EN: This Datasheet/Document is presented by the manufacturer.

Please visit our website for pricing and availability at www.hestore.hu.

MEAN WELL PRODUCT CATALOG

MEAN WELL

Your Reliable Power Partner

Standard Switching Power Supply Manufacturer

2015
October

www.meanwell.com

2015 October

New Products Overview

RSP-1600

Page 14

1600W 1U Low Profile Enclosed Type

- 90~264VAC input with PFC
- High power density (25W/inch^3)
- Adjustable Vo and Io
- Active current sharing up to 9600W
- Built-in remote ON-OFF control and remote sense function
- High efficiency up to 93%
- Dimension:300 x 85 x 41mm
- 5 years warranty

EPP-200/400

Page 50

200/400W Industrial Type

- 80~264VAC input with PFC
- No load power consumption<0.5W
- Compact size (4"x2", 5"x3")
- Class I or Class II installations
- Built-in 12V/0.5A auxiliary output
- 3 years warranty

RPS-30/45/65/ 120/200/400

Page 36-37

30~400W Medical Type

- 80~264VAC input
- No load power consumption <0.1~0.5W
- Compact size (3"x2", 4"x2", 5"x 3")
- Class I or Class II installations
- Low leakage current <100~250uA
- Suitable for BF application (2xMOPP)
- 3 years warranty

GE30

Page 51

30W Interchangeable Industrial Adaptor

- Interchangeable AC plugs
- 90~264VAC input
- No load power consumption<0.075W
- Energy efficiency level VI
- Comply with EISA2007/DoE and EU ErP
- 2 years warranty

IRM-01/02/03

Page 46

1~3W On Board Encapsulated Type

- 85~264VAC input
- No load power consumption <0.075W
- Miniature size (PCB mounting type and SMD type)
- Comply with EN55022 Class B without any additional components
- Withstand 5G vibration
- 3 years warranty

SGA12/18/25

Page 59

12~25W Slim Industrial Adaptor

- 90~264VAC input
- No load power consumption <0.075W
- Energy efficiency Level VI
- Comply with EISA2007/DoE, EU ErP
- Ultra slim, model width— 12W: 27.4mm; 18/25W: 32mm
- 3 years warranty

EPS-45A/65A/120

Page 48-49

45~120W Industrial Type

- 80~264VAC input
- No load power consumption<0.1~0.3W
- Compact size (3"x2", 4"x2")
- Class I or Class II installations
- 3 years warranty

RCP-1600

Page 70

1600W 1U Low Profile Rack Power

- 90~264VAC input with PFC
- High power density (25W/inch^3)
- Adjustable Vo and Io
- Active current sharing up to 24000W
- Built-in remote ON-OFF control and remote sense function
- High efficiency up to 93%
- I^{2}C and PMBus protocol
- Dimension:300 x 85 x 41mm
- 5 years warranty

INDEX

MEAN WELL

■Enclosed Switching Power Supply

G3 Series	RS-15 / 25 / 35 / 50 / 75 / 100 / 150	2~3
	RD-35 / 50 / 65 / 85 / 125	
	RID-50 / 65 / 85 / 125, RT-50 / 65 / 85 / 125	
	RQ-50 / 65 / 85 / 125	
NE Series	NES-15 / 25 / 35 / 50 / 75 / 100 / 150	4~5
	NED-35 / 50 / 75 / 100, NET-35 / 50 / 75	
	NES-200, NES-350	
SE Series	SE-100, SE-200, SE-350, SE-450	6
	SE-600, SE-1000, SE-1500,	7
LRS Series	LRS-35, LRS-50, LRS-75, LRS-100	8
	LRS-150F, LRS-150, LRS-200, LRS-350	9
PFC Series	SP-75, SP-100, SP-150, SP-200, SP-240	10
	SP-320, SP-480, PSP-600, SP-750	11
	RSP-75, RSP-100, RSP-150, RSP-200	12
	RSP-320, RSP-500, RSP-750	13
	RSP-1000 / 1500 / 1600	14
	RSP-2000 / 2400 / 3000	15
	RST-5000, RST-10000	16
	SPV-150 / 300 / 1500 *Output Voltage Programmable*	17
	TP-75, TP-100, QP-100, TP-150,	18~19
	QP-150, QP-200, QP-320	
	HRP-75, HRP-100, HRP G-150, HRP G-200	20
	HRP G-300, HRP G-450, HRP G-600	21
	MSP-100 / 200 / 300 / 450 / 600	22
U-bracket	USP-150, USP-225, USP-350, USP-500	23
DIN Series	MDR-10 / 20 / 40 / 60 / 100	24
	DR-15, DR-30, DR-60, DR-100	25
	DR-45, DR-75, DR-120,	26
	DRP-240, DRP-480, DRP-480S	
	DRH-120, DRT-240, DRT-480, DRT-960	27
	EDR-75, EDR-120, EDR-150	28
	NDR-75, NDR-120, NDR-240, NDR-480	29
	SDR-75 / 120 / 240 / 480 P / 960	30
	WDR-120, WDR-240, WDR-480	31
	TDR-960, DRA-40, DRA-60	32
	DR-RDN20, DR-UPS40	33

■Open Frame Switching Power Supply

Medical Type	PM-05, PM-10, PM-15, PM-20	34
	NFM-05, NFM-10, NFM-15, NFM-20	35
	RPS-30/45/65, RPS/D/T-60, RPS-120/200-x -C	36
	RPS / D / T-75, RPS G / D / T-160,	37
	RPS-300 / 400-x -C	
	MPS-30, MPS / D / T-45, MPS / D / T-65	38
	MPS / D / T / Q-200	39
Industrial Type	PS-05, PS-15, PS-25, PD-25, PS-35	40
	PS-45, PD-45, PT-45, PT-4503 / 6503	41
	PS / PD / PT-65, RPD-65 -C, RPT-65 -C	42
	PD-110, PPS-125, PPT-125	43
	ASP-150, PPS-200, PID-250 -C	44
	LPS-50 / 75 / 100, LPP-100 / 150	45
	IRM-01-x S / 02-x S / 03-x S / 05 / 10 / 15 / 20	46
	IRM-30 / 45 / 60-x ST	47
	EPS-15, EPS-25/35, EPS-45S , EPS-65S	48
	EPS-45 / 65-x -C / EPS-120 ,ELP-75-x -C ,	49
	EPP-100 / 150 / 200 / 300 / 400	50

■External Switching Power Supply

Industrial Adaptor	GE12 / 18 / 24 / 30 *Interchangeable AC Plug*	51
	GS06E/U, GS12E/U, GS05E/U-USB, GS15A/B/E/U	52
	GS18A/B/E/U, GS25A/B/E/U, GS36E/U	53
	GS40A, GS60A, GS90A, GS120A	54
	GS160A, GS220A, GS280A	55
	GST18A/B/E/U, GST25A/B/E/U, GST36B/E/U	56
Industrial Adaptor	GST40A / 60A / 90A / 120A	57
	GST160A / 220A / 280A	58
	SGA12E / U, 18E / U, 25E / U	59
	SGA40E / U, SGA60E / U, P25/50	60
Medical Adaptor	GEM18I *Interchangeable AC Plug 2* *Optional DC Plug List*	61
	GSM06E / U, GSM18B / E / U,	62
	GSM25B / E / U,GSM36B / E / U	
	GSM40A/B, GSM60A/B, GSM90B	63
	GSM120B, GSM160B, GSM220B	64
Moistureproof Adaptor	OWA-60E / U, OWA-90E / U	65
	OWA-120E / U	
Green Charger	GC30B/U/E, GC120 / 160 / 220 / 330	66
Charger	PA-120, PB-120	67
	ESC/P-120/240, PB-230, PB-300/360 P	68
	PB-600/1000, HEP-600C *2/3/8 Stage Charging*	69
19" Rack Power	RCP-1000, RCP-1U , RCP-1600, RHP-1U	70
	RCP-2000, RKP-1U , RKP-CMU1,	71
	RKP-1U -CMU1	
Modular Series	MP450, MP650, MP1K0	72~73
	MS-75 / 150 / 210 / 300 / 360, MD-100	

■Specific Purpose Power Supply

LED Sign Panel	ERP-350, HSN-200/300, NEL-200/300/400	74
	HSP-150 / 200 / 250 / 300, HDP-190 / 240	75
Harsh Environment	HEP-100, HEP-150, HEP-185	76
	HEP-240, HEP-320, HEP-600	77
Security Series	DRC-40, DRC-60, DRC-100	78
	PSC-35-x-C, PSC-60-x-C, PSC-100-x-C, PSC-160-x-C	79
	ADS-55, AD-55, ADD-55,	80
	ADS-155, AD-155, ADD-155	
	SCP-35, SCP-50, SCP-75, IPC-250, IPC-300	81

■DC/DC Converter

Module Type	SRS, SUS01	82
	SBT01, SFT01, DET01	83
	SPR01, SMU01, SMA01	84
	SPU02, SPU03, SPA02, SPB03, SPB05	85
	SCW03, DCW03, SCW05, DCW05	86
	SLW05, DLW05, SCW08, DCW08	87
	SKE10, DKE10, SCW12, DCW12	88
	SKM15, SKA15, DKA15	89
	SKE15, DKE15, SKA20, SKM30	90
	SDM30, DKA30, TKA30	91
	SKM50, SKA40, SKA60	92
	MHB75, MHB100 *Heat Sink for MHB Series*	93
	MHB150	94
On Board Type	NSD05	94
	NSD10-S, NSD10-D, NSD15-S, NSD15-D	95
	NID30, NID60	96
PCB Type	PSD-05, PSD-15	96
	PSD-30, PSD-45	97
Enclosed Type	SD-15, SD-25	97
	SD-50, SD-100, SD-150, SD-200	98
	SD-350, SD-500, SD-1000 *RPB-1600*	99
	RSD-100, RSD-150, RSD-200, RSD-300	100
Other Power Solutions	LED Power Family / Inverter Family	101

■Accessories / Case Drawing

Case Drawing	Case 901 / 902 / 903 / 905 / 906 / 907	102
	Case 910A / 912 / 915A / 916(A/B) / 920A / 926A	103
	Case 928A / 929A / 931A / 932A / 935A / 939A	104
	Case 940A / 941B / 943A / 946A / 952B / 971A	105
	Case 977A / 978A / 980A / 986A / 987A / 995A	106
	Case 206A / 207A / 238A / 239A / 240A / 241A	107
Accessories	DRL-01 / 02 / 03A, DRP-01 / 01A / 02 / 03 / 04	108
	MHS012 / 013 / 014 / 025 / 026 / 027	
	TBC-05 / 07 / 08 / 09	

: New Announced
: New Product within 1 Year
: Under Development
: Supplementary Information

Enclosed-G3 Series

High Reliability Compact

RS-150 RD/ID/T/Q-125 | RS-100 RD/ID/T/Q-85 | RS-75 RD/ID/T/Q-65 | RS-50 RD/ID/T/Q-50 | RS-35 RD-35 | RS-25 | RS-15

Features

- No load power consumption <0.5W (RS-15~75)
- All using 105°C long life electrolytic capacitors
- Protections: Short circuit / Overload / Over voltage / Over Temp.(RS-15)
- Meet EMS EN50082-2/EN61000-6-2 heavy industry level (35~150W)
- Withstand 300VAC surge input for 5 sec.
- High operating temperature up to 70°C
- Withstand 5G vibration test
- Miniature size
- Long life and high reliability
- LED indicator for power on
- 100% full load burn-in test
- Suitable for critical applications
- 3 years warranty

(RS-50 only)

General Specification (Please refer to www.meanwell.com for detail spec.)

Model No.	RS-15	RS-25	RS-35 RD-35	RS-50 RD / ID / T / Q-50	RS-75 RD / ID / T / Q-65	RS-100 RD / ID / T / Q-85	RS-150 RD / ID / T / Q-125
AC input voltage range	85~264VAC, 120~370VDC	88~264VAC, 125~373VDC					115 / 230VAC by switch
AC inrush current (max.)	Cold start, 65A at 230VAC	30A at 230VAC	36A at 230VAC	33A at 230VAC	40A at 230VAC		
DC adjustment range	±10% by potentiometer for single output; CH1 -5%~+10% by potentiometer for multiple output						
Overload protection	>105%, hiccup mode	110%~180%	110%~150% hiccup mode, auto-recovery (150% ~190% for RID-125-1205/2405)				
Over voltage protection	115%~135%, shut off	115%~135% rated output voltage, hiccup mode, auto-recovery					
Withstand voltage	I/P - O/P: 3kVAC, I/P - FG: 1.5kVAC, O/P - FG: 0.5kVAC, 1 minute						
Working temperature	-20~+70°C		-25~+70°C (refer to the derating curve for different models)				
Vibration	10~500Hz, 5G 10min. /1 cycle, period for 60 min. each along X, Y, Z axes						
Safety standards	UL60950-1, TUV EN60950-1, CCC GB4943(RS-50 only) approved						
EMC standards	EN55022 class B, EN61000-3-2,3, EN61000-4-2,3,4,5,6,8,11, EN61000-6-2 (EN50082-2) (35~150W); GB9254 for RS-50 only						
Connection	Terminal block for input and output						
Dimension (LxWxH)(mm)	62.5x 51x 28	78x 51x 28	99x 82x 36	99x 97x 36	129x 97x 38	159x 97x 38	199x 98x 38
Case No.	971A	931A	932A	905B	903	901C	902A
Packing	108pcs /15.0kg	60pcs /13.0kg	45pcs /14.0kg	45pcs /19.5kg	30pcs /13.3kg	24pcs /15.4kg	20pcs /15kg

15W — Single Output

Model No.	Output	Tol.	R&N	Effi.
RS-15-3.3	3.3V, 0~3.0A	±3%	80mV	72%
RS-15-5	5V, 0~3.0A	±2%	80mV	77%
RS-15-12	12V, 0~1.3A	±1%	120mV	81%
RS-15-15	15V, 0~1.0A	±1%	120mV	81%
RS-15-24	24V, 0~0.625A	±1%	200mV	82%
RS-15-48	48V, 0~0.313A	±1%	200mV	82%

25W — Single Output

Model No.	Output	Tol.	R&N	Effi.
RS-25-3.3	3.3V, 0~6.0A	±3%	80mV	73.5%
RS-25-5	5V, 0~5.0A	±2%	80mV	78.5%
RS-25-12	12V, 0~2.1A	±1%	120mV	81.5%
RS-25-15	15V, 0~1.7A	±1%	120mV	83.5%
RS-25-24	24V, 0~1.1A	±1%	120mV	86.0%
RS-25-48	48V, 0~0.57A	±1%	200mV	85.0%

35W — Single Output

Model No.	Output	Tol.	R&N	Effi.
RS-35-3.3	3.3V, 0~7.0A	±3%	80mV	76.5%
RS-35-5	5V, 0~7.0A	±2%	80mV	80.5%
RS-35-12	12V, 0~3.0A	±1%	120mV	84.5%
RS-35-15	15V, 0~2.4A	±1%	120mV	86.0%
RS-35-24	24V, 0~1.5A	±1%	120mV	88.0%
RS-35-48	48V, 0~0.8A	±1%	200mV	88.5%

50W — Single Output

Model No.	Output	Tol.	R&N	Effi.
RS-50-3.3	3.3V, 0~10A	±3%	80mV	78.0%
RS-50-5	5V, 0~10A	±2%	80mV	83.0%
RS-50-12	12V, 0~4.2A	±1%	120mV	84.5%
RS-50-15	15V, 0~3.4A	±1%	120mV	86.0%
RS-50-24	24V, 0~2.2A	±1%	120mV	88.0%
RS-50-48	48V, 0~1.1A	±1%	200mV	89.0%

75W — Single Output

Model No.	Output	Tol.	R&N	Effi.
RS-75-3.3	3.3V, 0~15A	±3%	80mV	75.0%
RS-75-5	5V, 0~12A	±2%	80mV	79.0%
RS-75-12	12V, 0~6.0A	±1%	120mV	84.5%
RS-75-15	15V, 0~5.0A	±1%	120mV	86.0%
RS-75-24	24V, 0~3.2A	±1%	120mV	88.5%
RS-75-48	48V, 0~1.6A	±1%	200mV	89.5%

100W — Single Output

Model No.	Output	Tol.	R&N	Effi.
RS-100-3.3	3.3V, 0~20A	±3%	80mV	74%
RS-100-5	5V, 0~16A	±2%	80mV	77%
RS-100-12	12V, 0~8.5A	±1%	120mV	81%
RS-100-15	15V, 0~7.0A	±1%	120mV	82%
RS-100-24	24V, 0~4.5A	±1%	120mV	84%
RS-100-48	48V, 0~2.3A	±1%	200mV	84%

150W — Single Output

Model No.	Output	Tol.	R&N	Effi.
RS-150-3.3	3.3V, 0~30A	±3%	80mV	74%
RS-150-5	5V, 0~26A	±2%	80mV	78%
RS-150-12	12V, 0~12.5A	±1%	120mV	83%
RS-150-15	15V, 0~10A	±1%	120mV	84%
RS-150-24	24V, 0~6.5A	±1%	120mV	86%
RS-150-48	48V, 0~3.3A	±1%	200mV	87%

Enclosed-G3 Series

35W — Dual Output

Model No.	Output	Tol.	R&N	Effi.	Max.
RD-35A	5V, 0.3~4.0A	±2%	80mV	79%	32W
	12V, 0.2~1.0A	±6%	120mV		
RD-35B	5V, 0.3~4.0A	±2%	80mV	82%	35W
	24V, 0.2~1.3A	±5%	120mV		
RD-3513	13.5V, 0.3~2.0A	±4%	120mV	80%	35W
	-13.5V, 0.2~0.57A	±4%	120mV		

50W — Dual Output (Output isolated for RID-50A/B)

Model No.	Output	Tol.	R&N	Effi.	Max.
RD-50A	5V, 0.3~6.0A	±2%	80mV	79%	54W
	12V, 0.3~3.0A	±7%	120mV		
RD-50B	5V, 0.3~6.0A	±2%	80mV	80%	54W
	24V, 0.2~2.0A	+8%, -4%	120mV		

65W — Dual Output (Output isolated for RID-65A/B)

Model No.	Output	Tol.	R&N	Effi.	Max.
RD-65A	5V, 0.3~8.0A	±2%	80mV	79%	66W
	12V, 0.2~4.0A	±6%	120mV		
RD-65B	5V, 0.3~8.0A	±2%	80mV	78%	68W
	24V, 0.2~3.0A	+4%, -6%	150mV		

85W — Dual Output (Output isolated for RID-85A/B)

Model No.	Output	Tol.	R&N	Effi.	Max.
RD-85A	5V, 2.0~10A	±2%	80mV	78%	88W
	12V, 0.3~5.0A	±5%	120mV		
RD-85B	5V, 2.0~10A	±2%	80mV	80%	88W
	24V, 0.3~2.5A	±5%	120mV		

125W — Dual Output

Model No.	Output	Tol.	R&N	Effi.	Max.
RD-125A	5V, 2.0~15A	±5%	80mV	82%	131W
	12V, 0.5~10A	±7%	120mV		
RD-125B	5V, 2.0~10A	±5%	80mV	85%	133W
	24V, 0.4~5.0A	±7%	120mV		

125W — Dual Output (Output isolated for RID-125)

Model No.	Output	Tol.	R&N	Effi.	Max.
RD-125-1224	12V, 1.0~7.0A	±2%	120mV	85%	133W
	24V, 0.4~5.0A	+8%, -5%	200mV		
RD-125-2412	24V, 0.5~5.0A	±2%	200mV	85%	133W
	12V, 1.0~7.0A	±10%	120mV		
RD-125-1248	12V, 1.0~7.0A	±2%	120mV	86%	138W
	48V, 0.2~2.5A	+8%, -5%	240mV		
RD-125-4812	48V, 0.3~2.5A	±2%	240mV	86%	138W
	12V, 1.0~7.0A	±10%	120mV		
RD-125-2448	24V, 0.5~4.0A	±1%	200mV	86%	144W
	48V, 0.2~2.5A	±4%	240mV		
RD-125-4824	48V, 0.3~2.5A	±1%	240mV	86%	144W
	24V, 0.5~4.0A	±8%	240mV		
RID-125-1205	12V, 2.0~10.5A	±2%	120mV	80%	125W
	5V, 0.0~3.0A	±3%	80mV		
RID-125-2405	24V, 2.0~5.3A	±2%	120mV	83%	125W
	5V, 0.0~3.0A	±3%	80mV		

50W — Quad Output (RT-50 without -5V or -12V output)

Model No.	Output	Tol.	R&N	Effi.	Max.
RQ-50B	5V, 0.5~6.0A	±2%	80mV	74%	46W
	12V, 0.2~1.5A	±6%	120mV		
	-5V, 0.0~1.0A	±3%	100mV		
	-12V, 0.0~1.0A	±3%	80mV		
RQ-50C	5V, 0.5~6.0A	±2%	80mV	75%	50W
	15V, 0.2~1.5A	±6%	120mV		
	-5V, 0.0~1.0A	±3%	100mV		
	-15V, 0.0~1.0A	±3%	80mV		
RQ-50D	5V, 0.5~6.0A	±2%	80mV	79%	53W
	12V, 0.2~1.5A	±6%	120mV		
	24V, 0.1~1.0A	+7%, -5%	180mV		
	-12V, 0.0~1.0A	±3%	80mV		

65W — Quad Output (RT-65 without -5V or -12V output)

Model No.	Output	Tol.	R&N	Effi.	Max.
RQ-65B	5V, 0.5~8.0A	±2%	80mV	76%	63W
	12V, 0.2~3.0A	+9%, -5%	120mV		
	-5V, 0.0~1.0A	±5%	80mV		
	-12V, 0.0~1.0A	±5%	80mV		
RQ-65C	5V, 0.5~8.0A	±2%	80mV	76%	65W
	15V, 0.2~3.0A	+10%, -4%	120mV		
	-5V, 0.0~1.0A	±5%	80mV		
	-15V, 0.0~1.0A	±5%	80mV		
RQ-65D	5V, 0.5~8.0A	±2%	80mV	78%	68W
	12V, 0.2~3.0A	±6%	120mV		
	24V, 0.1~1.5A	±8%	180mV		
	-12V, 0.0~1.0A	±5%	80mV		

85W — Quad Output (RT-85 without -5V or -12V output)

Model No.	Output	Tol.	R&N	Effi.	Max.
RQ-85B	5V, 2.0~10A	±2%	80mV	76%	81W
	12V, 0.3~4.0A	+7%, -3%	120mV		
	-5V, 0.0~1.0A	±8%	100mV		
	-12V, 0.0~1.0A	±5%	80mV		
RQ-85C	5V, 2.0~10A	±2%	80mV	77%	83W
	15V, 0.3~4.0A	+3%, -7%	120mV		
	-5V, 0.0~1.0A	±8%	100mV		
	-15V, 0.0~1.0A	±5%	80mV		
RQ-85D	5V, 2.0~10A	±2%	80mV	78%	84W
	12V, 0.3~4.0A	+7%, -3%	120mV		
	24V, 0.1~1.5A	±8%	150mV		
	-12V, 0.0~1.0A	±5%	80mV		

125W — Quad Output (RT-125 without -5V or -12V output)

Model No.	Output	Tol.	R&N	Effi.	Max.
RQ-125B	5V, 2.0~12A	±2%	80mV	79%	120W
	12V, 0.5~4.5A	+8%, -3%	120mV		
	-5V, 0.1~1.0A	+6%, -10%	80mV		
	-12V, 0.0~1.0A	±5%	80mV		
RQ-125C	5V, 2.0~12A	±2%	80mV	80%	123W
	15V, 0.5~4.0A	+8%, -3%	120mV		
	-5V, 0.1~1.0A	+6%, -10%	80mV		
	-15V, 0.0~1.0A	±5%	80mV		
RQ-125D	5V, 2.0~12A	±2%	80mV	82%	124W
	12V, 0.5~4.0A	+8%, -3%	120mV		
	24V, 0.1~2.5A	±8%	150mV		
	-12V, 0.0~1.0A	±5%	80mV		

Enclosed-NE Series

15~350W Compact

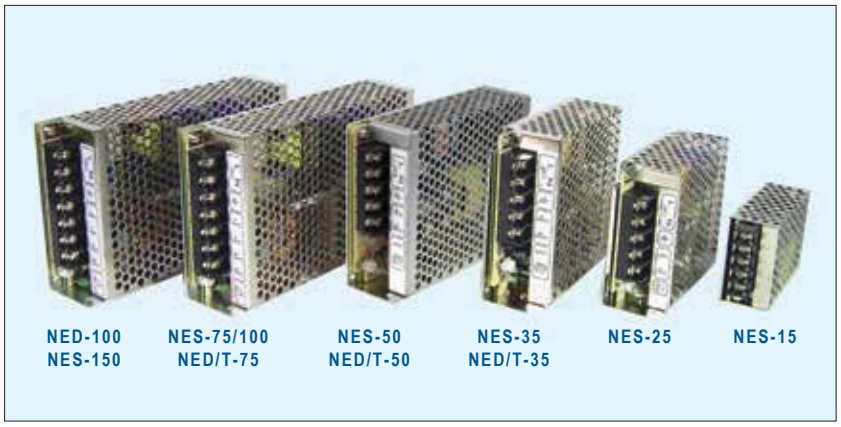

Features

- Universal AC input / Full range
  (NES/D-100, NES-150 AC input selectable by switch)
- Protections: Short circuit / Overload / Over voltage
- Built-in over temperature protection for NES-15
- Cooling by free air convection
- 100% full load burn-in test
- 2 years warranty

General Specification (Please refer to www.meanwell.com for detail spec.)

(NES-150 only) (NES only)

Model No.	NES-15	NES-25	NES-35 NED/T-35	NES-50 NED/T-50	NES-75 NED/T-75	NES-100	NES-150 NED-100
AC input voltage range	85~264VAC; 120~370VDC					115/230VAC by switch	
AC inrush current (max.)	Cold start, 45A at 230VAC						
DC adjustment range	±10% by potentiometer for single output; CH1 -5%~+10% by potentiometer for multiple output					-5%~+10% (NES-100/150) CH1 -5%~+10% (NED-100)	
Overload protection	>105%	110%~150% hiccup mode, auto-recovery					
Over voltage protection	115%~135% rated output voltage, shut off					115%~135% hiccup mode, auto-recovery	
Withstand voltage	I/P - O/P: 3kVAC, I/P - FG: 2kVAC, O/P - FG: 0.5kVAC, 1 minute						
Working temperature	-20~+60°C (refer to the derating curve for different models)						
Vibration	10~500Hz, 2G 10min. /1 cycle, period for 60 min. each along X, Y, Z axes						
Safety standards	UL60950-1, EN60950-1(NES-150 only), GB4943(NES only) approved, also design refer to TUV EN60950-1						
EMC standards	EN55022 class B, EN61000-3-2,3, EN61000-4-2,3,4,5,6,8,11, GB9254(NES only)						
Connection	Terminal block for input and output						
Dimension (LxWxH)(mm)	78x 51x 28	99x 82x 35	99x 97x 36	129x 98x 38	159x 97x 38	159x 97x 38	199x 98x 38
Case No.	931A	932B	905	903	901	901	902
Packing	60pcs/11.8kg	45pcs/14.5kg	45pcs/17.2kg	45pcs/21kg	30pcs/16.6kg	30pcs/17.5kg	20pcs/15kg

15W — Single Output

Model No.	Output	Tol.	R&N	Effi.
NES-15-5	5V, 0~3.0A	±2%	150mV	79%
NES-15-12	12V, 0~1.3A	±1%	150mV	81%
NES-15-15	15V, 0~1.0A	±1%	150mV	81%
NES-15-24	24V, 0~0.7A	±1%	200mV	85%
NES-15-48	48V, 0~0.35A	±1%	240mV	82%

25W — Single Output

Model No.	Output	Tol.	R&N	Effi.
NES-25-5	5V, 0~5.0A	±2%	80mV	78%
NES-25-12	12V, 0~2.1A	±1%	120mV	83%
NES-25-15	15V, 0~1.7A	±1%	150mV	84%
NES-25-24	24V, 0~1.1A	±1%	200mV	86%
NES-25-48	48V, 0~0.57A	±1%	240mV	86%

35W — Single Output

Model No.	Output	Tol.	R&N	Effi.
NES-35-5	5V, 0~7.0A	±2%	80mV	78%
NES-35-12	12V, 0~3.0A	±1%	120mV	81%
NES-35-15	15V, 0~2.4A	±1%	150mV	83%
NES-35-24	24V, 0~1.5A	±1%	200mV	85%
NES-35-48	48V, 0~0.8A	±1%	240mV	86%

50W — Single Output

Model No.	Output	Tol.	R&N	Effi.
NES-50-5	5V, 0~10A	±2%	80mV	79%
NES-50-12	12V, 0~4.2A	±1%	120mV	82%
NES-50-15	15V, 0~3.4A	±1%	150mV	83%
NES-50-24	24V, 0~2.2A	±1%	200mV	86%
NES-50-48	48V, 0~1.1A	±1%	240mV	87%

75W — Single Output

Model No.	Output	Tol.	R&N	Effi.
NES-75-5	5V, 0~14A	±2%	80mV	77%
NES-75-12	12V, 0~6.2A	±1%	120mV	82%
NES-75-15	15V, 0~5.0A	±1%	150mV	83%
NES-75-24	24V, 0~3.2A	±1%	200mV	86%
NES-75-48	48V, 0~1.6A	±1%	240mV	87%

100W — Single Output

Model No.	Output	Tol.	R&N	Effi.
NES-100-5	5V, 0~20A	±2%	80mV	80%
NES-100-7.5	7.5V, 0~13.6A	±1%	120mV	81%
NES-100-9	9V, 0~11.2A	±1%	120mV	81%
NES-100-12	12V, 0~8.5A	±1%	120mV	83%
NES-100-15	15V, 0~7.0A	±1%	120mV	84%
NES-100-24	24V, 0~4.5A	±1%	120mV	86%
NES-100-48	48V, 0~2.3A	±1%	150mV	86%

150W — Single Output

Model No.	Output	Tol.	R&N	Effi.
NES-150-3.3	3.3V, 0~30A	±3%	80mV	73%
NES-150-5	5V, 0~26A	±2%	80mV	78%
NES-150-7.5	7.5V, 0~20A	±1%	120mV	80%
NES-150-9	9V, 0~16.7A	±1%	120mV	83%
NES-150-12	12V, 0~12.5A	±1%	120mV	83%
NES-150-15	15V, 0~10A	±1%	120mV	83%
NES-150-24	24V, 0~6.5A	±1%	120mV	86%
NES-150-48	48V, 0~3.3A	±1%	200mV	86%

Enclosed-NE Series

35W — Dual Output

Model No.	Output	Tol.	R&N	Effi.	Max.
NED-35A	5V, 0.5~5.0A	±2%	80mV	78%	32W
	12V, 0.1~1.5A	±6%	120mV		
NED-35B	5V, 0.5~4.0A	±2%	80mV	81%	35W
	24V, 0.2~1.3A	±6%	200mV		

50W — Dual Output

Model No.	Output	Tol.	R&N	Effi.	Max.
NED-50A	5V, 1.0~6.0A	±2%	80mV	79%	54W
	12V, 0.3~3.0A	±6%	120mV		
NED-50B	5V, 1.0~6.0A	±2%	80mV	82%	54W
	24V, 0.2~2.0A	±6%	200mV		

75W — Dual Output

Model No.	Output	Tol.	R&N	Effi.	Max.
NED-75A	5V, 1.0~8.0A	±2%	80mV	78%	71W
	12V, 0.3~4.0A	±6%	120mV		
NED-75B	5V, 1.0~6.0A	±2%	80mV	81%	73W
	24V, 0.2~3.0A	±6%	200mV		

100W — Dual Output (Output isolated for NED-100 GD)

Model No.	Output	Tol.	R&N	Effi.	Max.
NED-100A	5V, 2~10A	±2%	80mV	80%	100W
	12V, 0.7~7.0A	±10%	120mV		
NED-100B	5V, 1~10A	±2%	80mV	82%	100W
	24V, 0.3~3.5A	±8%	200mV		
NED-100C	12V, 0~8.0A	±2%	120mV	80%	99W
	5V, 0~3.0A	±3%	80mV		
NED-100D	24V, 0~4.0A	±2%	120mV	82%	99W
	5V, 0~3.0A	±3%	80mV		

35W — Triple Output

Model No.	Output	Tol.	R&N	Effi.	Max.
NET-35A	5V, 0.5~4.0A	±2%	80mV	78%	30W
	12V, 0.1~1.5A	±6%	120mV		
	-5V, 0.1~0.5A	±6%	120mV		
NET-35B	5V, 0.5~4.0A	±2%	80mV	79%	33W
	12V, 0.1~1.5A	±6%	120mV		
	-12V, 0.1~0.5A	±6%	120mV		
NET-35C	5V, 0.5~3.5A	±2%	80mV	79%	35W
	15V, 0.1~1.5A	±8%	150mV		
	-15V, 0.1~0.5A	±8%	150mV		
NET-35D	5V, 0.5~3.5A	±2%	80mV	79%	37W
	24V, 0.1~1.0A	±8%	200mV		
	12V, 0.1~1.0A	±8%	120mV		

50W — Triple Output

Model No.	Output	Tol.	R&N	Effi.	Max.
NET-50A	5V, 0.6~5.0A	±2%	80mV	76%	47W
	12V, 0.2~2.5A	±6%	120mV		
	-5V, 0.1~0.7A	±5%	120mV		
NET-50B	5V, 0.6~5.0A	±2%	80mV	78%	50W
	12V, 0.2~2.5A	±6%	120mV		
	-12V, 0.1~0.7A	±5%	120mV		
NET-50C	5V, 0.6~5.0A	±2%	80mV	78%	50W
	15V, 0.1~2.0A	±8%	150mV		
	-15V, 0.1~0.7A	±5%	150mV		
NET-50D	5V, 0.6~5.0A	±2%	80mV	80%	51W
	24V, 0.1~1.5A	±8%	200mV		
	12V, 0.1~1.5A	±6%	120mV		

75W — Triple Output

Model No.	Output	Tol.	R&N	Effi.	Max.
NET-75A	5V, 0.6~7.0A	±2%	80mV	77%	69W
	12V, 0.2~3.5A	±6%	120mV		
	-5V, 0.1~0.7A	±5%	120mV		
NET-75B	5V, 0.6~7.0A	±2%	80mV	78%	65W
	12V, 0.2~3.5A	±6%	120mV		
	-12V, 0.1~0.7A	±5%	120mV		
NET-75C	5V, 0.6~7.0A	±2%	80mV	78%	72W
	15V, 0.1~3.5A	±8%	150mV		
	-15V, 0.1~0.7A	±5%	150mV		
NET-75D	5V, 0.6~6.0A	±2%	80mV	80%	73W
	24V, 0.1~2.0A	±8%	200mV		
	12V, 0.1~1.5A	±6%	120mV		

210W Single Output Switching Power Supply

CASE: 912E 215x 115x 50 mm

- AC input selectable by switch
- Withstand 300VAC surge input for 5 seconds
- Protections: Short circuit / Overload Over voltage / Over temp.
- Cooling by free air convection
- Built-in constant current limiting circuit
- 100% full load burn-in test
- LED indicator for power on
- Low cost, high reliability
- 2 years warranty

AC input voltage range ..... 90~132VAC / 180~264VAC selectable by switch
DC adjustment range ..... ±10% rated output range
Overload protection ..... 105%~150% constant current limiting, auto-recovery
Over voltage protection ..... 115%~145% rated output voltage
Setup, rise, hold up time ..... 1000ms, 50ms, 20ms at full load and 230VAC
Withstand voltage ..... I/P - O/P: 3kVAC, I/P-FG: 1.5kVAC, O/P-FG: 0.5kVAC
Working temperature ..... -20~+50°C (refer to output derating curve)
Safety standards ..... UL60950-1 approved
Packing ..... 0.93kg ; 12pcs / 12kg / 0.92CUFT

Model No.	Output	Tol.	R&N	Effi.
NES-200-3.3	3.3V, 0~40A	±2%	150mV	75%
NES-200-5	5V, 0~40A	±2%	150mV	79%
NES-200-7.5	7.5V, 0~27A	±2%	150mV	82%
NES-200-12	12V, 0~17A	±1%	150mV	85%
NES-200-15	15V, 0~14A	±1%	150mV	85%
NES-200-24	24V, 0~8.8A	±1%	150mV	87%
NES-200-27	27V, 0~7.8A	±1%	200mV	88%
NES-200-36	36V, 0~5.9A	±1%	240mV	89%
NES-200-48	48V, 0~4.4A	±1%	240mV	89%

350W Single Output Switching Power Supply

CASE: 912C 215x 115x 50 mm

- AC input selectable by switch
- Withstand 300VAC surge input for 5 seconds
- Protections: Short circuit / Overload Over voltage / Over temp.
- Forced air cooling by built-in DC fan
- Built-in fan ON/OFF control
- Built-in constant current limiting circuit
- 100% full load burn-in test
- LED indicator for power on
- Low cost, high reliability
- 2 years warranty

AC input voltage range ..... 90~132VAC / 180~264VAC selectable by switch
DC adjustment range ..... ±10% rated output range
Overload protection ..... 105%~135% constant current limiting, auto-recovery
Over voltage protection ..... 115%~145% rated output voltage
Setup, rise, hold up time ..... 1000ms, 50ms, 20ms at full load and 230VAC
Withstand voltage ..... I/P - O/P: 3kVAC, I/P-FG: 2kVAC, O/P-FG: 0.5kVAC
Working temperature ..... -20~+60°C (refer to output derating curve)
Safety standards ..... UL60950-1 approved
Packing ..... 1.07kg ; 12pcs / 13.5kg / 0.92CUFT

Model No.	Output	Tol.	R&N	Effi.
NES-350-3.3	3.3V, 0~60A	+3%, -4.5%	150mV	74.0%
NES-350-5	5V, 0~60A	±3.0%	150mV	78.0%
NES-350-7.5	7.5V, 0~46A	±2.0%	150mV	80.0%
NES-350-12	12V, 0~29A	±1.5%	150mV	83.0%
NES-350-15	15V, 0~23.2A	±1.0%	150mV	84.0%
NES-350-24	24V, 0~14.6A	±1.0%	150mV	87.0%
NES-350-27	27V, 0~13A	±1.0%	200mV	88.0%
NES-350-36	36V, 0~9.7A	±1.0%	240mV	87.5%
NES-350-48	48V, 0~7.3A	±1.0%	240mV	87.5%

Enclosed-SE Series 100~450W Single Output

Features

- AC input selectable by switch
- Withstand 300VAC surge input for 5 seconds (SE-200/350)
- Protections: Short circuit / Overload / Over voltage / Over temperature (except for SE-100)
- Forced air cooling by built-in DC fan (SE-350/450)
- Built-in fan ON/OFF control (SE-350)
- Built-in constant current limiting circuit (SE-200/350)
- Withstand 5G vibration test (SE-200/350)
- Built-in remote sense function (SE-450)
- 100% full load burn-in test
- LED indicator for power on
- 2 years warranty

General Specification (Please refer to www.meanwell.com for detail spec.)

Model No.		SE-100	SE-200	SE-350	SE-450
AC input voltage range		115/230VAC by switch			
AC inrush current (max.)		Cold start, 36A at 230VAC	Cold start, 55A at 230VAC	Cold start, 60A at 230VAC	Cold start, 55A at 230VAC
DC adjustment range		-5%~+10% rated output voltage	±10% rated output voltage		
Overload protection	Range	110%~150%	105%~150%	105%~135%	105%~150%
	Type	Hiccup mode, auto-recovery	Constant current limiting, auto-recovery		Shut down o/p voltage, re-power on to recover
Over voltage protection		115%~135%	115%~145%		
Withstand voltage		I/P - O/P: 3kVAC, I/P - FG: 1.5kVAC, O/P-FG: 0.5kVAC			
Working temperature		-20~+60°C	-20~+50°C	-20~+60°C	-10~+60°C (refer to output derating curve)
Safety standards		UL60950-1, GB4943(SE-100 only) approved			
EMC standards		EN55022 class B, EN61000-3-2,3, EN61000-4-2,3,4,5,6,8,11, GB9254 for SE-100 only			
Connection		7P/9.5mm pitch terminal block	9P/9.5mm pitch terminal block with cover		9P/11mm pitch terminal block with cover
Dimension (LxWxH)(mm)		159x 97x 38	215x 115x 50		225x 124x 50
Case No.		901	912E	912C	986A
Packing		30pcs / 17.5kg	12pcs / 12kg	12pcs / 13.5kg	12pcs / 16kg

SE-100 Series

Model No.	Output	Tol.	R&N	Effi.
SE-100-5	5V, 0~20A	±2%	80mV	80%
SE-100-7.5	7.5V, 0~13.6A	±1%	120mV	81%
SE-100-9	9V, 0~11.2A	±1%	120mV	81%
SE-100-12	12V, 0~8.5A	±1%	120mV	83%
SE-100-15	15V, 0~7.0A	±1%	120mV	84%
SE-100-24	24V, 0~4.5A	±1%	120mV	86%
SE-100-48	48V, 0~2.3A	±1%	150mV	86%

SE-200 Series

Model No.	Output	Tol.	R&N	Effi.
SE-200-3.3	3.3V, 0~40A	±2%	150mV	75%
SE-200-5	5V, 0~40A	±2%	150mV	79%
SE-200-7.5	7.5V, 0~27A	±2%	150mV	82%
SE-200-12	12V, 0~17A	±1%	150mV	85%
SE-200-15	15V, 0~14A	±1%	150mV	85%
SE-200-24	24V, 0~8.8A	±1%	150mV	87%
SE-200-27	27V, 0~7.8A	±1%	200mV	88%
SE-200-36	36V, 0~5.9A	±1%	240mV	89%
SE-200-48	48V, 0~4.4A	±1%	240mV	89%

SE-350 Series

Model No.	Output	Tol.	R&N	Effi.
SE-350-3.3	3.3V, 0~60A	+3%, -4.5%	150mV	74.0%
SE-350-5	5V, 0~60A	±3.0%	150mV	78.0%
SE-350-7.5	7.5V, 0~46A	±2.0%	150mV	80.0%
SE-350-12	12V, 0~29A	±1.5%	150mV	83.0%
SE-350-15	15V, 0~23.2A	±1.0%	150mV	84.0%
SE-350-24	24V, 0~14.6A	±1.0%	150mV	87.0%
SE-350-27	27V, 0~13A	±1.0%	200mV	88.0%
SE-350-36	36V, 0~9.7A	±1.0%	240mV	87.5%
SE-350-48	48V, 0~7.3A	±1.0%	240mV	87.5%

SE-450 Series

Model No.	Output	Tol.	R&N	Effi.
SE-450-3.3	3.3V, 0~75A	±3%	200mV	74%
SE-450-5	5V, 0~75A	±3%	200mV	78%
SE-450-12	12V, 0~37.5A	±1%	200mV	83%
SE-450-15	15V, 0~30A	±1%	200mV	84%
SE-450-24	24V, 0~18.8A	±1.5%	200mV	86%
SE-450-36	36V, 0~12.5A	±1%	200mV	86%
SE-450-48	48V, 0~9.4A	±1%	200mV	88%

Enclosed-SE Series 600~1500W Single Output

Features

- AC input selectable by switch (SE-600/1000)
  AC input 180~264VAC only (SE-1500)
- Protections:
  Short circuit / Overload / Over voltage / Over temperature
- Forced air cooling by built-in DC fan
- Built-in remote sense function
- DC OK, remote ON/OFF control (SE-1000/1500)
- 100% full load burn-in test
- LED indicator for power on
- 2 years warranty

General Specification (Please refer to www.meanwell.com for detail spec.)

Model No.		SE-600	SE-1000	SE-1500
AC input voltage range		115/230VAC by switch		180~264VAC
AC inrush current (max.)		Cold start, 60A at 230VAC	Cold start, 55A at 230VAC	Cold start, 60A at 230VAC
DC adjustment range		±10% rated output voltage		
Overload protection	Range	105%~125%		
	Type	Shut down o/p voltage, re-power on to recover		
Over voltage protection		115%~140% Shut down o/p voltage, re-power on to recover		
Withstand voltage		I/P-O/P: 3kVAC, I/P-FG: 1.5kVAC, O/P-FG: 0.5kVAC	I/P-O/P: 3kVAC, I/P-FG: 2kVAC, O/P-FG: 0.5kVAC	I/P-O/P: 3kVAC, I/P-FG: 1.5kVAC, O/P-FG: 0.5kVAC
Working temperature		-20~+60°C (refer to output derating curve)		-20~+70°C (refer to output derating curve)
Safety standards		UL60950-1 approved		
EMC standards		Design refer to EN55022 class B		
Connection		Terminal block with cover for input and output (SE-1000/1500: bus bars for output)		
Dimension (LxWxH)(mm)		247x 127x 63.5	278x 127x 63.5	278x 177.8x 63.5
Case No.		926A	935B	982A
Packing		6pcs / 13.4kg	6pcs / 16kg	4pcs / 14.2kg

600W SE-600

Model No.	Output	Tol.	R&N	Effi.
SE-600-5	5V, 0~100A	±2%	150mV	78%
SE-600-12	12V, 0~50A	±1%	150mV	83%
SE-600-15	15V, 0~40A	±1%	150mV	84%
SE-600-24	24V, 0~25A	±1%	150mV	87%
SE-600-27	27V, 0~22.2A	±1%	150mV	87%
SE-600-36	36V, 0~16.6A	±1%	200mV	87%
SE-600-48	48V, 0~12.5A	±1%	200mV	88%

1000W SE-1000

Model No.	Output	Tol.	R&N	Effi.
SE-1000-5	5V, 0~150A	±1%	150mV	81%
SE-1000-9	9V, 0~100A	±1%	150mV	84%
SE-1000-12	12V, 0~83.3A	±1%	150mV	85%
SE-1000-15	15V, 0~66.7A	±1%	150mV	86%
SE-1000-24	24V, 0~41.7A	±1%	200mV	88%
SE-1000-48	48V, 0~20.8A	±1%	200mV	89%

1500W SE-1500

Model No.	Output	Tol.	R&N	Effi.
SE-1500-5	5V, 0~300A	±2%	150mV	81%
SE-1500-12	12V, 0~125A	±1%	150mV	85%
SE-1500-15	15V, 0~100A	±1%	150mV	85%
SE-1500-24	24V, 0~62.5A	±1%	150mV	87%
SE-1500-27	27V, 0~55.6A	±1%	150mV	88%
SE-1500-48	48V, 0~31.3A	±1%	150mV	89%

We provide specification, drawing, test report and more information, please visit our web site **http://www.meanwell.com**

Who can provide you better services and be a trustworthy partner in the power industry?
— "**MEAN WELL**" tries to be —

Best products also need best service.
We have authorized distributors all over the world. They have sufficient stock for your prompt delivery. Also they can offer you technical support & RMA services. Please contact your local distributors for more product information. You can also contact us at info@meanwell.com for information of your local distributors.

Enclosed-LRS Series

35~100W Low Profile

Features

- No load power consumption <0.2W for 35W/50W; <0.3W for 75W/100W
- Universal AC input / Full range
- Withstand 300VAC surge input for 5 seconds
- Ultra compact and 1U low profile
- Withstand 5G vibration test
- High operating temperature up to 70°C
- Protections: Short circuit / Overload / Over voltage
- Cooling by free air convection
- Compliance to IEC/EN60335-1(PD3) and IEC/EN61558-1,-2-16 for household appliances
- Operating altitude up to 5000 meters
- High efficiency, long life and high reliability
- LED indicator for power on
- Low cost
- 3 years warranty

General Specification (Please refer to www.meanwell.com for detail spec.)

Model No.		LRS-35	LRS-50	LRS-75	LRS-100
AC input voltage range		85~264VAC ; 120~370VDC			
AC inrush current (max.)		Cold start, 45A at 230VAC		50A at 230VAC	
DC adjustment range		±10% by potentiometer			
Overload protection	Range	110%~150%			
	Type	Hiccup mode, auto-recovery			
Over voltage protection	Range	115%~135% rated output voltage			
	Type	Shut down o/p voltage, re-power on to recover			
Withstand voltage		I/P-O/P: 3.75kVAC, I/P-FG: 2kVAC, O/P-FG: 1.25kVAC, 1 minute			
Working temperature		-30~+70°C (refer to output derating curve)			
Safety standards		UL60950-1, IEC/EN60950-1, IEC/EN61558-1, EN61558-2-16, IEC/EN60335-1, CCC GB4943 approved			
EMC standards		EN55022 class B, EN55014, EN61000-3-2, 3, EN61000-4,2,3,4,5,6,8,11, GB9254			
Connection		5P/9.5mm pitch terminal block			7P/9.5mm pitch terminal block
Dimension (LxWxH) (mm)		99x 82x 30		99x 97x 30	129x 97x 30

35W — LRS-35

Model No.	Output	Tol.	R&N	Effi.
LRS-35-5	5V, 0~7A	±2%	80mV	82.0%
LRS-35-12	12V, 0~3A	±1%	120mV	86.0%
LRS-35-15	15V, 0~2.4A	±1%	120mV	86.0%
LRS-35-24	24V, 0~1.5A	±1%	150mV	88.0%
LRS-35-36	36V, 0~1A	±1%	200mV	88.0%
LRS-35-48	48V, 0~0.8A	±1%	200mV	89.0%

75W — LRS-75

Model No.	Output	Tol.	R&N	Effi.
LRS-75-5	5V, 0~14A	±2%	100mV	86.5%
LRS-75-12	12V, 0~6A	±1%	120mV	89.0%
LRS-75-15	15V, 0~5A	±1%	120mV	89.0%
LRS-75-24	24V, 0~3.2A	±1%	150mV	90.0%
LRS-75-36	36V, 0~2.1A	±1%	200mV	91.5%
LRS-75-48	48V, 0~1.6A	±1%	200mV	91.5%

50W — LRS-50

Model No.	Output	Tol.	R&N	Effi.
LRS-50-3.3	3.3V, 0~10A	±3%	80mV	80.0%
LRS-50-5	5V, 0~10A	±2%	80mV	83.0%
LRS-50-12	12V, 0~4.2A	±1%	120mV	86.0%
LRS-50-15	15V, 0~3.4A	±1%	120mV	88.0%
LRS-50-24	24V, 0~2.2A	±1%	150mV	88.0%
LRS-50-36	36V, 0~1.45A	±1%	200mV	89.0%
LRS-50-48	48V, 0~1.1A	±1%	200mV	90.0%

100W — LRS-100

Model No.	Output	Tol.	R&N	Effi.
LRS-100-3.3	3.3V, 0~20A	±3%	100mV	84.5%
LRS-100-5	5V, 0~18A	±2%	100mV	86.0%
LRS-100-12	12V, 0~8.5A	±1%	120mV	88.0%
LRS-100-15	15V, 0~7A	±1%	120mV	88.5%
LRS-100-24	24V, 0~4.5A	±1%	150mV	90.0%
LRS-100-36	36V, 0~2.8A	±1%	200mV	90.5%
LRS-100-48	48V, 0~2.3A	±1%	200mV	91.0%

Enclosed-LRS Series

150~350W Low Profile

Features

- No load power consumption <0.5W for 150W; <0.75W for 200W/350W
- AC input selectable by switch (LRS-150F Universal AC input / Full range)
- Withstand 300VAC surge input for 5 seconds
- Ultra compact and 1U low profile
- Withstand 5G vibration test
- High operating temperature up to 70°C
- Protections: Short circuit / Overload / Over voltage / Over temp.
- Cooling by free air convection (150W/200W); forced air cooling by built-in DC fan (350W)
- Compliance to IEC/EN60335-1(PD3) and IEC/EN61558-1,-2-16 for household appliances (150W)
- Operating altitude up to 5000 meters
- LED indicator for power on
- High efficiency, long life and high reliability
- Low cost
- 3 years warranty

General Specification (Please refer to www.meanwell.com for detail spec.)

Model No.		LRS-150F	LRS-150	LRS-200	LRS-350
AC input voltage range		85~264VAC; 120~370VDC	115 / 230VAC by switch		
AC inrush current(max.)		Cold start, 60A at 230VAC			
DC adjustment range		±10% by potentiometer			
Overload protection	Range	110%~140%			
	Type	Hiccup mode, auto-recovery			
Over voltage protection	Range	115%~145% rated output voltage			
	Type	Shut down o/p voltage, re-power on to recover			
Withstand voltage		I/P-O/P: 3.75kVAC, I/P-FG: 2kVAC, O/P-FG: 1.25kVAC		I/P-O/P: 3kVAC, I/P-FG: 2kVAC, O/P-FG: 0.5kVAC	
Working temperature		-30~+70°C		-25~+70°C (refer to output derating curve)	
Safety standards		UL60950-1, IEC/EN60950-1, IEC/EN61558-1, EN61558-2-16, IEC/EN60335-1, CCC GB4943 approved		UL60950-1 approved	
EMC standards		EN55022 class B, EN55014, EN61000-3-2, 3, EN61000-4,2,3,4,5,6,8,11, GB9254		Design refer to EN55022 class A	
Connection		7P/9.5mm pitch terminal block		9P/9.5mm pitch terminal block	
Dimension (LxWxH) (mm)		159x 97x 30		215x 115x 30	

LRS-150 Series

Model No.	Output	Tol.	R&N	Effi.
LRS-150-12	12V, 0~12.5A	±1%	150mV	87.5%
LRS-150-15	15V, 0~10A	±1%	150mV	88.5%
LRS-150-24	24V, 0~6.5A	±1%	200mV	89.0%
LRS-150-36	36V, 0~4.3A	±1%	200mV	89.0%
LRS-150-48	48V, 0~3.3A	±1%	200mV	90.0%

LRS-150F Series

Model No.	Output	Tol.	R&N	Effi.
LRS-150F-5	5V, 0~22A	±2%	100mV	85.0%
LRS-150F-12	12V, 0~12.5A	±1%	150mV	87.5%
LRS-150F-15	15V, 0~10A	±1%	150mV	89.0%
LRS-150F-24	24V, 0~6.5A	±1%	200mV	89.0%
LRS-150F-36	36V, 0~4.3A	±1%	200mV	89.0%
LRS-150F-48	48V, 0~3.3A	±1%	200mV	90.0%

LRS-200 Series

Model No.	Output	Tol.	R&N	Effi.
LRS-200-3.3	3.3V, 0~40A	±3%	150mV	83.0%
LRS-200-4.2	4.2V, 0~40A	±4%	150mV	86.0%
LRS-200-5	5V, 0~40A	±3%	150mV	87.0%
LRS-200-12	12V, 0~17A	±1.5%	150mV	87.5%
LRS-200-15	15V, 0~14A	±1%	150mV	88.0%
LRS-200-24	24V, 0~8.8A	±1%	150mV	89.5%
LRS-200-36	36V, 0~5.9A	±1%	200mV	89.5%
LRS-200-48	48V, 0~4.4A	±1%	200mV	90.0%

LRS-350 Series

Model No.	Output	Tol.	R&N	Effi.
LRS-350-3.3	3.3V, 0~60A	±4%	150mV	79.5%
LRS-350-4.2	4.2V, 0~60A	±4%	150mV	81.5%
LRS-350-5	5V, 0~60A	±3%	150mV	83.5%
LRS-350-12	12V, 0~29A	±1.5%	150mV	85.0%
LRS-350-15	15V, 0~23.2A	±1%	150mV	86.0%
LRS-350-24	24V, 0~14.6A	±1%	150mV	88.0%
LRS-350-36	36V, 0~9.7A	±1%	200mV	88.5%
LRS-350-48	48V, 0~7.3A	±1%	200mV	89.0%

Enclosed-PFC

75~240W Single Output

Features

- Universal AC input / Full range
- Built-in active PFC function
- Protections: Short circuit / Overload / Over voltage / Over temperature (SP-150 / 200 / 240)
- Cooling by free air convection (SP-75 / 100 / 150)
- Forced air cooling by built-in DC fan (SP-200 / 240)
- Optional remote ON/OFF control (SP-75~200)
- Built-in fan speed control (SP-200)
- Built-in fan ON/OFF control (SP-240)
- 100% full load burn-in test
- 3 years warranty

(SP-200 only)

General Specification (Please refer to www.meanwell.com for detail spec.)

Model No.		SP-75	SP-100	SP-150	SP-200	SP-240
AC input voltage range		85~264VAC; 120~370VDC				88~264VAC; 124~370VDC
AC inrush current (max.)		Cold start, 45A at 230VAC	Cold start, 35A at 230VAC	Cold start, 45A at 230VAC	Cold start, 50A at 230VAC	Cold start, 40A at 230VAC
DC adjustment range		-5%~+10% rated output voltage				±15% rated output voltage
Overload protection	Range	105%~150%				105%~135%
	Type	Constant current limiting, auto-recovery				Hiccup mode, auto-recovery
Over voltage protection	Range	115%~135%	110%~135%			120%~150%
	Type	Shut off, AC recycle to re-start				
Withstand voltage		I/P-O/P: 3kVAC, I/P-FG: 1.5kVAC, O/P-FG: 0.5kVAC, 1 minute				
Working temperature		-10~+60°C		-10~+55°C	-10~+60°C	-20~+70°C
Safety standards		UL60950-1, TUV EN60950-1, GB4943(SP-200 only) approved				
EMC standards		EN55022 class B, EN61000-4-2,3,4,5,6,8,11, EN61000-3-2,3, GB9254(SP-200 only)				
Connection		5P / 9.5mm pitch	7P / 9.5mm pitch terminal block with cover			
Dimension (LxWxH)(mm)		179x 97x 33	179x 99x 45	199x 99x 50	199x 99x 50	190x 93x 50
Case No.		920A	915A	916A	916B	987A
Packing		20pcs/12.0kg	20pcs/14.3kg	20pcs/16.4kg	20pcs/17.9kg	18pcs/15.4kg

75W — SP-75

Model No.	Output	Tol.	R&N	Effi.
SP-75-3.3	3.3V, 0~15A	±2%	80mV	70.0%
SP-75-5	5V, 0~15A	±2%	80mV	76.0%
SP-75-7.5	7.5V, 0~10A	±2%	80mV	79.0%
SP-75-12	12V, 0~6.3A	±2%	80mV	81.0%
SP-75-13.5	13.5V, 0~5.6A	±2%	80mV	82.0%
SP-75-15	15V, 0~5.0A	±2%	80mV	82.0%
SP-75-24	24V, 0~3.2A	±1%	100mV	83.0%
SP-75-27	27V, 0~2.8A	±1%	100mV	83.0%
SP-75-48	48V, 0~1.6A	±1%	100mV	83.0%

100W — SP-100

Model No.	Output	Tol.	R&N	Effi.
SP-100-3.3	3.3V, 0~20.0A	±2%	100mV	75.0%
SP-100-5	5V, 0~20.0A	±2%	100mV	79.0%
SP-100-7.5	7.5V, 0~13.5A	±2%	100mV	82.0%
SP-100-12	12V, 0~8.50A	±2%	100mV	82.5%
SP-100-13.5	13.5V, 0~7.50A	±2%	100mV	83.0%
SP-100-15	15V, 0~6.70A	±2%	100mV	84.0%
SP-100-24	24V, 0~4.20A	±1%	150mV	87.0%
SP-100-27	27V, 0~3.80A	±1%	150mV	86.0%
SP-100-48	48V, 0~2.10A	±1%	250mV	84.0%

48hrs delivery—
We keep enough stock for 95% of standard models at our 2400m² warehouse. We can arrange prompt delivery within 48hrs.

150W — SP-150

Model No.	Output	Tol.	R&N	Effi.
SP-150-3.3	3.3V, 0~30.0A	±2%	100mV	73.0%
SP-150-5	5V, 0~30.0A	±2%	100mV	77.5%
SP-150-7.5	7.5V, 0~20.0A	±2%	100mV	81.0%
SP-150-12	12V, 0~12.5A	±2%	100mV	84.0%
SP-150-13.5	13.5V, 0~11.2A	±2%	100mV	84.0%
SP-150-15	15V, 0~10.0A	±2%	100mV	85.0%
SP-150-24	24V, 0~6.30A	±1%	150mV	85.0%
SP-150-27	27V, 0~5.60A	±1%	150mV	85.0%
SP-150-48	48V, 0~3.20A	±1%	250mV	85.0%

200W — SP-200

Model No.	Output	Tol.	R&N	Effi.
SP-200-3.3	3.3V, 0~40.0A	±2%	100mV	69.0%
SP-200-5	5V, 0~40.0A	±2%	100mV	76.0%
SP-200-7.5	7.5V, 0~26.7A	±2%	100mV	78.5%
SP-200-12	12V, 0~16.7A	±2%	100mV	84.0%
SP-200-13.5	13.5V, 0~14.9A	±2%	100mV	84.0%
SP-200-15	15V, 0~13.4A	±2%	100mV	84.0%
SP-200-24	24V, 0~8.40A	±1%	150mV	85.0%
SP-200-27	27V, 0~7.50A	±1%	150mV	85.0%
SP-200-48	48V, 0~4.20A	±1%	250mV	85.0%

240W — SP-240

Model No.	Output	Tol.	R&N	Effi.
SP-240-5	5V, 0~45A	±2%	150mV	79.0%
SP-240-7.5	7.5V, 0~32A	±2%	150mV	83.0%
SP-240-12	12V, 0~20A	±1%	150mV	86.0%
SP-240-15	15V, 0~16A	±1%	150mV	86.0%
SP-240-24	24V, 0~10A	±1%	150mV	87.0%
SP-240-30	30V, 0~8.0A	±1%	150mV	88.0%
SP-240-48	48V, 0~5.0A	±1%	150mV	89.0%

Enclosed-PFC

320~750W Single Output

Features

- Universal AC input / Full range
- Built-in active PFC function
- Protections: Short circuit / Overload / Over voltage / Over temperature
- Forced air cooling by built-in DC fan
- Built-in fan speed control (SP-320)
- Built-in remote sense function and ON/OFF control (SP-480/750 & PSP-600)
- Current sharing up to 2400W (3+1) (PSP-600)
- With DC OK signal output (PSP-600)
- With PG/PF signal output (SP-750)
- 100% full load burn-in test
- 3 years warranty

General Specification (Please refer to www.meanwell.com for detail spec.)

Model No.		SP-320	SP-480	PSP-600	SP-750
AC input voltage range		88~264VAC	85~264VAC	88~264VAC	90~264VAC
AC inrush current (max.)		Cold start, 40A at 230VAC			Cold Start, 45A at 230VAC
DC adjustment range		±10% rated output voltage			
Overload protection	Range	105%~135%	105%~145%	105%~135%	105%~125%
	Type	Hiccup mode, auto-recovery	Constant current limiting, auto-recovery	Constant current limiting, auto-recovery	Constant current limiting, hiccup after 3sec.
Over voltage protection		115%~145%	115%~140%		
Withstand voltage		I/P - O/P: 3kVAC, I/P - FG: 1.5kVAC, O/P - FG: 0.5kVAC(short for SP-480), 1 minute			
Working temperature		-20~+65°C	-20~+60°C		
Safety standards		UL60950-1, TUV EN60950-1 approved; GB4943 approved also for SP-320 (expect for 3.3V/ 5PNC/ 36V)			
EMC standards		EN55022 class B, EN61000-4-2,3,4,5,6,8,11, EN61000-3-2,3, EN61000-6-2(SP-480/750), GB9254 (SP-320 only)			
Connection		9P / 9.5mm pitch terminal block with cover	9P / 11mm pitch terminal block with cover	7+8P / 9.5mm pitch terminal block with cover	5P / 10mm pitch terminal block with cover for input; copper pillars for output
Dimension (LxWxH)(mm)		215x115x50	278x127x43	170x120x93	278x127x63.5
Case No.		912G	929A	910A	919A
Packing		12pcs / 14.0kg	6pcs / 11.3kg	8pcs / 15.5kg	6pcs / 18.4kg

SP-320 Series

Model No.	Output	Tol.	R&N	Effi.
*SP-320-3.3	3.3V, 0~60.0A	±1%	150mV	74%
SP-320-5	5V, 0~55.0A	±2%	150mV	79%
*SP-320-5PNC	5V, 0~55.0A	±2%	150mV	80%
SP-320-7.5	7.5V, 0~40.0A	±2%	150mV	83%
SP-320-12	12V, 0~25.0A	±1%	150mV	86%
SP-320-13.5	13.5V, 0~22.0A	±1%	150mV	86%
SP-320-15	15V, 0~20.0A	±1%	150mV	86%
SP-320-24	24V, 0~13.0A	±1%	150mV	87%
SP-320-27	27V, 0~11.7A	±1%	200mV	88%
*SP-320-36	36V, 0~8.80A	±1%	220mV	87%
SP-320-48	48V, 0~6.70A	±1%	240mV	89%

* Without models

❖ SP-320-5PNC with conformal coating and high ambient temperature operation ability is suitable for LED moving sign applications, MOQ required.

SP-480 Series

Model No.	Output	Tol.	R&N	Effi.
SP-480-3.3	3.3V, 0~85A	±2.0%	80mV	73%
SP-480-5	5V, 0~85A	±2.0%	80mV	79%
SP-480-12	12V, 0~43A	±1.5%	120mV	85%
SP-480-15	15V, 0~35A	±1.5%	150mV	85%
SP-480-24	24V, 0~22A	±1.0%	150mV	87%
SP-480-48	48V, 0~11A	±1.0%	240mV	89%

PSP-600 Series

Model No.	Output	Tol.	R&N	Effi.
PSP-600-5	5V, 0~80A	±2%	180mV	79%
PSP-600-12	12V, 0~50A	±1%	240mV	84%
PSP-600-13.5	13.5V, 0~44.5A	±1%	240mV	85%
PSP-600-15	15V, 0~40A	±1%	240mV	85%
PSP-600-24	24V, 0~25A	±1%	240mV	86%
PSP-600-27	27V, 0~22.2A	±1%	240mV	86%
PSP-600-48	48V, 0~12.5A	±1%	300mV	87%

SP-750 Series

Model No.	Output	Tol.	R&N	Effi.
SP-750-5	5V, 0~120A	±2%	120mV	80%
SP-750-12	12V, 0~62.5A	±1%	120mV	85%
SP-750-15	15V, 0~50.0A	±1%	120mV	87%
SP-750-24	24V, 0~31.3A	±1%	120mV	89%
SP-750-27	27V, 0~27.8A	±1%	120mV	89%
SP-750-48	48V, 0~15.7A	±1%	120mV	90%

Q.A.
Who can provide you better services and be a trustworthy partner in the power industry?
— "MEAN WELL" tries to be —

Enclosed-PFC

75~200W Low Profile

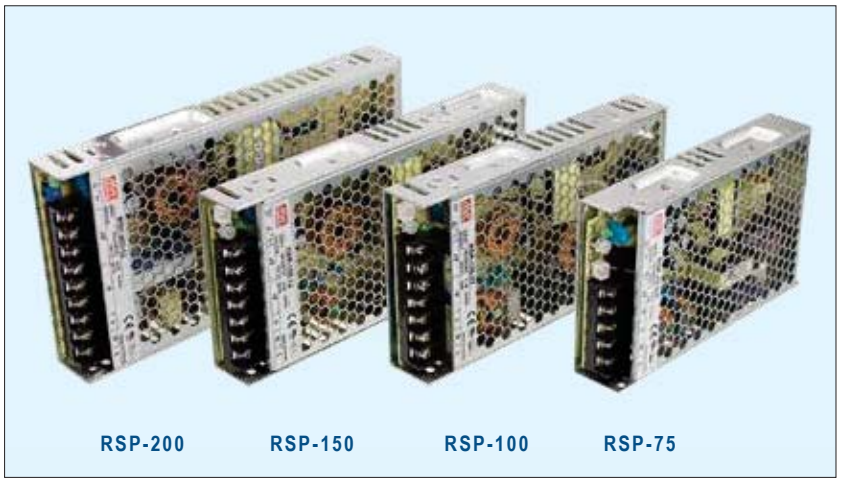

Features

- Ultra low profile: 30mm
- Universal AC input / Full range
- Built-in active PFC function
- Protections: Short circuit / Overload / Over voltage / Over temperature (RSP-100/150/200)
- Cooling by free air convection
- Built-in constant current limiting circuit (RSP-75/100/150)
- Remote ON/OFF control (RSP-75/100/150)
- LED indicator for power on
- 3 years warranty

General Specification (Please refer to www.meanwell.com for detail spec.)

Model No.		RSP-75	RSP-100	RSP-150	RSP-200
AC input voltage range		85~264VAC; 120~370VDC			88~264VAC; 124~370VDC
AC inrush current (max.)		Cold start, 35A at 230VAC	30A at 230VAC	45A at 230VAC	40A at 230VAC
DC adjustment range		-5%~+10% rated output voltage			±10% rated output voltage
Overload protection	Range	105%~135%	105%~150%		
	Type	Constant current limiting, auto-recovery			Hiccup mode, auto-recovery
Over voltage protection	Range	110%~135%			115%~145%
	Type	Shut down O/P voltage, re-power on to recover			
Withstand voltage		I/P-O/P: 3.75kVAC, I/P-FG: 2kVAC, O/P-FG: 0.5kVAC			I/P-O/P: 3kVAC, I/P-FG: 2kVAC, O/P-FG: 0.5kVAC
Working temperature		-25~+70°C	-30~+70°C (refer to output derating curve)		
Safety standards		UL60950-1, TUV EN60950-1, EN61558-1, EN61558-2-16, CCC GB4943 approved; UL62368-1 approved for RSP-150 only			UL60950-1, TUV EN60950-1, CCC GB4943 approved
EMC standards		EN55022 class B, EN61000-3-2,3, EN61000-4-2,3,4,5,6,8,11, GB9254			
Connection		5P / 9.5mm pitch terminal block	7P / 9.5mm pitch terminal block		9P / 9.5mm pitch terminal block
Dimension (LxWxH) (mm)		159x97x30	179x99x30	199x99x30	215x115x30

75W — RSP-75

Model No.	Output	Tol.	R&N	Effi.
RSP-75-3.3	3.3V, 0~15A	±2%	80mV	76.0%
RSP-75-5	5V, 0~15A	±2%	80mV	82.0%
RSP-75-7.5	7.5V, 0~10A	±2%	80mV	84.0%
RSP-75-12	12V, 0~6.3A	±2%	120mV	85.0%
RSP-75-13.5	13.5V, 0~5.6A	±2%	120mV	85.0%
RSP-75-15	15V, 0~5A	±2%	120mV	86.0%
RSP-75-24	24V, 0~3.2A	±1%	120mV	87.0%
RSP-75-27	27V, 0~2.8A	±1%	120mV	88.0%
RSP-75-48	48V, 0~1.6A	±1%	200mV	89.0%

150W — RSP-150

Model No.	Output	Tol.	R&N	Effi.
RSP-150-3.3	3.3V, 0~30A	±2%	100mV	81.5%
RSP-150-5	5V, 0~30A	±2%	100mV	87.0%
RSP-150-7.5	7.5V, 0~20A	±2%	100mV	88.5%
RSP-150-12	12V, 0~12.5A	±2%	100mV	90.0%
RSP-150-13.5	13.5V, 0~11.2A	±2%	100mV	87.5%
RSP-150-15	15V, 0~10A	±2%	100mV	88.5%
RSP-150-24	24V, 0~6.3A	±1%	150mV	89.0%
RSP-150-27	27V, 0~5.6A	±1%	150mV	89.5%
RSP-150-48	48V, 0~3.2A	±1%	250mV	90.0%

100W — RSP-100

Model No.	Output	Tol.	R&N	Effi.
RSP-100-3.3	3.3V, 0~20A	±2%	100mV	83.0%
RSP-100-5	5V, 0~20A	±2%	100mV	86.0%
RSP-100-7.5	7.5V, 0~13.5A	±2%	100mV	87.0%
RSP-100-12	12V, 0~8.5A	±1%	100mV	86.0%
RSP-100-13.5	13.5V, 0~7.5A	±1%	100mV	86.5%
RSP-100-15	15V, 0~6.7A	±1%	100mV	87.0%
RSP-100-24	24V, 0~4.2A	±1%	150mV	87.0%
RSP-100-27	27V, 0~3.8A	±1%	150mV	87.0%
RSP-100-48	48V, 0~2.1A	±1%	250mV	88.0%

200W — RSP-200

Model No.	Output	Tol.	R&N	Effi.
RSP-200-2.5	2.5V, 0~40A	±2%	100mV	79.5%
RSP-200-3.3	3.3V, 0~40A	±2%	100mV	81.5%
RSP-200-4	4V, 0~40A	±2%	100mV	84.0%
RSP-200-5	5V, 0~40A	±2%	150mV	85.5%
RSP-200-7.5	7.5V, 0~26.7A	±2%	150mV	89.0%
RSP-200-12	12V, 0~16.7A	±1%	150mV	89.0%
RSP-200-13.5	13.5V, 0~14.9A	±1%	150mV	89.0%
RSP-200-15	15V, 0~13.4A	±1%	150mV	89.5%
RSP-200-24	24V, 0~8.4A	±1%	150mV	89.5%
RSP-200-27	27V, 0~7.5A	±1%	200mV	89.0%
RSP-200-36	36V, 0~5.56A	±1%	220mV	90.0%
RSP-200-48	48V, 0~4.2A	±1%	240mV	90.0%

Enclosed-PFC

320~750W Low Profile

Features

- 1U low profile
- Universal AC input / Full range
- Built-in active PFC function
- Protections: Short circuit / Overload / Over voltage / Over temp. / Fan alarm (RSP-750)
- Forced air cooling by built-in DC fan
- Vo can be trimmed by external control signal (RSP-750)
- Io can be trimmed by external control signal (RSP-750)
- Built-in remote sense and ON/OFF control (RSP-500/750)
- Built-in auxiliary power (RSP-750)
- DC OK signal (RSP-750)
- LED indicator for power on
- 3 years warranty

(RSP-320 only)

General Specification (Please refer to www.meanwell.com for detail spec.)

Model No.		RSP-320	RSP-500	RSP-750
AC input voltage range		88~264VAC; 124~370VDC	85~264VAC; 120~370VDC	90~264VAC; 127~370VDC
AC inrush current(max.)		Cold start, 40A at 230VAC		
DC adjustment range		Vo: ±10% by potentiometer		Vo: ±10% by potentiometer, or to 40%~110% of rated output voltage by 2~5.5VDC external control signal Io : to 40%~110% of rated output current by 2~5.5VDC external control signal
Overload protection	Range	105%~135%	105%~130%	105%~125%
	Type	Hiccup mode, auto-recovery	Constant current limiting, auto-recovery	
Over voltage protection	Range	115%~145%		
	Type	Shut down O/P voltage, re-power on to recover		
Withstand voltage		I/P-O/P: 3kVAC, I/P-FG: 2kVAC, O/P-FG: 0.5kVAC		
Working temperature		-30~+70°C (refer to output derating curve)		
Safety standards		UL60950-1, TUV EN60950-1 approved; CCC GB4943 approved for RSP-320 only		
EMC standards		EN55022 class B, EN61000-3-2,3, EN61000-4-2,3,4,5,6,8,11, EN61000-6-2(RSP-500/750), GB9254(RSP-320 only)		
Connection	Input	9P / 9.5mm pitch terminal block	3P / 9.5mm pitch terminal block	3P / 10mm pitch terminal block with cover
	Output		6P / 11mm pitch terminal block	Copper pillars
Dimension (LxWxH) (mm)		215x115x30	230x127x40.5	250x127x41
Case No.		207A	226A	212A

320W — RSP-320

Model No.	Output	Tol.	R&N	Effi.
RSP-320-2.5	2.5V, 0~60A	±2%	100mV	75.5%
RSP-320-3.3	3.3V, 0~60A	±2%	100mV	79.5%
RSP-320-4	4V, 0~60A	±2%	100mV	81.0%
RSP-320-5	5V, 0~60A	±2%	150mV	83.0%
*RSP-320-5CC	5V, 0~60A	±2%	150mV	83.0%
RSP-320-7.5	7.5V, 0~40A	±2%	150mV	88.0%
RSP-320-12	12V, 0~26.7A	±1%	150mV	88.0%
RSP-320-13.5	13.5V, 0~23.8A	±1%	150mV	88.0%
RSP-320-15	15V, 0~21.4A	±1%	150mV	88.5%
RSP-320-24	24V, 0~13.4A	±1%	150mV	89.0%
RSP-320-27	27V, 0~11.9A	±1%	200mV	89.0%
RSP-320-36	36V, 0~8.9A	±1%	220mV	89.5%
RSP-320-48	48V, 0~6.7A	±1%	240mV	90.0%

* RSP-320-5CC with conformal coating is suitable for LED moving sign applications, MOQ required.

500W — RSP-500

Model No.	Output	Tol.	R&N	Effi.
RSP-500-3.3	3.3V, 0~90A	±2%	120mV	81.0%
RSP-500-4	4V, 0~90A	±2%	120mV	83.0%
RSP-500-5	5V, 0~90A	±2%	150mV	84.0%
RSP-500-12	12V, 0~41.7A	±1%	150mV	88.0%
RSP-500-15	15V, 0~33.4A	±1%	150mV	88.0%
RSP-500-24	24V, 0~21A	±1%	150mV	89.0%
RSP-500-27	27V, 0~18.6A	±1%	150mV	89.5%
RSP-500-48	48V, 0~10.5A	±1%	150mV	90.5%

750W — RSP-750

Model No.	Output	Tol.	R&N	Effi.
RSP-750-5	5V, 0~100A	±2%	150mV	82.0%
RSP-750-12	12V, 0~62.5A	±1%	150mV	87.0%
RSP-750-15	15V, 0~50A	±1%	150mV	89.0%
RSP-750-24	24V, 0~31.3A	±1%	150mV	90.5%
RSP-750-27	27V, 0~27.8A	±1%	150mV	90.5%
RSP-750-48	48V, 0~15.7A	±1%	150mV	92.0%

Enclosed-PFC

1000~1600W High Power

Features

- 1U low profile (RSP-1000/1600)
- Universal AC input / Full range
- Built-in active PFC function
- Protections:
  Short circuit / Overload / Over voltage / Over temp.
- Forced air cooling by built-in DC fan
- High power density up to 25W/in³ (RSP-1600)
- Vo can be trimmed by external resistor (RSP-1000/1500) or external control signal (RSP-1000/1600)
- Io can be trimmed by external control signal (RSP-1600)
- Built-in current sharing up to 4 units (RSP-1000/1500) or 5 units (RSP-1600)
- Built-in remote sense and ON/OFF control
- Built-in auxiliary power
- DC OK signal (RSP-1000/1600)
- Alarm signal output (RSP-1500/1600)
- 5 years warranty

General Specification (Please refer to www.meanwell.com for detail spec.)

Model No.		RSP-1000	RSP-1500	RSP-1600
AC input voltage range		90~264VAC; 127~370VDC		
AC inrush current (max.)		Cold start, 40A at 230VAC	Cold start, 60A at 230VAC	Cold start, 35A at 230VAC
DC adjustment range		Vo: ±10% by potentiometer, or to 40%~110% of rated output voltage by external resistor or by 2~5.5VDC external control signal	Vo: -30%~+10% by potentiometer, or to 70%~100% of rated output voltage by external resistor	Vo: -1%~+22.5% by potentiometer, or to 40%~125% of rated output voltage by 1~5VDC external control signal Io: to 20%~100% of rated output current by 1~5VDC external control signal
Overload protection	Range	105%~125%	105%~135%	105%~115%
	Type	Constant current limiting, auto-recovery	Constant current limiting, shut off after 5 sec., re-power on to recover	Constant current limiting and shut down o/p voltage 5 sec. after o/p voltage is down low, re-power on to recover
Over voltage protection	Range	115%~135%	115%~140%	130%~155%
	Type	Shut down O/P voltage, re-power on to recover		
Withstand voltage		I/P-O/P: 3kVAC, I/P-FG: 2kVAC, O/P-FG: 0.5kVAC		I/P-O/P: 3kVAC, I/P-FG: 2kVAC, O/P-FG: 1.5kVAC
Working temperature		-20~+60°C	-20~+70°C	-30~+70°C
Safety standards		UL60950-1, TUV EN60950-1 approved (RSP-1600 pending)		
EMC standards		EN55022 class B; EN61000-3-2,3; EN61000-4-2,3,4,5,6,8,11; EN61000-6-2 for RSP-1000 (RSP-1600 pending)		
Connection	Input	3P/10mm pitch terminal block with cover	3P/13mm pitch terminal block with cover	3P/10mm pitch terminal block with cover
	Output	M5x12 screw terminal	Bus bars	
Dimension (LxWxH) (mm)		295x 127x 41	278x 127x 83.5	300x 85x 41
Case No.		952B	943A	237B
Packing		1.95kg; 6pcs / 12.7kg / 1.15CUFT	3.0kg; 4pcs / 13kg / 1.19CUFT	1.8kg; 6pcs / 12.5kg / 1.06CUFT

1000W — RSP-1000

Model No.	Output	Tol.	R&N	Effi.
RSP-1000-12	12V, 0~60A	±1%	150mV	83%
RSP-1000-15	15V, 0~50A	±1%	150mV	85%
RSP-1000-24	24V, 0~40A	±1%	150mV	88%
RSP-1000-27	27V, 0~37A	±1%	150mV	88%
RSP-1000-48	48V, 0~21A	±1%	150mV	90%

1500W — RSP-1500

Model No.	Output	Tol.	R&N	Effi.
RSP-1500-5	5V, 0~240A	±2%	150mV	80%
RSP-1500-12	12V, 0~125A	±1%	150mV	87%
RSP-1500-15	15V, 0~100A	±1%	150mV	87%
RSP-1500-24	24V, 0~63A	±1%	150mV	90%
RSP-1500-27	27V, 0~56A	±1%	150mV	90%
RSP-1500-48	48V, 0~32A	±1%	200mV	91%

1600W — Under Development — RSP-1600

Model No.	Output	Tol.	R&N	Effi.
RSP-1600-12	12V, 0~125A	±1%	150mV	87.0%
RSP-1600-24	24V, 0~67A	±1%	200mV	90.5%
RSP-1600-27	27V, 0~59A	±1%	200mV	90.5%
RSP-1600-36	36V, 0~44.5A	±1%	250mV	91.0%
RSP-1600-48	48V, 0~33.5A	±1%	300mV	93.0%

Enclosed-PFC

2000~3000W High Power

Features

- 1U low profile (RSP-2000)
- Universal AC input / Full range (RSP-2000)
  AC input 180~264VAC only (RSP-2400/3000)
- Built-in active PFC function
- Protections:
  Short circuit / Overload / Over voltage /
  Over temperature / Fan alarm (RSP-2400/3000)
- Forced air cooling by built-in DC fan
- High power density up to 21.4W/in³ (RSP-2000)
- Vo can be trimmed by external control signal
- Built-in current sharing up to 4 units
  (RSP-2000) or 3 units (RSP-2400/3000)
- Built-in remote sense and ON/OFF control
- Built-in auxiliary power
- DC OK signal (RSP-2000)
- Alarm signal output
- 5 years warranty

General Specification (Please refer to www.meanwell.com for detail spec.)

Model No.		RSP-2000	RSP-2400	RSP-3000
AC input voltage range		90~264VAC; 127~370VDC	180~264VAC; 254~370VDC	
AC inrush current (max.)		Cold start, 50A at 230VAC	Cold start, 60A at 230VAC	
DC adjustment range		Vo: ±10% by potentiometer, or to 40%~115% of rated output voltage by 1~4.7VDC external control signal	Vo: ±10% by potentiometer, or to 20%~110% of rated output voltage by 1~5.5VDC external control signal	
Overload protection	Range	105%~125%	100%~112%	
	Type	Constant current limiting, shut off after 5 sec., re-power on to recover	Constant current limiting, shut off after 5 sec., re-power on to recover (can adjust to continuous constant current limiting)	
Over voltage protection	Range	120%~145%	115%~140%	
	Type	Shut down O/P voltage, re-power on to recover		
Withstand voltage		I/P-O/P: 3kVAC, I/P-FG: 2kVAC, O/P-FG: 0.5kVAC		
Working temperature		-35~+70°C	-20~+70°C	
Safety standards		UL60950-1, TUV EN60950-1 approved		
EMC standards		EN55022 class B; EN61000-3-2,3; EN61000-4-2,3,4,5,6,8,11; EN61000-6-2(RSP-2000)		
Connection	Input	3P/10mm pitch terminal block with cover	3P/13mm pitch terminal block with cover	
	Output	M5x12 screw terminal	Bus bars	
Dimension (LxWxH) (mm)		295x 127x 41	278x 177.8x 63.5	
Case No.		952D	982B	
Packing		1.95kg; 6pcs / 12.7kg / 1.15CUFT	3.3kg; 4pcs / 14.2kg / 1.89CUFT	4kg; 4pcs / 16kg / 1.89CUFT

2000W RSP-2000

Model No.	Output	Tol.	R&N	Effi.
RSP-2000-12	12V, 0~100A	±2%	150mV	87.0%
RSP-2000-24	24V, 0~80A	±1%	200mV	90.5%
RSP-2000-48	48V, 0~42A	±1%	300mV	92.0%

3000W RSP-3000

Model No.	Output	Tol.	R&N	Effi.
RSP-3000-12	12V, 0~200A	±1%	150mV	87.5%
RSP-3000-24	24V, 0~125A	±1%	150mV	90.0%
RSP-3000-48	48V, 0~62.5A	±1%	200mV	91.5%

2400W RSP-2400

Model No.	Output	Tol.	R&N	Effi.
RSP-2400-12	12V, 0~166.7A	±1%	150mV	88.0%
RSP-2400-24	24V, 0~100A	±1%	150mV	90.5%
RSP-2400-48	48V, 0~50A	±1%	200mV	91.5%

Customer Satisfaction —
Today's effort, tomorrow's reward. Continuously improve CQTS to satisfy customer is our goal.

To satisfy our customers is our goal —
- High Quality
- Low Cost
- Prompt Delivery
- Best Service

Enclosed-PFC

5000~10000W High Power

RST-5000

NEW

RST-10000

Features

- 3ϕ 3-wire/△ 196~305VAC or 3ϕ 4-wire/ Y 340~530VAC wide input range
- Built-in active PFC function
- High efficiency up to 91%
- Protections:
  Short circuit / Overload / Over voltage / Over temperature/ Fan alarm
- Forced air cooling by built-in DC fan
- Vo can be trimmed by external control signal
- Io can be trimmed by external control signal
- Built-in current sharing up to 20kW
  (4 units of RST-5000 or 2 units of RST-10000)
- Built-in remote sense and ON/OFF control
- Built-in 12V/0.1A auxiliary power
- Alarm signal output
- 5 years warranty

General Specification (Please refer to www.meanwell.com for detail spec.)

Model No.		RST-5000	RST-10000
AC input voltage range		3ϕ 3-wire/△ 196~305VAC or 3ϕ 4-wire/ Y 340~530VAC	
AC inrush current (max.)		Cold start, 75A at 230VAC (3ϕ 3-wire/△) or 50A at 400VAC (3ϕ 4-wire/ Y)	Cold start, 150A at 230VAC (3ϕ 3-wire/△) or 100A at 400VAC (3ϕ 4-wire/ Y)
DC adjustment range		Vo: -2%~+20% by potentiometer or to 20%~120% of rated output voltage by 1~6VDC external control signal Io: to 20%~100% of rated output current by 1~5VDC external control signal	
Overload protection	Range	100%~112%	
	Type	User adjustable continuous constant current limiting or constant current limiting with delay shutdown after 5 seconds. Re-power on to recover.	
Over voltage protection	Range	125%~140%	
	Type	Shut down O/P voltage, re-power on to recover	
Withstand voltage		I/P-O/P: 3kVAC, I/P-FG: 2kVAC, O/P-FG: 0.5kVAC	
Working temperature		-30~+70°C (refer to output derating curve)	
Safety standards		UL60950-1, TUV EN60950-1 approved	
EMC standards		EN55022 class A, EN61000-3-2,3, EN61000-4-2,3,4,5,6,8,11, EN61000-6-2	
Connection	Input	6P/13mm pitch terminal block with cover	
	Output	Bus bars	
Dimension (LxWxH) (mm)		460x 211x 83.5	540x 424x 83.5
Case No.		223A	234A
Packing		10kg; 1pcs / 10.1kg / 1.15CUFT	23.5kg; 1pcs / 23.5kg / 2.45CUFT

5000W RST-5000

Model No.	Output	Tol.	R&N	Effi.
RST-5000-24	24V, 0~200A	±1%	150mV	89%
RST-5000-36	36V, 0~138A	±1%	200mV	90%
RST-5000-48	48V, 0~105A	±1%	200mV	91%

10000W NEW RST-10000

Model No.	Output	Tol.	R&N	Effi.
RST-10000-24	24V, 0~400A	±1%	150mV	89%
RST-10000-36	36V, 0~276A	±1%	200mV	90%
RST-10000-48	48V, 0~210A	±1%	200mV	91%

To satisfy customers is our goal —
- High Quality
- Low Cost
- Prompt Delivery
- Best Service

MEAN WELL Catalog —
Your reference book for power supply.

Enclosed-PFC

150~1500W Output Voltage Programmable

Features

- Universal AC input / Full range
- Built-in active PFC function
- Protections:
  Short circuit / Overload / Over voltage / Over temperature
- Vo can be trimmed by external control signal
- Forced air cooling by built-in DC fan (except for SPV-150)
- Built-in remote sense and ON/OFF control (SPV-1500)
- Built-in 12V/0.1A auxiliary power and current sharing up to 4500W (SPV-1500)
- 3 years warranty

General Specification (Please refer to www.meanwell.com for detail spec.)

Parallel (SPV-1500)

Model No.		SPV-150	SPV-300	SPV-1500
AC input voltage range		88~264VAC; 124~370VDC		90~264VAC; 127~370VDC
AC inrush current (max.)		Cold start, 40A at 230VAC		Cold start, 60A at 230VAC
DC adjustment range		Vo: -15%~+10% by potentiometer or to 20%~110% of rated output voltage by 1~5.5VDC external control signal		Vo: ±5% by potentiometer or to 20%~110% of rated output voltage by 1~5.5VDC external control signal
Overload protection	Range	105%~150%	105%~135%	
	Type	constant current limiting, auto-recovery		
Over voltage protection	Range	115%~140%		120%~140%
	Type	shut down O/P voltage, re-power on to recover		
Withstand voltage		I/P - O/P: 3kVAC, I/P-FG: 2kVAC, O/P-FG: 0.5kVAC		
Working temperature		-20~+65°C		-20~+70°C
Safety standards		UL60950-1, TUV EN60950-1 approved		
EMC standards		EN55022 class B, EN61000-3-2,3, EN61000-4-2,3,4,5,6,8,11		
Dimension (LxWxH) (mm)		215x 115x 50		278x 127x 83.5
Case No.		912L	912G	943A
Packing		1.1kg ; 12pcs / 14kg / 0.92CUFT		3.0kg ; 4pcs / 13kg / 1.19CUFT

150W — SPV-150

Model No.	Output	Tol.	R&N	Effi.
SPV-150-12	12V, 0~12.5A	±1%	150mV	82%
SPV-150-24	24V, 0~6.25A	±1%	150mV	83%
SPV-150-48	48V, 0~3.125A	±1%	240mV	83%

1500W — SPV-1500

Model No.	Output	Tol.	R&N	Effi.
SPV-1500-12	12V, 0~125A	±1%	150mV	86.5%
SPV-1500-24	24V, 0~63A	±1%	150mV	90.0%
SPV-1500-48	48V, 0~32A	±1%	200mV	90.0%

300W — SPV-300

Model No.	Output	Tol.	R&N	Effi.
SPV-300-12	12V, 0~25A	±1%	150mV	83.5%
SPV-300-24	24V, 0~12.5A	±1%	150mV	85.0%
SPV-300-48	48V, 0~6.25A	±1%	240mV	86.5%

Output Voltage Programmable for SPV series

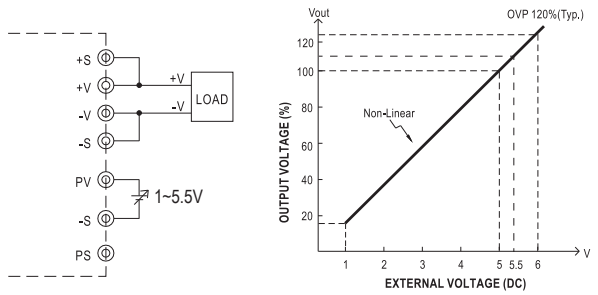

Enclosed-PFC

75~320W 3~4 Output

Features

- Universal AC input / Full range
- Protections: Short circuit / Overload / Over voltage / Over temperature
- Over temperature protection (200~320W built-in, option for 100W and 150W)
- Built-in active PFC function
- Cooling by free air convection (75W / 100W)
- Forced air cooling by built-in DC fan (150W / 200W / 320W)
- 100% full load burn-in test
- 3 years warranty

(except for QP-320)

General Specification (Please refer to www.meanwell.com for detail spec.)

Model No.		TP-75	TP-100 QP-100	TP-150 QP-150	QP-200	QP-320
AC input voltage range		90~264VAC; 127~370VDC				
AC inrush current (max.)		Cold start, 20A at 230VAC	Cold start, 40A at 230VAC		Cold start, 50A at 230VAC	Cold start, 45A at 230VAC
DC adjustment range		CH1: -5%~+10% rated output voltage	CH1: -5%~+10% rated output voltage (CH1&2 for QP-100/150-3x, QP-100/150-D/F)		CH1&2: -5%~+10% rated output voltage	
Overload protection	Range	105%~150%				
	Type	Hiccup mode, auto-recovery			Constant current limiting, auto-recovery	Fold back current limiting, auto-recovery
Over voltage protection		CH1: 115%~135%	115%~135% for CH1 or CH1&2			
Withstand voltage		I/P - O/P: 3kVAC, I/P - FG: 2kVAC, O/P - FG:0.5kVAC, 1 minute				
Working temperature		-10~+60°C (refer to output derating curve)				-10~+70°C
Setup, rise, hold up time		800ms, 60ms, 36ms at full load and 230VAC	800ms, 60ms, 24ms at full load and 230VAC(TP-100/150); 800ms, 50ms, 24ms at full load and 230VAC (QP-100/150)		800ms, 50ms, 24ms at full load and 230VAC	800ms, 50ms, 16ms at full load and 230VAC
Safety standards		UL60950-1, TUV EN60950-1 approved				
EMC standards		EN55022 class B, EN61000-3-2,3, EN61000-4-2,3,4,5,6,8,11				
Connection		8P/7.62mm pitch terminal block	9P/7.62mm pitch terminal block with cover		9P/9.5mm pitch terminal block with cover	
Dimension (LxWxH)(mm)		179x 99x 33	199x 99x 50		215x 115x 50	
Case No.		920A	916A	916B	912B	912I

75W — Triple Output

Model No.	Output	Tol.	R&N	Effi.	Max.
TP-75A	5V, 1.5~10A	±3%	100mV	70%	74W
	12V, 0.2~4.0A	±4%	120mV		
	-5V, 0.0~0.6A	±8%	100mV		
TP-75B	5V, 1.5~10A	±3%	100mV	70%	76W
	12V, 0.2~4.0A	±4%	120mV		
	-12V, 0.0~0.6A	±8%	120mV		
TP-75C	5V, 1.5~10A	±3%	100mV	70%	75W
	15V, 0.2~3.0A	±4%	120mV		
	-15V, 0.0~0.6A	±8%	120mV		
TP-75D	5V, 1.5~10A	±3%	100mV	70%	76W
	24V, 0.2~2.5A	±4%	120mV		
	12V, 0.0~0.6A	±8%	120mV		
TP-7503	5V, 1.5~10A	±3%	100mV	70%	75W
	3.3V, 0.2~8.0A	±4%	50mV		
	12V, 0.0~0.6A	±8%	120mV		

100W — Triple Output

Model No.	Output	Tol.	R&N	Effi.	Max.
TP-100A	5V, 3.0~15A	±3%	100mV	75%	101W
	12V, 0.4~5.0A	±7%	120mV		
	-5V, 0.0~1.0A	±6%	100mV		
TP-100B	5V, 3.0~15A	±3%	100mV	78%	105W
	12V, 0.4~5.0A	±6%	120mV		
	-12V, 0.0~1.0A	±6%	100mV		
TP-100C	5V, 3.0~15A	±3%	100mV	77%	104W
	15V, 0.4~4.0A	+10%,-6%	150mV		
	-15V, 0.0~1.0A	±6%	100mV		
TP-100D	5V, 3.0~15A	±3%	100mV	78%	105W
	24V, 0.4~3.0A	±8%	150mV		
	12V, 0.0~1.0A	±6%	100mV		

Enclosed-PFC

150W — Triple Output

Model No.	Output	Tol.	R&N	Effi.	Max.
TP-150A	5V, 2.0~20A	±3%	100mV	75%	150W
	12V, 0.4~7.0A	±8%	120mV		
	-5V, 0.0~1.0A	±6%	100mV		
TP-150B	5V, 2.0~20A	±3%	100mV	77%	148W
	12V, 0.4~7.0A	±8%	120mV		
	-12V, 0.0~1.0A	±6%	100mV		
TP-150C	5V, 2.0~20A	±3%	100mV	77%	152W
	15V, 0.4~6.0A	+10%,-6%	150mV		
	-15V, 0.0~1.0A	±6%	100mV		
TP-150D	5V, 2.0~20A	±3%	100mV	78%	154W
	24V, 0.4~4.0A	±8%	150mV		
	12V, 0.0~1.0A	±6%	100mV		

100W — Quad Output

Model No.	Output	Tol.	R&N	Effi.	Max.
QP-100B	5V, 2.0~10A	±3%	100mV	76%	101W
	12V, 0.3~4.0A	±6%	150mV		
	-12V, 0.15~1.0A	+10%,-6%	150mV		
	-5V, 0.0~1.0A	±5%	100mV		
QP-100C	5V, 2.0~10A	±3%	100mV	77%	101W
	15V, 0.3~3.0A	+6%,-10%	150mV		
	-15V, 0.15~1.0A	±8%	150mV		
	-5V, 0.0~1.0A	±5%	100mV		
QP-100D	5V, 2.0~10A	±3%	120mV	78%	100W
	12V, 0.0~3.0A	±3%	150mV		
	24V, 0.3~2.0A	±6%	200mV		
	-12V, 0.0~1.0A	±5%	150mV		
QP-100F	5V, 2.0~10A	±3%	120mV	78%	103W
	15V, 0.0~3.0A	±3%	180mV		
	24V, 0.3~2.0A	±6%	200mV		
	-15V, 0.0~1.0A	±5%	150mV		
QP-100-3A	5V, 2.0~10A	±3%	100mV	74%	99W
	3.3V, 0.0~10A	±3%	100mV		
	12V, 0.3~3.0A	±6%	150mV		
	-5V, 0.0~1.0A	±5%	150mV		
QP-100-3B	5V, 2.0~10A	±3%	100mV	74%	100W
	3.3V, 0.0~10A	±3%	100mV		
	12V, 0.3~3.0A	±6%	150mV		
	-12V, 0.0~1.0A	±5%	150mV		
QP-100-3C	5V, 2.0~10A	±3%	100mV	75%	101W
	3.3V, 0.0~10A	±3%	100mV		
	15V, 0.3~2.0A	+8%,-6%	150mV		
	-15V, 0.0~1.0A	±5%	150mV		
QP-100-3D	5V, 2.0~10A	±3%	100mV	75%	105W
	3.3V, 0.0~10A	±3%	100mV		
	24V, 0.3~2.0A	±6%	150mV		
	-12V, 0.0~1.0A	±5%	150mV		

150W — Quad Output

Model No.	Output	Tol.	R&N	Effi.	Max.
QP-150B	5V, 3.0~15A	±3%	100mV	76%	150W
	12V, 0.4~5.0A	±6%	150mV		
	-12V, 0.3~2.0A	+10%,-6%	150mV		
	-5V, 0.0~1.0A	±5%	100mV		
QP-150C	5V, 3.0~15A	±3%	100mV	77%	153W
	15V, 0.4~4.0A	+6%,-10%	150mV		
	-15V, 0.3~2.0A	±8%	150mV		
	-5V, 0.0~1.0A	±5%	100mV		
QP-150D	5V, 3.0~15A	±3%	120mV	78%	150W
	12V, 0.0~5.0A	±3%	150mV		
	24V, 0.4~3.0A	±6%	200mV		
	-12V, 0.0~1.0A	±5%	150mV		
QP-150F	5V, 3.0~15A	±3%	120mV	78%	152W
	15V, 0.0~5.0A	±3%	150mV		
	24V, 0.4~3.0A	±6%	200mV		
	-15V, 0.0~1.0A	±5%	150mV		

Model No.	Output	Tol.	R&N	Effi.	Max.
QP-150-3A	5V, 3.0~15A	±3%	100mV	73%	146W
	3.3V, 0.0~15A	±3%	100mV		
	12V, 0.4~5.0A	±6%	150mV		
	-5V, 0.0~1.0A	±5%	150mV		
QP-150-3B	5V, 3.0~15A	±3%	100mV	75%	150W
	3.3V, 0.0~15A	±3%	100mV		
	12V, 0.4~5.0A	±6%	150mV		
	-12V, 0.0~1.0A	±5%	150mV		
QP-150-3C	5V, 3.0~15A	±3%	100mV	74%	152W
	3.3V, 0.0~15A	±3%	100mV		
	15V, 0.4~5.0A	+8%,-6%	150mV		
	-15V, 0.0~1.0A	±5%	150mV		
QP-150-3D	5V, 3.0~15A	±3%	100mV	76%	150W
	3.3V, 0.0~15A	±3%	100mV		
	24V, 0.3~3.0A	±6%	150mV		
	-12V, 0.0~1.0A	±5%	150mV		

200W — Quad Output

Model No.	Output	Tol.	R&N	Effi.	Max.
QP-200D	5V, 3.0~20A	±3%	100mV	75%	203W
	12V, 0.0~7.0A	±3%	150mV		
	24V, 0.4~6.0A	+10%,-6%	150mV		
	-12V, 0.0~1.0A	±6%	150mV		
QP-200F	5V, 3.0~20A	±3%	100mV	75%	203W
	15V, 0.0~6.0A	±3%	150mV		
	24V, 0.4~6.0A	+10%,-6%	150mV		
	-15V, 0.0~1.0A	±6%	150mV		
QP-200-3A	5V, 3.0~20A	±3%	100mV	72%	200W
	3.3V, 0.0~20A	±3%	100mV		
	12V, 0.5~8.0A	+8%,-10%	150mV		
	-5V, 0.0~1.0A	±6%	150mV		
QP-200-3B	5V, 3.0~20A	±3%	100mV	72%	205W
	3.3V, 0.0~20A	±3%	100mV		
	12V, 0.5~8.0A	+8%,-10%	150mV		
	-12V, 0.0~1.0A	±6%	150mV		
QP-200-3C	5V, 3.0~20A	±3%	100mV	72%	210W
	3.3V, 0.0~20A	±3%	100mV		
	15V, 0.5~7.0A	+10%,-6%	150mV		
	-15V, 0.0~1.0A	±6%	150mV		
QP-200-3D	5V, 3.0~20A	±3%	100mV	74%	204W
	3.3V, 0.0~20A	±3%	100mV		
	24V, 0.4~6.0A	+10%,-6%	150mV		
	-12V, 0.0~1.0A	±6%	150mV		
QP-200-3E	5V, 3.0~20A	±3%	100mV	74%	206W
	3.3V, 0.0~20A	±3%	100mV		
	24V, 0.4~6.0A	+10%,-6%	150mV		
	-15V, 0.0~1.0A	±6%	150mV		

320W — Quad Output

Model No.	Output	Tol.	R&N	Effi.	Max.
QP-320D	5V, 2.5~20A	±3%	100mV	83%	316W
	12V, 0.0~10A	±3%	150mV		
	24V, 0.2~5.0A	+10%,-6%	150mV		
	-12V, 0.2~2.0A	±10%	150mV		
QP-320F	5V, 2.5~20A	±3%	100mV	83%	316W
	15V, 0.0~10A	±3%	150mV		
	24V, 0.2~5.0A	+10%,-6%	150mV		
	-15V, 0.2~1.6A	±10%	150mV		

Enclosed-PFC

75~200W High Reliability

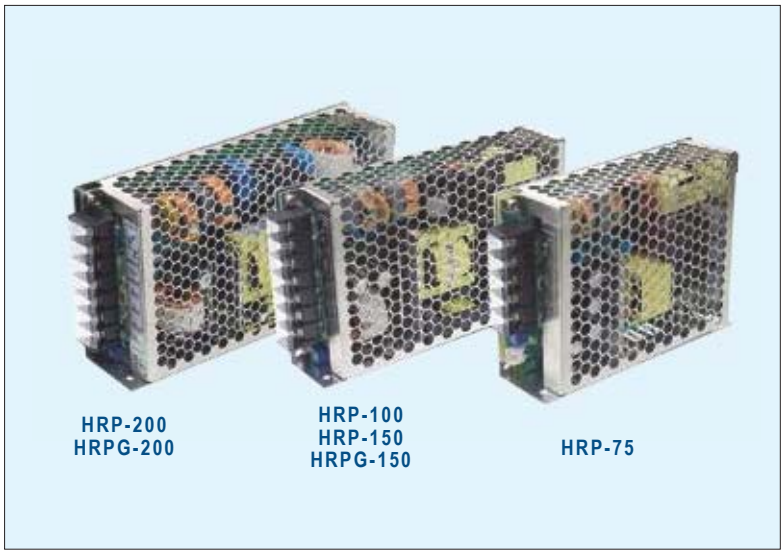

Features

- Universal AC input / Full range
- Withstand 300VAC surge input for 5 seconds
- Built-in active PFC function
- Protections:
  Short circuit / Overload / Over voltage /
  Over temperature (optional for HRP-75 / HRP-100)
- Built-in constant current limiting circuit
- Built-in remote sense function (HRP□-150 / 200)
- No load power consumption<0.5W (except for HRP-150/200)
- Built-in remote ON/OFF control (except for HRP-150 / 200)
- Built-in 5V / 0.3A standby output (HRPG-150 / 200)
- Cooling by free air convection
- 1U low profile
- LED indicator for power on
- 100% full load burn-in test
- 5 years warranty

General Specification (Please refer to www.meanwell.com for detail spec.)

Model No.		HRP-75	HRP-100	HRP□-150	HRP□-200
AC input voltage range		85~264VAC; 120~370VDC			
AC inrush current (max.)		Cold start, 65A at 230VAC		Cold start; 70A at 230VAC	
DC adjustment range		-5%~+10% rated output voltage		±15% rated output voltage	
Overload protection	Range	105%~135%			
	Type	Constant current limiting, auto-recovery			
Over voltage protection		115%~145%			
Withstand voltage		I/P-O/P: 3kVAC, I/P-FG: 1.5kVAC, O/P-FG: 0.5kVAC, 1 minute			
Working temperature		-40~+70°C (refer to output derating curve)	-40~+60°C	-40~+70°C	
Safety standards		UL60950-1, TUV EN60950-1 approved			
EMC standards		EN55022 class B, EN61000-4-2,3,4,5,6,8,11, EN61000-3-2,3, EN61000-6-2 heavy industry level			
Connection		5P/9.5mm pitch terminal block with cover	7P/9.5mm pitch terminal block with cover		
Dimension (LxWxH)(mm)		129x98x38	159x97x38		199x 98x 38
Case No.		903D	901I		902E

75W — HRP-75

Model No.	Output	Tol.	R&N	Effi.
HRP-75-3.3	3.3V, 0~15A	±2.5%	80mV	77.0%
HRP-75-5	5V, 0~15A	±2.5%	80mV	82.5%
HRP-75-7.5	7.5V, 0~10A	±2.5%	100mV	84.0%
HRP-75-12	12V, 0~6.3A	±1.5%	120mV	87.0%
HRP-75-15	15V, 0~5A	±1.5%	150mV	88.0%
HRP-75-24	24V, 0~3.2A	±1.5%	150mV	88.5%
HRP-75-36	36V, 0~2.1A	±1.5%	200mV	89.0%
HRP-75-48	48V, 0~1.6A	±1.5%	240mV	89.0%

150W — HRP□-150

Model No.	Output	Tol.	R&N	Effi.
HRP□-150-3.3	3.3V, 0~30A	±2.5%	80mV	78.5%
HRP□-150-5	5V, 0~26A	±2.5%	80mV	85.0%
HRP□-150-7.5	7.5V, 0~20A	±2.5%	100mV	87.0%
HRP□-150-12	12V, 0~13A	±1.5%	120mV	88.0%
HRP□-150-15	15V, 0~10A	±1.5%	150mV	88.0%
HRP□-150-24	24V, 0~6.5A	±1.5%	150mV	88.0%
HRP□-150-36	36V, 0~4.3A	±1.5%	200mV	89.0%
HRP□-150-48	48V, 0~3.3A	±1.5%	240mV	89.0%

□=blank, G; blank: basic function, G: with 5Vsb & no load <0.5W

100W — HRP-100

Model No.	Output	Tol.	R&N	Effi.
HRP-100-3.3	3.3V, 0~20A	+2.5%, -3.5%	80mV	78.0%
HRP-100-5	5V, 0~17A	±2.5%	80mV	83.0%
HRP-100-7.5	7.5V, 0~13.5A	±2.5%	100mV	84.0%
HRP-100-12	12V, 0~8.5A	±1.5%	120mV	87.5%
HRP-100-15	15V, 0~7A	±1.5%	150mV	88.0%
HRP-100-24	24V, 0~4.5A	±1.5%	150mV	88.5%
HRP-100-36	36V, 0~2.9A	±1.5%	200mV	89.0%
HRP-100-48	48V, 0~2.2A	±1.5%	240mV	90.0%

200W — HRP□-200

Model No.	Output	Tol.	R&N	Effi.
HRP□-200-3.3	3.3V, 0~40A	±2%	80mV	80.0%
HRP□-200-5	5V, 0~35A	±2%	90mV	84.0%
HRP□-200-7.5	7.5V, 0~26.7A	±2%	100mV	86.0%
HRP□-200-12	12V, 0~16.7A	±1%	120mV	88.0%
HRP□-200-15	15V, 0~13.4A	±1%	150mV	88.0%
HRP□-200-24	24V, 0~8.4A	±1%	150mV	88.0%
HRP□-200-36	36V, 0~5.7A	±1%	250mV	89.0%
HRP□-200-48	48V, 0~4.3A	±1%	250mV	89.0%

□=blank, G; blank: basic function, G: with 5Vsb & no load <0.5W

Enclosed-PFC

300~600W High Reliability

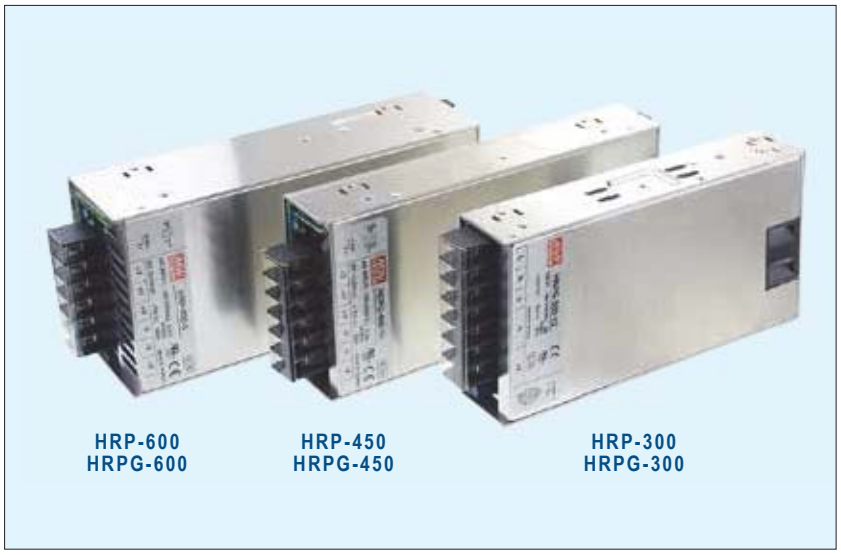

Features

- Universal AC input / Full range
- Withstand 300VAC surge input for 5 seconds
- Built-in active PFC function
- Protections: Short circuit / Overload / Over voltage / Over temperature
- Built-in constant current limiting circuit
- Built-in remote sense function
- Built-in DC OK signal
- No load power consumption<0.5W (HRPG-300 / 450)
  No load power consumption<0.75W (HRPG-600)
- Built-in remote ON/OFF control & 5V / 0.3A standby output (HRPG series)
- Built-in current sharing (HRPG-600-24 / 36 / 48)
- Forced air cooling by built-in DC fan
- 1U low profile (HRP☐-300 / 450)
- 100% full load burn-in test
- 5 years warranty

General Specification (Please refer to www.meanwell.com for detail spec.)

Model No.		HRP☐-300	HRP☐-450	HRP☐-600
AC input voltage range		85~264VAC; 120~370VDC		
AC inrush current (max.)		Cold start, 70A at 230VAC		
DC adjustment range		±15% rated output voltage		
Overload Protection	Range	105%~135%		
	Type	Constant current limiting, auto-recovery		
Over voltage protection		115%~145%		
Withstand voltage		I/P - O/P: 3kVAC, I/P - FG: 1.5kVAC, O/P - FG: 0.5kVAC, 1 minute		
Working temperature		-40~+70°C (refer to output derating curve)		
Safety standards		UL60950-1, TUV EN60950-1 approved		
EMC standards		EN55022 class B, EN61000-4-2,3,4,5,6,8,11, EN61000-3-2,3, EN61000-6-2 heavy industry level		
Connection		7P/11mm pitch terminal block with cover	3+6P/10&11mm pitch terminal block with cover	
Dimension (LxWxH)(mm)		199x105x41	218x105x41	218x105x63.5
Case No.		980A	995A	977A

300W — HRP☐-300

Model No.	Output	Tol.	R&N	Effi.
HRP☐-300-3.3	3.3V, 0~60A	±2.5%	80mV	80.0%
HRP☐-300-5	5V, 0~60A	±2.0%	90mV	82.0%
HRP☐-300-7.5	7.5V, 0~40A	±2.0%	100mV	86.0%
HRP☐-300-12	12V, 0~27A	±1.0%	120mV	88.0%
HRP☐-300-15	15V, 0~22A	±1.0%	150mV	88.0%
HRP☐-300-24	24V, 0~14A	±1.0%	150mV	87.0%
HRP☐-300-36	36V, 0~9A	±1.0%	250mV	88.0%
HRP☐-300-48	48V, 0~7A	±1.0%	250mV	89.0%

☐=blank, G; blank: basic function, G: with 5Vsb & no load <0.5W

450W — HRP☐-450

Model No.	Output	Tol.	R&N	Effi.
HRP☐-450-3.3	3.3V, 0~90A	±2%	80mV	80.0%
HRP☐-450-5	5V, 0~90A	±2%	80mV	83.0%
HRP☐-450-7.5	7.5V, 0~60A	±2%	100mV	86.5%
HRP☐-450-12	12V, 0~37.5A	±1%	120mV	88.0%
HRP☐-450-15	15V, 0~30A	±1%	150mV	89.0%
HRP☐-450-24	24V, 0~18.8A	±1%	150mV	88.0%
HRP☐-450-36	36V, 0~12.5A	±1%	240mV	89.0%
HRP☐-450-48	48V, 0~9.5A	±1%	240mV	89.5%

☐=blank, G; blank: basic function, G: with 5Vsb & no load <0.5W

600W — HRP☐-600

Model No.	Output	Tol.	R&N	Effi.
HRP☐-600-3.3	3.3V, 0~120A	±2%	100mV	78.5%
HRP☐-600-5	5V, 0~120A	±2%	100mV	82.0%
HRP☐-600-7.5	7.5V, 0~80A	±2%	100mV	87.0%
HRP☐-600-12	12V, 0~53A	±1%	120mV	88.0%
HRP☐-600-15	15V, 0~43A	±1%	150mV	88.0%
HRP☐-600-24	24V, 0~27A	±1%	150mV	88.0%
HRP☐-600-36	36V, 0~17.5A	±1%	200mV	89.0%
HRP☐-600-48	48V, 0~13A	±1%	240mV	89.0%

☐=blank, G; blank: basic function, G: with 5Vsb & no load <0.75W

We are a TQM (Total Quality Management) company and ISO-9001 certified since 1994.

Who can provide you better services and be a trustworthy partner in the power industry?
— "MEAN WELL" tries to be —

Best products also need best service.
We have authorized distributors all over the world. They have sufficient stock for your prompt delivery. Also they can offer you technical support & RMA services. Please contact your local distributors for more product information. You can also contact us at info@meanwell.com for information of your local distributors.

Enclosed-PFC

100~600W High Reliability Medical Type

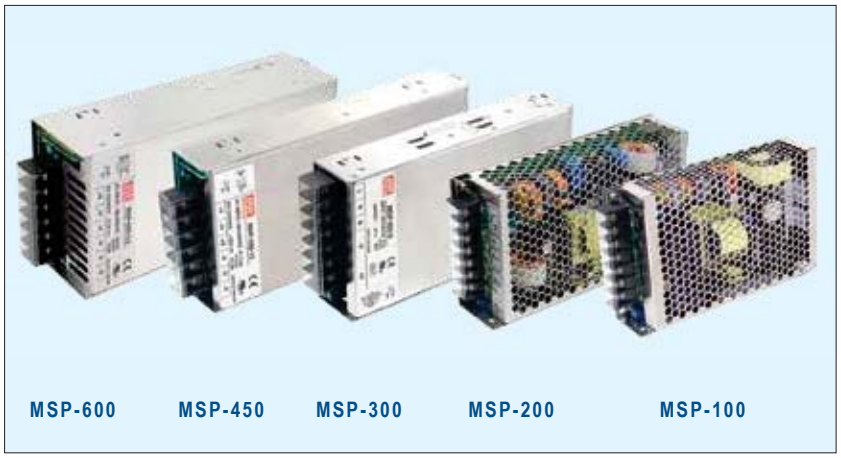

Features

- Universal AC input / Full range
- Medical safety approved (MOOP level)
- Low leakage current ≤300μA (≤450μA for MSP-300)
- Withstand 300VAC surge input for 5 seconds
- Built-in active PFC function
- Protections: Short circuit / Overload / Over voltage / Over temperature
- 1U low profile (MSP-100/200/300/450)
- Built-in constant current limiting circuit
- Built-in remote sense function (MSP-200/300/450/600)
- No load power consumption <0.5W (<0.6W for MSP-450 ; <0.8W for MSP-600)
- Built-in current sharing (MSP-600-24/36/48)
- Built-in remote ON/OFF control
- Built-in 5V/0.3A standby output (MSP-200/300/450/600)
- Built-in DC OK signal (MSP-300/450/600)
- LED indicator for power on
- 5 years warranty

General Specification (Please refer to www.meanwell.com for detail spec.)

Model No.		MSP-100	MSP-200	MSP-300	MSP-450	MSP-600
AC input voltage range		85~264VAC; 120~370VDC				
AC inrush current (max.)		Cold start, 65A at 230VAC	Cold start, 70A at 230VAC			Cold start, 80A at 230VAC
DC adjustment range		±15% rated output voltage				
Overload protection	Range	105%~135%				
	Type	Constant current limiting, auto-recovery				
Over voltage protection		115%~145%				
Withstand voltage		I/P-O/P: 4kVAC, I/P-FG: 2kVAC, O/P-FG: 0.5kVAC, 1 minute				
Working temperature		-40~+60°C	-40~+70°C (refer to output derating curve)			
Safety standards		ANSI/AAMI ES60601-1, IEC60601-1 approved				
EMC standards		EN55011 class B, EN61000-4-2,3,4,5,6,8,11, EN61000-3-2,3, EN60601-1-2				
Connection		7P / 9.5mm pitch terminal block with cover		7P / 11mm pitch terminal block with cover	3+6P / 10 &11mm pitch terminal block with cover	
Dimension (LxWxH)(mm)		159x 97x 38	199x 98x 38	199x 105x 41	218x 105x 41	218x 105x 63.5
Case No.		901I	902E	980A	995A	977A

100W — MSP-100

Model No.	Output	Tol.	R&N	Effi.
MSP-100-3.3	3.3V, 0~20A	+2.5%, -3.5%	80mV	78.0%
MSP-100-5	5V, 0~17A	+2.5%, -3.5%	80mV	83.0%
MSP-100-7.5	7.5V, 0~13.5A	±2.5%	100mV	84.0%
MSP-100-12	12V, 0~8.5A	±1.5%	120mV	87.5%
MSP-100-15	15V, 0~7A	±1.5%	150mV	88.0%
MSP-100-24	24V, 0~4.5A	±1.5%	150mV	88.5%
MSP-100-36	36V, 0~2.9A	±1.5%	200mV	89.0%
MSP-100-48	48V, 0~2.2A	±1.5%	240mV	90.0%

200W — MSP-200

Model No.	Output	Tol.	R&N	Effi.
MSP-200-3.3	3.3V, 0~40A	±2%	80mV	80.0%
MSP-200-5	5V, 0~35A	±2%	90mV	84.0%
MSP-200-7.5	7.5V, 0~26.7A	±2%	100mV	86.0%
MSP-200-12	12V, 0~16.7A	±1%	120mV	88.0%
MSP-200-15	15V, 0~13.4A	±1%	150mV	88.0%
MSP-200-24	24V, 0~8.4A	±1%	150mV	88.0%
MSP-200-36	36V, 0~5.7A	±1%	250mV	89.0%
MSP-200-48	48V, 0~4.3A	±1%	250mV	89.0%

300W — MSP-300

Model No.	Output	Tol.	R&N	Effi.
MSP-300-3.3	3.3V, 0~60A	±2.5%	80mV	80.0%
MSP-300-5	5V, 0~60A	±2%	90mV	82.0%
MSP-300-7.5	7.5V, 0~40A	±2%	100mV	86.0%
MSP-300-12	12V, 0~27A	±1%	120mV	88.0%
MSP-300-15	15V, 0~22A	±1%	150mV	88.0%
MSP-300-24	24V, 0~14A	±1%	150mV	87.0%
MSP-300-36	36V, 0~9A	±1%	250mV	88.0%
MSP-300-48	48V, 0~7A	±1%	250mV	89.0%

450W — MSP-450

Model No.	Output	Tol.	R&N	Effi.
MSP-450-3.3	3.3V, 0~90A	±2%	80mV	80.0%
MSP-450-5	5V, 0~90A	±2%	80mV	83.0%
MSP-450-7.5	7.5V, 0~60A	±2%	100mV	86.5%
MSP-450-12	12V, 0~37.5A	±1%	120mV	88.0%
MSP-450-15	15V, 0~30A	±1%	150mV	89.0%
MSP-450-24	24V, 0~18.8A	±1%	150mV	88.0%
MSP-450-36	36V, 0~12.5A	±1%	240mV	89.0%
MSP-450-48	48V, 0~9.5A	±1%	240mV	89.5%

600W — MSP-600

Model No.	Output	Tol.	R&N	Effi.
MSP-600-3.3	3.3V, 0~120A	±2%	100mV	78.5%
MSP-600-5	5V, 0~120A	±2%	100mV	82.0%
MSP-600-7.5	7.5V, 0~80A	±2%	100mV	86.0%
MSP-600-12	12V, 0~53A	±1%	120mV	88.0%
MSP-600-15	15V, 0~43A	±1%	150mV	88.0%
MSP-600-24	24V, 0~27A	±1%	150mV	88.0%
MSP-600-36	36V, 0~17.5A	±1%	200mV	89.0%
MSP-600-48	48V, 0~13A	±1%	240mV	89.0%

U-bracket-PFC

150~500W Single Output

USP-500 USP-350 USP-225 USP-150

Features

- Universal AC input / Full range
- Built-in active PFC
- Protections: Short circuit / Overload /Over voltage / Over temperature
- Output wattage:
  USP-150: 150W convection
  USP-225: 150W convection, 225W with 18CFM forced air
  USP-350: 300W convection, 350W with 23.5CFM forced air
  USP-500: 400W convection, 500W with 23.5CFM forced air
- High power density: 5.5W/in^3 (USP-150); 4.7W/in^3 (USP-225); 6.32W/in^3 (USP-350); 6.2W/in^3 (USP-500)
- U-bracket low profile: 33mm(USP-150); 38mm(USP-225/300); 41mm(USP-500)
- Built-in remote ON/OFF control, remote sense, DC OK signal (USP-500)
- Optional current sharing(1+1) for USP-500-24/48
- 3 years warranty

General Specification (Please refer to www.meanwell.com for detail spec.)

Model No.		USP-150	USP-225	USP-350	USP-500
AC input voltage range		90~295VAC; 127~417VDC	90~264VAC; 127~370VDC		
AC inrush current (max.)		Cold start, 65A at 230VAC	15A at 115VAC, 35A at 230VAC	22A at 115VAC, 44A at 230VAC	30A at 115VAC, 50A at 230VAC
DC adjustment range		±10% rated output voltage			
Overload protection	Range	110%~160%	105%~150%	105%~130%	
	Type	Hiccup mode, auto-recovery	Constant current limiting, auto-recovery		Constant current, shut off after 3 sec.
Over voltage protection	Range	110%~135%	110%~135%	110%~140%	115%~135%
	Type	Shut off, AC recycle to re-start		Hiccup mode, auto-recovery	Shut off, AC recycle to re-start
Withstand voltage		I/P - O/P: 3kVAC, I/P - FG: 1.5kVAC, O/P - FG: 0.5kVAC, 1 minute			
Working temperature		-30~+65°C	-20~+65°C	-10~+65°C	-20~+70°C
Vibration		10~500Hz, 2G 10min./1cycle, 60min. each along X, Y, Z axes			
Safety standards		UL60950-1, TUV EN60950-1(except for USP-150) approved			
EMC standards		EN55022 class B, EN61000-3-2,3, EN61000-4-2,3,4,5,6,8,11			
Connection		JST: SVH-21T-P1.1, 4P/7.62mm pitch terminal block	20P/2.54mm pitch, Molex 39-29-9206	5+9Px2/3.96mm pitch, JST: B5P/B9Px2-VH	3+8P/8.5mm pitch terminal block with cover
Dimension (LxWxH)(mm)		215x 67.4x 33	202x 101.5x 38	235.2x 101.5x 38	254x 127x 41

USP-150 Series

Model No.	Output	Tol.	R&N	Effi.
USP-150-12	12V, 0~12.5A	±2%	100mV	91.5%
USP-150-15	15V, 0~10.0A	±2%	150mV	91.5%
USP-150-24	24V, 0~6.30A	±2%	150mV	93.0%
USP-150-36	36V, 0~4.20A	±2%	250mV	93.0%
USP-150-48	48V, 0~3.20A	±2%	250mV	93.0%

USP-350 Series

Model No.	Output	Tol.	R&N	Effi.
USP-350-3.3	3.3V, 0~70.0A	±2%	80mV	78%
USP-350-5	5V, 0~70.0A	±2%	80mV	84%
USP-350-12	12V, 0~29.2A	±2%	100mV	88%
USP-350-15	15V, 0~23.4A	±2%	100mV	88%
USP-350-24	24V, 0~14.6A	±2%	150mV	88%
USP-350-48	48V, 0~7.30A	±2%	150mV	89%

USP-225 Series

Model No.	Output	Tol.	R&N	Effi.
USP-225-3.3	3.3V, 0~40.0A	±2%	100mV	72%
USP-225-5	5V, 0~40.0A	±2%	100mV	77%
USP-225-12	12V, 0~18.7A	±2%	100mV	83%
USP-225-15	15V, 0~15.0A	±2%	100mV	84%
USP-225-24	24V, 0~9.40A	±2%	150mV	85%
USP-225-48	48V, 0~4.70A	±2%	250mV	86%

USP-500 Series

Model No.	Output	Tol.	R&N	Effi.
USP-500-5	5V, 0~80.0A	±2%	80mV	85%
USP-500-12	12V, 0~42.0A	±2%	100mV	90%
USP-500-15	15V, 0~33.5A	±2%	100mV	90%
USP-500-24	24V, 0~21.0A	±2%	150mV	89%
USP-500-48	48V, 0~10.5A	±2%	150mV	90%

DIN Series

10~96W Miniature Single Output

Features

- Universal AC input / Full range
- Installed on DIN rail TS-35 / 7.5 or 15
- Protections: Short circuit / Overload / Over voltage
- No load power consumption <0.75W (<1W for MDR-100)
- LED indicator for power on
- Built-in active PFC and over temp. protection (MDR-100)
- Class I, Div 2 Hazardous Locations T4(MDR-40/60)
- DC OK signal output (MDR-10/20)
- DC OK relay contact (MDR-40/60/100)
- Cooling by free air convection
- 100% full load burn-in test
- 3 years warranty

General Specification (Please refer to www.meanwell.com for detail spec.)

Model No.	MDR-10	MDR-20	MDR-40	MDR-60	MDR-100
AC input voltage range	85~264VAC; 120~370VDC				
AC inrush current	Cold start, 35A at 115VAC, 70A at 230VAC	Cold start, 20A at 115VAC, 40A at 230VAC	Cold start, 30A at 115VAC, 60A at 230VAC		
DC adjustment range	Fixed	±10% rated output voltage	0~+20% rated output voltage		
Overload protection	>105% hiccup mode, auto-recovery	105%~160% constant current limiting, auto-recovery	105%~150% constant current limiting, auto-recovery		
Over voltage protection	115%~135% rated output voltage		125%~150% rated output voltage		
Setup, rise, hold up time	500ms, 30ms, 120ms	500ms, 30ms, 50ms			3000ms, 50ms, 50ms
Withstand voltage	I/P-O/P:3kVAC, I/P-FG:2kVAC, 1minute				
Working temperature	-20~+70°C (refer to output derating curve)				-10~+60°C
DC OK signal	Open collector		Relay contact		
Safety standards	UL508, TUV EN60950-1 approved; MDR-40/60 also approved for UL60950-1, ANSI/ISA 12.12.01-2013 Class I, Div. 2 Group A, B, C, D Hazardous Locations T4				
EMC standards	EN55022 class B, EN61000-3-2,3, EN61000-4-2,3,4,5,6,8,11, EN61204-3, EN61000-6-2 heavy industry level (MDR-40/60/100)				
Connection	I/P: 3 poles, O/P: 3 poles screw DIN terminal		IP: 3 poles, O/P: 6 poles screw DIN terminal		
Dimension (WxHxD)(mm)	22.5x90x100		40x90x100		55x90x100
Packing	72pcs / 13.2kg	72pcs / 14.7kg	42pcs / 13.6kg	42pcs / 14.8kg	30pcs / 13.6kg

MDR-10 Series

Model No.	Output	Tol.	R&N	Effi.
MDR-10-5	5V, 0~2.0A	±5%	80mV	77%
MDR-10-12	12V, 0~0.84A	±3%	120mV	81%
MDR-10-15	15V, 0~0.67A	±3%	120mV	81%
MDR-10-24	24V, 0~0.42A	±2%	150mV	84%

MDR-20 Series

Model No.	Output	Tol.	R&N	Effi.
MDR-20-5	5V, 0~3.0A	±2%	80mV	76%
MDR-20-12	12V, 0~1.67A	±1%	120mV	80%
MDR-20-15	15V, 0~1.34A	±1%	120mV	81%
MDR-20-24	24V, 0~1.00A	±1%	150mV	84%

MDR-40 Series

Model No.	Output	Tol.	R&N	Effi.
MDR-40-5	5V, 0~6.00A	±2%	80mV	78%
MDR-40-12	12V, 0~3.33A	±1%	120mV	86%
MDR-40-24	24V, 0~1.70A	±1%	150mV	88%
MDR-40-48	48V, 0~0.83A	±1%	200mV	88%

MDR-60 Series

Model No.	Output	Tol.	R&N	Effi.
MDR-60-5	5V, 0~10.0A	±2%	80mV	78%
MDR-60-12	12V, 0~5.00A	±1%	120mV	86%
MDR-60-24	24V, 0~2.50A	±1%	150mV	88%
MDR-60-48	48V, 0~1.25A	±1%	200mV	87%

MDR-100 Series

Model No.	Output	Tol.	R&N	Effi.
MDR-100-12	12V, 0~7.5A	±1%	120mV	83%
MDR-100-24	24V, 0~4.0A	±1%	150mV	86%
MDR-100-48	48V, 0~2.0A	±1%	200mV	87%

Energy Saving —
We care about energy saving. This logo represents that this model has "low no load power consumption"!

To satisfy our customers is our goal —
- High Quality
- Prompt Delivery
- Low Cost
- Best Service

DIN Series

15~100W Step Shape

DR-15 DR-30 DR-60 DR-100

Features

- Isolation Class II
- Universal AC input / Full range
- Protections: Short circuit / Overload / Over voltage / Over temp. (DR-100)
- No load power consumption<1W (DR-100)
  No load power consumption<0.5W (DR-15)
- Installed on DIN rail TS-35 / 7.5 or 15
- Cooling by free air convection
- LED indicator for power on
- 100% full load burn-in test
- Suitable for building automation and control of household appliance
- 3 years warranty

General Specification (Please refer to www.meanwell.com for detail spec.)

Model No.		DR-15	DR-30	DR-60	DR-100
AC input voltage range		85~264VAC; 120~370VDC		88~264VAC; 124~370VDC	
AC inrush current (max.)		Cold start, 65A at 230VAC	Cold start, 30A at 230VAC	Cold start, 36A at 230VAC	Cold start, 45A at 230VAC
DC adjustment range		±10% rated output voltage			12V: 12~15V, 15V: 15~18V, 24V: 24~29V
Overload protection	Range	105%~160%			105%~135%
	Type	constant current limiting, auto-recovery			
Over voltage protection	Range	115%~135% rated output voltage			125%~155% rated output voltage
	Type	Shut off, clamp by zener diode	Shut down, re-power on to recover		
Withstand voltage		I/P-O/P: 3kVAC			
Working temperature		-20~+60°C (refer to output load derating curve)			
Vibration		10~500Hz, 2G 10 min./1 cycle, period for 60 min. each along X, Y, Z axes			
Safety standards		UL60950-1, TUV60950-1 approved			
EMC standards		EN55022 class B, EN61000-3-2,3, EN61000-6-2, EN61000-4-2,3,4,5,6,8,11, EN61204-3			
Connection		I/P and O/P: 2 poles screw DIN terminal	I/P: 2 poles, O/P: 4 poles screw DIN terminal		
Dimension (WxHxD)(mm)		25x93x56	78x93x56		100x93x56
Case No.		985A	918B		970A
Packing		140pcs / 15.0kg	48pcs / 14.0kg	48pcs / 15.4kg	36pcs / 13.6kg

15W — DR-15

Model No.	Output	Tol.	R&N	Effi.
DR-15-5	5V, 0~2.40A	±2%	80mV	77.0%
DR-15-12	12V, 0~1.25A	±1%	120mV	84.0%
DR-15-15	15V, 0~1.00A	±1%	120mV	83.5%
DR-15-24	24V, 0~0.63A	±1%	150mV	85.0%

30W — DR-30

Model No.	Output	Tol.	R&N	Effi.
DR-30-5	5V, 0~3.0A	±2%	80mV	74%
DR-30-12	12V, 0~2.0A	±1%	120mV	81%
DR-30-15	15V, 0~2.0A	±1%	120mV	82%
DR-30-24	24V, 0~1.5A	±1%	150mV	83%

60W — DR-60

Model No.	Output	Tol.	R&N	Effi.
DR-60-5	5V, 0~6.5A	±2%	80mV	76%
DR-60-12	12V, 0~4.5A	±1%	120mV	82%
DR-60-15	15V, 0~4.0A	±1%	120mV	83%
DR-60-24	24V, 0~2.5A	±1%	150mV	84%

100W — DR-100

Model No.	Output	Tol.	R&N	Effi.
DR-100-12	12V, 0~7.5A	±2%	120mV	87%
DR-100-15	15V, 0~6.5A	±1%	120mV	87%
DR-100-24	24V, 0~4.2A	±1%	150mV	89%

We provide specification, drawing, test report and more information, please visit our website —
http://www.meanwell.com

Energy Saving —
We care about energy saving. This logo represents that this model has "low no load power consumption"!

DIN Series

45~480W Single Output

Features

- Universal AC input / Full range (DR-45/75, DRP-240)
  AC input selectable by switch (DR-120, DRP-480S)
  AC input 180~264VAC only (DRP-480)
- Built-in active PFC function (DRP-240)
- Built-in passive PFC function compliance to EN61000-3-2 (480W models)
- Protections: Short circuit / Overload / Over voltage / Over temperature
- Cooling by free air convection
- Can be installed on DIN rail TS-35 / 7.5 or 15
- UL508 (industrial control equipment) listed
- 100% full load burn-in test
- LED indicator for power on
- 3 years warranty

General Specification (Please refer to www.meanwell.com for detail spec.)

Model No.		DR-45	DR-75	DR-120	DRP-240	DRP-480	DRP-480S
AC input voltage range		85~264VAC(DR-45/75, DRP-240); 90~132/180~264VAC selectable by switch (DR-120, DRP-480S); 180~264VAC only (DRP-480)					
AC inrush current (230VAC)		56A	40A	40A	45A	40A	45A
DC adjustment range		±10%	12V: 12~14V, 24V: 24~28V, 48V: 48~53V				
Overload protection		105%~150% constant current limiting, auto-recovery					
Over voltage protection	Range	115%~142% rated output voltage			30~36V for 24V model, 54~60V for 48V model		
	Type	Shut off, AC recycle to re-start					
Over temp. protection		Shut down output voltage, recovers automatically after temperature goes down (DRP-240, re-power on to recover)					
Withstand voltage		I/P-O/P: 3kVAC, I/P-FG: 1.5kVAC, O/P-FG: 0.5kVAC, 1 minute					
Working temperature		-10~+50°C	-10~+60°C		-10~+70°C	-20~+70°C	
Safety standards		UL508, TUV EN60950-1 approved (UL60950-1 also for DR-120, DRP-240, DRP-480, DRP-480S)					
EMC standards		EN55022 class B, EN61000-3-2,3, EN61000-4-2,3,4,5,6,8,11, EN61000-6-2 heavy industry level					
Connection		I/P: 3 poles, O/P: 4 poles screw DIN terminal					
Dimension (WxHxD)(mm)		78x93x67	55.5x125.2x100	65.5x125.2x100	125.5x125.2x100	227x125.2x100	
Case No.		918A	923	921A	922A	930	
Packing		48pcs / 17.5kg	20pcs / 13.0kg	20pcs / 16.5kg	12pcs / 15.5kg	6pcs / 15.0kg	6pcs / 16.6kg

DR-45 Series

Model No.	Output	Tol.	R&N	Effi.
DR-4505	5V, 0~5.0A	±2%	100mV	72%
DR-4512	12V, 0~3.5A	±1%	200mV	77%
DR-4515	15V, 0~2.8A	±1%	240mV	77%
DR-4524	24V, 0~2.0A	±1%	480mV	80%

DR-75 Series

Model No.	Output	Tol.	R&N	Effi.
DR-75-12	12V, 0~6.3A	±2%	100mV	76%
DR-75-24	24V, 0~3.2A	±1%	150mV	80%
DR-75-48	48V, 0~1.6A	±1%	240mV	81%

DR-120 Series

Model No.	Output	Tol.	R&N	Effi.
DR-120-12	12V, 0~10A	±2%	80mV	80%
DR-120-24	24V, 0~5.0A	±1%	80mV	84%
DR-120-48	48V, 0~2.5A	±1%	100mV	85%

DRP-240 Series

Model No.	Output	Tol.	R&N	Effi.
DRP-240-24	24V, 0~10A	±1%	80mV	84%
DRP-240-48	48V, 0~5.0A	±1%	150mV	85%

DRP-480 Series

Model No.	Output	Tol.	R&N	Effi.
DRP-480-24	24V, 0~20A	±1%	120mV	89%
DRP-480-48	48V, 0~10A	±1%	120mV	89%

DRP-480S Series

Model No.	Output	Tol.	R&N	Effi.
DRP-480S-24	24V, 0~20A	±1%	120mV	89%
DRP-480S-48	48V, 0~10A	±1%	120mV	89%

Customer Satisfaction —
Today's effort, tomorrow's reward. Continuously improve CQTS to satisfy customer is our goal.

DIN Series

120~960W High Input Voltage

DRH-120 DRT-240 DRT-480 DRT-960

Features

- Input 340~550VAC, 3-phase (2-phase for DRH-120)
- Protections: Short circuit / Overload / Over voltage / Over temperature
- Built-in constant current limiting circuit
- Cooling by free air convection
- Can be installed on DIN rail TS-35 / 7.5 or 15
- UL508 (industrial control equipment) listed (240~960W)
- EN61000-6-2 (EN50082-2) industrial immunity level
- Optional parallel function (1+1) (960W only)
- 100% full load burn-in test
- LED indicator for power on
- 3 years warranty

General Specification (Please refer to www.meanwell.com for detail spec.)

Model No.		DRH-120	DRT-240	DRT-480	DRT-960
AC input voltage range		340~550VAC, two phase	340~550VAC, 3-phase (two phase operation possible)		
AC inrush current (max.)		Cold start, 50A at 400VAC			
DC adjustment range		24V: 24~28V, 48V: 48~55V			
Overload protection	Range	105%~160%	105%~150%		105%~125%
	Type	Constant current limiting, auto-recovery			Constant current limiting, delay shut off after 3 sec.
Over voltage protection	Range	24V: 30~36V, 48V: 59~66V			
	Type	Shut off, AC recycle to re-start			
Over temperature protection		Shut down output voltage, recovers automatically after temperature goes down			
Withstand voltage		I/P - O/P: 3kVAC, I/P - FG: 1.5kVAC, O/P - FG: 0.5kVAC, 1 minute			
Working temperature		-20~+60°C	-20~+70°C		-20~+60°C
Safety standards		UL60950-1 approved	UL508, UL60950-1, TUV EN60950-1 approved		
EMC standards		EN55022 class B, EN61000-3-2,3, EN61000-4-2,3,4,5,6,8,11, EN61204-3, EN61000-6-2 heavy industry level			
Connection (screw DIN terminal)		I/P: 3 poles, O/P: 4 poles	I/P: 4 poles, O/P: 4 poles		I/P: 4 poles, O/P: 6 poles
Dimension (WxHxD)(mm)		65.5x125.2x100	125.5x125.2x100	227x125.2x100	276x125.2x100
Case No.		921A	922A	930A	934
Packing		20pcs / 16.0kg	12pcs / 16.6kg	6pcs / 16.0kg	4pcs / 14.2kg

DRH-120 (Two Phase)

Model No.	Output	Tol.	R&N	Effi.
DRH-120-24	24V, 0~5.0A	±1%	80mV	85%
DRH-120-48	48V, 0~2.5A	±1%	80mV	86%

DRT-240 (Three Phase)

Model No.	Output	Tol.	R&N	Effi.
DRT-240-24	24V, 0~10A	±1%	80mV	89%
DRT-240-48	48V, 0~5.0A	±1%	80mV	89%

DRT-480 (Three Phase)

Model No.	Output	Tol.	R&N	Effi.
DRT-480-24	24V, 0~20A	±1%	80mV	89%
DRT-480-48	48V, 0~10A	±1%	80mV	90%

DRT-960 (Three Phase)

Model No.	Output	Tol.	R&N	Effi.
DRT-960-24	24V, 0~40A	±1%	80mV	91%
DRT-960-48	48V, 0~20A	±1%	80mV	92%

Best products also need best service.
We have authorized distributors all over the world. They have sufficient stock for your prompt delivery. Also they can offer you technical support & RMA services. Please contact your local distributors for more product information. You can also contact us at info@meanwell.com for information of your local distributors.

We provide specification, drawing, test report and more information, please visit our website —
http://www.meanwell.com

48hrs delivery—
We keep enough stock for 95% of standard models at our 2400m² warehouse. We can arrange prompt delivery within 48hrs.

DIN Series

75~150W Slim and Economical

EDR-75 EDR-120 EDR-150

Features

- Universal AC input / Full range
- Protections: Short circuit / Overload / Over voltage / Over temperature
- Cooling by free air convection
- Can be installed on DIN rail TS-35 / 7.5 or 15
- UL508 (industrial control equipment) listed
- EN61000-6-2 (EN50082-2) industrial immunity level
- 100% full load burn-in test
- Low cost
- 2 years warranty

General Specification (Please refer to www.meanwell.com for detail spec.)

Model No.		EDR-75	EDR-120	EDR-150
AC input voltage range		90~264VAC; 127~370VDC		
AC inrush current (max.)		Cold start, 35A at 230VAC		
DC adjustment range		12V: 12~14V, 24V: 24~28V, 48V: 48~55V		
Overload protection	Range	105%~130%		
	Type	Constant current limiting, auto-recovery		
Over voltage protection	Range	12V: 14~17V, 24V: 29~33V, 48V: 56~65V		24V: 29~33V
	Type	Shut down o/p voltage, re-power on to recover		
Over temperature protection		Shut down o/p voltage, re-power on to recover		
Withstand voltage		I/P-O/P: 3kVAC, I/P-FG: 2kVAC, O/P-FG: 0.5kVAC		
Working temperature		-20~+60°C (refer to output derating curve)		
Safety standards		UL508, TUV EN60950-1 approved		
EMC standards		EN55022 classA, EN61000-3-2(125W for EDR-150),3, EN61000-4-2,3,4,5,6,8,11, EN61000-6-2(EN50082-2)		
Connection (screw DIN terminal)		I/P: 3 poles, O/P: 4 poles		
Dimension (WxHxD)(mm)		32x 125.2x 102	40x 125.2x 113.5	
Case No.		221B	992D	
Packing		28pcs / 15.3kg	20pcs / 13kg	

75W — EDR-75

Model No.	Output	Tol.	R&N	Effi.
EDR-75-12	12V, 0~6.3A	±2.0%	100mV	85.5%
EDR-75-24	24V, 0~3.2A	±1.0%	120mV	87.5%
EDR-75-48	48V, 0~1.6A	±1.0%	150mV	88.5%

120W — EDR-120

Model No.	Output	Tol.	R&N	Effi.
EDR-120-12	12V, 0~10A	±2.0%	100mV	85.0%
EDR-120-24	24V, 0~5A	±1.0%	120mV	87.5%
EDR-120-48	48V, 0~2.5A	±1.0%	150mV	88.5%

150W — EDR-150

Model No.	Output (230VAC/115VAC)	Tol.	R&N	Effi.
EDR-150-24	24V, 0~6.5A / 0~5.2A	±1.0%	150mV	87%

Best products also need best services.
We have authorized distributors all over the world.
They have sufficient stock for your prompt delivery.
Also they can offer you technical support & RMA services.
Please contact your local distributors for more product information. You can also contact us at info@meanwell.com for information of your local distributors.

We are a TQM (Total Quality Management) company and ISO-9001 certified since 1994.

Who can provide you better services and be a trustworthy partner in the power industry?
— "MEAN WELL" tries to be —

We provide specification, drawing, test report and more information, please visit our website —
http://www.meanwell.com

48hrs delivery—
We keep enough stock for 95% of standard models at our 2400m² warehouse. We can arrange prompt delivery within 48hrs.

DIN Series

75~480W Slim and Economical

Features

- Universal AC input / Full range
- Built-in active PFC function(NDR-240/480)
- High efficiency up to 92.5%
- Protections: Short circuit / Overload / Over voltage / Over temperature
- Cooling by free air convection
- Can be installed on DIN rail TS-35 / 7.5 or 15
- UL508 (industrial control equipment) listed
- EN61000-6-2 (EN50082-2) industrial immunity level
- 100% full load burn-in test
- 3 years warranty

General Specification (Please refer to www.meanwell.com for detail spec.)

Model No.		NDR-75	NDR-120	NDR-240	NDR-480
AC input voltage range		90~264VAC; 127~370VDC			
AC inrush current (max.)		Cold start, 35A at 230VAC			
DC adjustment range		12V: 12~14V, 24V: 24~28V, 48V: 48~55V			
Overload protection	Range	105%~130%			
	Type	Constant current limiting, auto-recovery			Constant current limiting, shut off after 3 sec., re-power on to recover
Over voltage protection	Range	12V: 14~17V, 24V: 29~33V, 48V: 56~65V			
	Type	Shut down o/p voltage, re-power on to recover			
Over temperature protection		Shut down o/p voltage, re-power on to recover		Shut down o/p voltage, auto-recovery	
Withstand voltage		I/P-O/P: 3kVAC, I/P-FG: 2kVAC, O/P-FG: 0.5kVAC			
Working temperature		-20~+70°C (refer to output derating curve)			
Safety standards		UL508, TUV EN60950-1 approved			
EMC standards		EN55022 class B, EN61000-3-2,3, EN61000-4-2,3,4,5,6,8,11, EN61000-6-2(EN50082-2), EN61204-3			
Connection (screw DIN terminal)		I/P: 3 poles, O/P: 4 poles			
Dimension (WxHxD)(mm)		32x 125.2x 102	40x 125.2x 113.5	63x 125.2x 113.5	85.5x 125.2x 128.5
Case No.		221B	992D	979C	984D
Packing		28pcs / 15.3kg	20pcs / 13kg	12pcs / 13kg	8pcs / 15.4kg

NDR-75 Series

Model No.	Output	Tol.	R&N	Effi.
NDR-75-12	12V, 0~6.3A	±2.0%	100mV	85.5%
NDR-75-24	24V, 0~3.2A	±1.0%	150mV	88.0%
NDR-75-48	48V, 0~1.6A	±1.0%	240mV	89.0%

NDR-120 Series

Model No.	Output	Tol.	R&N	Effi.
NDR-120-12	12V, 0~10A	±2.0%	100mV	85.5%
NDR-120-24	24V, 0~5A	±1.0%	120mV	88.0%
NDR-120-48	48V, 0~2.5A	±1.0%	150mV	89.0%

NDR-240 Series

NEW

Model No.	Output	Tol.	R&N	Effi.
NDR-240-24	24V, 0~10A	±1.0%	150mV	88.5%
NDR-240-48	48V, 0~5A	±1.0%	150mV	90.0%

NDR-480 Series

NEW

Model No.	Output	Tol.	R&N	Effi.
NDR-480-24	24V, 0~20A	±1.0%	150mV	92.5%
NDR-480-48	48V, 0~10A	±1.0%	150mV	92.5%

Customer Satisfaction —
Today's effort, tomorrow's reward. Continuously improve CQTS to satisfy customer is our goal.

Products —
• One Stop Shopping • Total Solution

DIN Series

75~960W Slim and High Efficiency

Features

- High efficiency up to 94%
- Universal AC input / Full range (SDR-75/120/240/480)
  AC input 180~264VAC only (SDR-960)
- Built-in active PFC function (SDR-120/240/480/960)
- Protections: Short circuit / Overload /
  Over voltage / Over temperature
- Cooling by free air convection
- Can be installed on DIN rail TS-35 / 7.5 or 15
- UL508(industrial control equipment) approved
- EN61000-6-2(EN50082-2) industrial immunity level
- Built-in DC OK relay contact (except for SDR-75)
- 150% peak load capability (SDR-75/120/240/480)
  130% peak load capability (SDR-960)
- Current sharing up to 3840W (7+1) for SDR-480P
  Current sharing up to 3840W (3+1) for SDR-960
- Comply with GL (SDR-120/240/480)
  Comply with SEMI F47 (SDR-75/120/240/480)
- 3 years warranty

General Specification (Please refer to www.meanwell.com for detail spec.)

Model No.		SDR-75	SDR-120	SDR-240	SDR-480□	SDR-960
AC input voltage range		88~264VAC; 124~370VDC			90~264VAC; 127~370VDC	180~264VAC; 254~370VDC
AC inrush current (max.)		Cold start, 50A at 230VAC	Cold start, 70A at 230VAC	Cold start, 65A at 230VAC	Cold start, 80A at 230VAC	Cold start, 50A at 230VAC
DC adjustment range		12V: 12~14V (only for SDR-75/120), 24V: 24~28V, 48V: 48~55V				
Overload protection		Normally works within 110%~150% rated output power for 3 seconds and then shut down output voltage with auto-recovery (re-power on to recover for SDR-75)				Normally works within 105%~130% rated output power for 3 seconds and then shut down o/p voltage with auto-recovery after 30 seconds if the peak load condition is removed
		>150% rated power or short circuit, constant current limiting with auto-recovery within 2 seconds and may cause to shut down if over 2 seconds				Constant current limiting within 130%~150% rated output power for more than 3 seconds and then shut down o/p voltage, re-power on to recover
Over voltage protection	Range	14~17V for 12V model(SDR-75/120), 29~33V for 24V model, 56~65V for 48V model				
	Type	Shut down o/p voltage, re-power on to recover		Shut down o/p voltage with auto-recovery, or re-power on to recover		
Over temperature protection		Re-power on to recover	Recovers automatically after temperature goes down			
Withstand voltage		I/P-O/P:3kVAC, I/P-FG:1.5kVAC, O/P-FG:0.5kVAC, O/P-DC OK:0.5kVAC (except for SDR-75)				
Working temperature		-30~+70°C	-25~+70°C (refer to output derating curve)			-30~+70°C
Safety standards		UL508, TUV EN60950-1, GL (SDR-120/240/480) approved				
EMC standards		EN55011(SDR-120/240/480), EN55022 class B, EN61000-3-2,3, EN61000-4-2,3,4,5,6,8,11, EN61000-6-2 (EN50082-2), EN61204-3; SEMI (SDR-75/120/240/480), GL (SDR-120/240/480)				
Connection (screw DIN terminal)		I/P: 3 poles, O/P: 4 poles		I/P: 3 poles, O/P: 6 poles	I/P: 3 poles, O/P: 8 poles	I/P:3 poles, O/P: 6 poles
Dimension (WxHxD)(mm)		32x125.2x102	40x125.2x113.5	63x125.2x113.5	85.5x125.2x128.5	110x125.2x150

SDR-75 Series

Model No.	Output	Tol.	R&N	Effi.
SDR-75-12	12V, 0~6.3A	±1.0%	100mV	88.5%
SDR-75-24	24V, 0~3.2A	±1.0%	100mV	89.0%
SDR-75-48	48V, 0~1.6A	±1.0%	120mV	90.0%

SDR-120 Series

Model No.	Output	Tol.	R&N	Effi.
SDR-120-12	12V, 0~10A	±1.0%	100mV	89.0%
SDR-120-24	24V, 0~ 5A	±1.0%	100mV	91.0%
SDR-120-48	48V, 0~2.5A	±1.0%	120mV	90.5%

SDR-240 Series

Model No.	Output	Tol.	R&N	Effi.
SDR-240-24	24V, 0~10A	±1.0%	100mV	94%
SDR-240-48	48V, 0~5A	±1.0%	120mV	94%

SDR-480 Series

Model No.	Output	Tol.	R&N	Effi.
SDR-480□-24	24V, 0~20A	±1.2%	100mV	94%
SDR-480□-48	48V, 0~10A	±1.0%	120mV	94%

□=blank, P ; Blank: basic function, P: with parallel function

SDR-960 Series

Model No.	Output	Tol.	R&N	Effi.
SDR-960-24	24V, 0~40A	±1.0%	180mV	94%
SDR-960-48	48V, 0~20A	±1.0%	250mV	94%

DIN Series

120~480W Slim and Wide Input Range

WDR-120 WDR-240 WDR-480

Features

- Single and two phase wide input range 180~550VAC
- Built-in active PFC function (WDR-240/480)
- Protections: Short circuit / Overload / Over voltage / Over temperature
- Cooling by free air convection
- Built-in constant current limiting circuit
- Can be installed on DIN rail TS-35 / 7.5 or 15
- UL508(industrial control equipment) approved
- EN61000-6-2(EN50082-2) industrial immunity level
- Built-in DC OK relay contact
- 100% full load burn-in test
- 3 years warranty

General Specification (Please refer to www.meanwell.com for detail spec.)

Model No.		WDR-120	WDR-240	WDR-480
AC input voltage range		180~550VAC(single and two phase); 254~780VDC		
AC input current		0.55A / 400VAC, 1.2A / 230VAC	1A / 400VAC, 2A / 230VAC	1.6A / 400VAC, 4A / 230VAC
AC inrush current (max.)		Cold start, 50A at 400VAC		
DC adjustment range		12V: 12~15V, 24V: 24~29V, 48V: 48~58V	24V: 24~28V, 48V: 48~55V	
Overload protection		105%~130% rated output power, constant current limiting, auto-recovery	105%~130% rated output power, constant current limiting, unit will shut down after 3 sec.; auto-recovery after 1 minute if the fault condiction is removed.	
Over voltage protection	Range	16~18V for 12V model (only for WDR-120), 29~33V for 24V model, 56~65V for 48V model		
	Type	Shut down o/p voltage, auto-recovery	Shut down o/p voltage, auto-recovery after 1 minute if the fault condition is removed	
Setup, rise, hold up time		2000ms, 70ms, 10ms at full load and 230VAC; 2000ms, 70ms, 50ms at full load and 400VAC	1500ms, 150ms, 18ms at full load and 230VAC; 800ms, 150ms, 18ms at full load and 400VAC	2000ms, 150ms, 16ms at full load and 230VAC; 800ms, 150ms, 18ms at full load and 400VAC
Over temp. protection		Shut down output voltage, recovers automatically after temperature goes down		
Withstand voltage		I/P-O/P:3kVAC, I/P-FG:1.5kVAC, O/P-FG:0.5kVAC, O/P-DC OK:0.5kVAC, 1 minute		
Isolation resistance		100MΩ(min.)@500VDC		
Working temperature		-25~+70°C (refer to output derating curve)	-30~+70°C (refer to output derating curve)	
DC OK signal		Relay Contact		
Leakage current		<3.5mA at 530VAC		
Vibration		10~500Hz, 2G 10 minutes / 1 cycle, period of 60 minutes each along X, Y, Z axes		
Safety standards		UL508 approved ; IEC60950-1 CB approved by SIQ ; Design refer to GL		
EMC standards		EN55022 class B, EN61000-3-2,3, EN61000-4-2,3,4,5,6,8,11, EN61000-6-2 (EN50082-2), EN61204-3, heavy industry level		
Connection (screw DIN terminal)		I/P: 3 poles, O/P: 4 poles	I/P: 3 poles, O/P: 6 poles	
Dimension (WxHxD)(mm)		40x125.2x113.5	63x125.2x113.5	85.5x125.2x128.5
Packing		20pcs / 14kg	12pcs / 13.7kg	8pcs / 14.6kg

WDR-120 Series

Model No.	Output	Tol.	R&N	Effi.
WDR-120-12	12V, 0~10A	±1.5%	120mV	89.5%
WDR-120-24	24V, 0~5A	±1.0%	120mV	91%
WDR-120-48	48V, 0~2.5A	±1.0%	150mV	92%

WDR-240 Series

Model No.	Output	Tol.	R&N	Effi.
WDR-240-24	24V, 0~10A	±1.0%	150mV	91%
WDR-240-48	48V, 0~5A	±1.0%	150mV	91%

WDR-480 Series

Model No.	Output	Tol.	R&N	Effi.
WDR-480-24	24V, 0~20A	±1.0%	100mV	92%
WDR-480-48	48V, 0~10A	±1.0%	150mV	93%

Customer Satisfaction —
Today's effort, tomorrow's reward. Continuously improve CQTS to satisfy customer is our goal.

To satisfy our customers is our goal —
- High Quality
- Low Cost
- Prompt Delivery
- Best Service

DIN Series

960W High Input Voltage / 40 & 60W Output Current Programmable

960W High Input Voltage

- Input 340~550VAC, 3-phase
- Width only 110mm
- Built-in active PFC function
- High efficiency up to 94.5%
- Protections: Short circuit / Overload / Over voltage / Over temp.
- Cooling by free air convection
- Installed on DIN rail TS-35 / 7.5 or 15
- EN61000-6-2(EN50082-2) industrial immunity level
- Current sharing up to 3840W (3+1)
- Built-in DC OK relay contact
- 3 years warranty

CASE: 214A 110x 125.2x 150 mm

AC input voltage range ..... 340~550VAC, 3-phase (2-phase operation possible)
AC input current (Typ.)..... 2A / 400VAC, 1.4A / 500VAC
AC inrush current ..... Cold start, 60A at 400VAC
DC adjustment range ..... 24V: 24~28V, 48V: 48~55V
Overload protection ..... 105%~130% rated output power, constant current limiting, unit will shut down after 3 sec., re-power on to recover
Over voltage protection ..... 29~33V (24V model), 56~65V (48V model), shut down o/p voltage, re-power on to recover
Over temperature..... Shut down o/p voltage, recovers automatically after temperature goes down
Withstand voltage..... I/P-O/P:3kVAC I/P-FG:2kVAC O/P-FG: 0.5kVAC, O/P-DC OK: 0.5kVAC
Working temperature ..... -30~+70°C (refer to output derating curve)
Safety standards..... UL508 approved; IEC60950-1 CB approved by SIQ
EMC standards ..... EN55022 class B, EN61000-3-2,3, EN61000-4-2,3,4,5,6,8,11, EN61000-6-2 (EN50082-2), EN61204-3, heavy industry level
Connection ..... I/P: 3 poles, O/P: 6 poles screw DIN terminal

Model No.	Output	Tol.	R&N	Effi.
TDR-960-24	24V, 0~40A	±1.0%	180mV	94.0%
TDR-960-48	48V, 0~20A	±1.0%	250mV	94.5%

Best products also need best services.
We have authorized distributors all over the world.
They have sufficient stock for your prompt delivery.
Also they can offer you technical support & RMA services.
Please contact your local distributors for more product information. You can also contact us at info@meanwell.com for information of your local distributors.

40 & 60W Output Current Programmable

- Universal AC input / Full range
- Io can be trimmed 10~100% by 1~10Vdc, PWM signal or resistance
- Installed on DIN rail TS-35 / 7.5 or 15
- Protections: Short circuit / Overload / Over voltage
- Pass LPS
- Cooling by free air convection
- LED indicator for power on
- 100% full load burn-in test
- Suitable for machine vision inspection system and plant cultivation application
- 3 years warranty

CASE: 962A 40x 90x 100mm

AC input voltage range ..... 90~264VAC; 127~370VDC
AC inrush current ..... Cold start, 60A at 230VAC
DC adjustment range ..... 12V: 12~15V, 24V: 24~30V
Current adjustment range ..... 10%~100% rated output current adjustable by 1~10Vdc, PWM signal or resistance
Overload protection ..... 95%~108% rated output power, constant current limiting, auto-recovery
Over voltage protection..... 120%~155% rated output power, shut down o/p voltage, re-power on to recover
Withstand voltage ..... I/P-O/P: 3kVAC, I/P-FG: 2kVAC, O/P-FG: 0.5kVAC
Working temperature ..... -30~+70°C (refer to output derating curve)
Safety standards ..... UL60950-1, TUV EN60950-1 approved
EMC standards ..... EN55022 class B, EN61000-3-2,3, EN61000-4-2,3,4,5,6,8,11, EN61204-3
Connection ..... I/P: 3 poles, O/P: 6 poles screw DIN terminal

❖ DRA-40 Series

Model No.	Output	Tol.	R&N	Effi.
DRA-40-12	12V, 0~3.34A	±1.0%	120mV	85%
DRA-40-24	24V, 0~1.7A	±1.0%	150mV	87%

❖ DRA-60 Series

Model No.	Output	Tol.	R&N	Effi.
DRA-60-12	12V, 0~5A	±1.0%	120mV	85%
DRA-60-24	24V, 0~2.5A	±1.0%	150mV	87%

We provide specification, drawing, test report and more information, please visit our website —
http://www.meanwell.com

Products —
- One Stop Shopping
- Total Solution

Customer Satisfaction —
Today's effort, tomorrow's reward. Continuously improve CQTS to satisfy customer is our goal.

20A Power Supply Redundancy Module

- Suitable for redundant operation of 24V system
- Installed on DIN rail TS-35 / 7.5 or 15
- Relay contact signal output and LED indicator for input failure alarm
- Cooling by free air convection
- 3 years warranty

DC input voltage range .....21~28V, 20A max. x 2 channels
Reverse voltage 30V
DC output current ..... 20A max.
DC output voltage drop ..... 0.6V max.
Input voltage alarm ..... When input is > 20V(±5%) and <30V(±5%), relay contacts
Relay contact rating 30VDC, 1A
Working temperature .....-40~+70°C
Safety standard .....UL508 approved
EMC standards .....EN55022 class B, EN61000-4-2,3,4,5,6,8,11
Connection .....I/P: 4 poles, O/P: 2 poles screw DIN terminal, Single output: 4 poles

Model No.	Output	Reverse Voltage	Current
DR-RDN20	24V, 20A	30V max.	20A max.

Feature Description

DR-RDN20 is a 20A redundancy (decoupling) module for the 24VDC power system. Containing 2 sets of 20A Or-ing diodes with wonderful heat dissipation deployment, DR-RDN20 offers a safe option of 1+1 redundant set-up. Not only perfectly decouple power sources from each other as well as from the load, DR-RDN-20 also provides users monitoring signals for both input channels through the built-in relays.

DR-UPS40 is a 40A max. DC UPS (battery control) module for the 24VDC power system. Accompany with external batteries, it can back-up up to 40A of current to critical loads for certain period of time depending on the capacity of batteries. With complete monitoring signals / LED indicators for DC BUS OK, Battery Fail, Battery Discharge, and the repeated Battery Test function to check the situation of external batteries, users can customize their own DC UPS system to back up critical loads and capture the status of the whole system easily.

To satisfy our customers is our goal —
- High Quality
- Prompt Delivery
- Low Cost
- Best Service

40A DC UPS Module

- Battery controller for DIN rail UPS system
- Parallel connected to DC BUS
- Suitable for 24V system up to 40A
- Installed on DIN Rail TS-35 / 7.5 or 15
- Built-in battery test function
- Battery polarity protection
- Relay contact signal output and LED indicator for DC BUS OK, Battery Fail, and Battery Discharge
- Cooling by free air convection
- 3 years warranty

DC input / DC bus ..... 24~29V, 40A max.
Battery input voltage ..... 21~29V
Battery input Current ..... 0~40A
Charge current (typ.) 2A
External battery (typ.) ..... 24V, 4AH / 7AH / 12AH
DC bus ok ..... Relay status : Short when DC voltage between 21~29V(±3%), relay contacts
LED(Green) : DC bus OK : light; DC bus fail : dark
Battery fail ..... Relay status : Short when battery failure is observed through the battery test function, relay contacts
LED(Red) : Battery over-discharge warning or battery broken: light; Battery OK: dark
Battery discharge ..... Relay status : Short when battery in discharge condition, relay contacts
LED(Yellow) : Battery discharging: light; Battery is not discharging or discharging current <2A: dark
Working temperature ..... -20~+70°C
EMC standards ..... EN55022 class B, EN61000-4-2,3,4,5,6,8,11
Connection ..... I/P: 2 poles, O/P: 2 poles screw DIN terminal, Single output: 6 poles

Model No.	DC BUS Voltage	DC BUS Current
DR-UPS40	24~29V	40A max.

Block Diagram

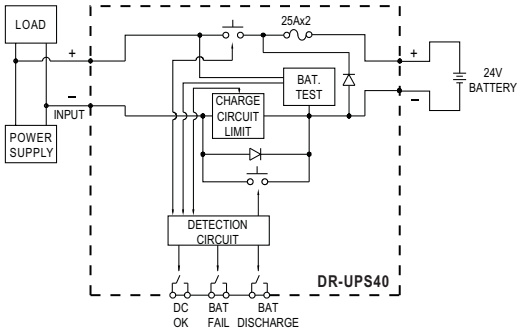

Example of Application

Back up connection for AC interruption

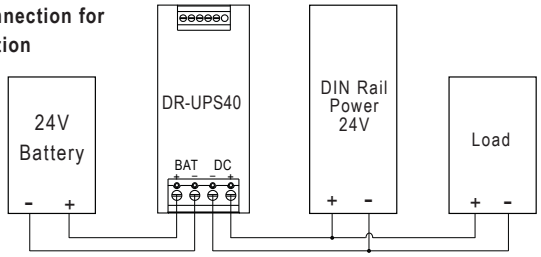

Green Open Frame 5~20W Medical Encapsulated Type

Features

- Universal AC input / Full range
- Medical safety approved (2xMOPP)
- Suitable for BF application with appropriate system consideration
- Protections: Short circuit / Overload / Over voltage
- Low leakage current < 300μA (20W)
- No load power consumption <0.5W (<0.75W for 20W models)
- Fully isolated plastic case
- Isolation class II (5~15W), class I (20W)
- Cooling by free air convection
- Meet industrial, IT safety requirements
- 100% full load burn-in test
- 3 years warranty

PM-05 / 10 / 15 Series

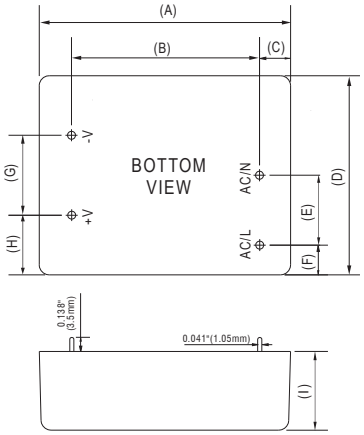

	5W		10W		15W	
A	2.475"	(62.85mm)	2.76"	(70mm)	2.95"	(75mm)
B	1.85"	(47mm)	2.13"	(54mm)	2.441"	(62mm)
C	0.306"	(7.8mm)	0.315"	(8mm)	0.256"	(6.5mm)
D	1.97"	(50mm)	1.97"	(50mm)	2.09"	(53mm)
E	0.689"	(17.5mm)	0.689"	(17.5mm)	0.788"	(20mm)
F	0.295"	(7.5mm)	0.295"	(7.5mm)	0.256"	(6.5mm)
G	0.789"	(20.04mm)	0.789"	(20.04mm)	0.906"	(23.01mm)
H	0.59"	(15mm)	0.59"	(15mm)	0.59"	(15mm)
I	0.776"	(19.7mm)	0.89"	(22.7mm)	0.89"	(22.7mm)

PM-20 Series

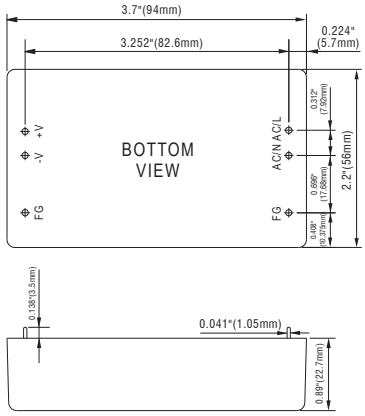

General Specification

AC input voltage range ..... 85~264VAC; 120~370VDC

Frequency range 47-440Hz

AC inrush current (max.) ... Cold start, 25A at 115VAC, 45A at 230VAC
(PM-15: 30A at 115VAC, 50A at 230VAC)
(PM-20: 30A at 115VAC, 65A at 230VAC)

Overload protection ..... >105% hiccup mode, auto recovery

Over voltage protection ..... 115%~135% rated output voltage, shut off, AC recycle to re-start

Setup, rise, hold up time ... PM-5/15: 1000ms, 20ms, 100ms @ 230VAC
PM-10: 1800ms, 20ms, 100ms @ 230VAC
PM-20: 500ms, 20ms, 50ms @ 230VAC

Withstand voltage ..... I/P-O/P: 4kVAC, 1 minute

Working temperature ..... PM-5/10/15: -20~+70°C
PM-20: -20~+60°C

Safety standards ..... ANSI/AAMI ES60601-1, TUV EN60601-1, UL60950-1 (PM-15) approved

EMC standards ..... EN55011, EN55022 class B, EN61000-3-2,3
EN61000-4-2,3,4,5,6,8,11, EN55024,
EN60601-1-2, EN61204-3 Medical level, criteria A

Connection ..... 4 industrial pins (20W: 6 industrial pins)

Packing ..... 0.085kg ; 120pcs / 11.2kg / 0.97CUFT(PM-05)
0.105kg ; 120pcs / 13.6kg / 0.97CUFT(PM-10)
0.14kg ; 120pcs / 17.8kg / 0.97CUFT(PM-15)
0.18kg ; 90pcs / 17.2kg / 0.97CUFT(PM-20)

PM-05 Series

Model No.	Output	Tol.	R&N	Effi.
PM-05-3.3	3.3V, 0~1.25A	±3%	80mV	67%
PM-05-5	5V, 0~1.00A	±2%	80mV	71%
PM-05-12	12V, 0~0.42A	±2%	150mV	73%
PM-05-15	15V, 0~0.33A	±2%	150mV	74%
PM-05-24	24V, 0~0.23A	±2%	240mV	76%

PM-10 Series

Model No.	Output	Tol.	R&N	Effi.
PM-10-3.3	3.3V, 0~2.50A	±3%	150mV	66%
PM-10-5	5V, 0~2.00A	±2%	150mV	74%
PM-10-12	12V, 0~0.85A	±2%	150mV	78%
PM-10-15	15V, 0~0.67A	±2%	150mV	79%
PM-10-24	24V, 0~0.42A	±2%	240mV	79%

PM-15 Series

Model No.	Output	Tol.	R&N	Effi.
PM-15-3.3	3.3V, 0~3.50A	±3%	80mV	73%
PM-15-5	5V, 0~3.00A	±2%	80mV	76%
PM-15-12	12V, 0~1.25A	±2%	150mV	78%
PM-15-15	15V, 0~1.00A	±2%	150mV	79%
PM-15-24	24V, 0~0.63A	±2%	240mV	81%

PM-20 Series

Model No.	Output	Tol.	R&N	Effi.
PM-20-3.3	3.3V, 0~4.50A	±3%	80mV	71%
PM-20-5	5V, 0~4.40A	±2%	80mV	75%
PM-20-12	12V, 0~1.80A	±2%	150mV	81%
PM-20-15	15V, 0~1.40A	±2%	150mV	83%
PM-20-24	24V, 0~0.92A	±2%	240mV	84%

Green Open Frame

5~20W Medical On Board Type

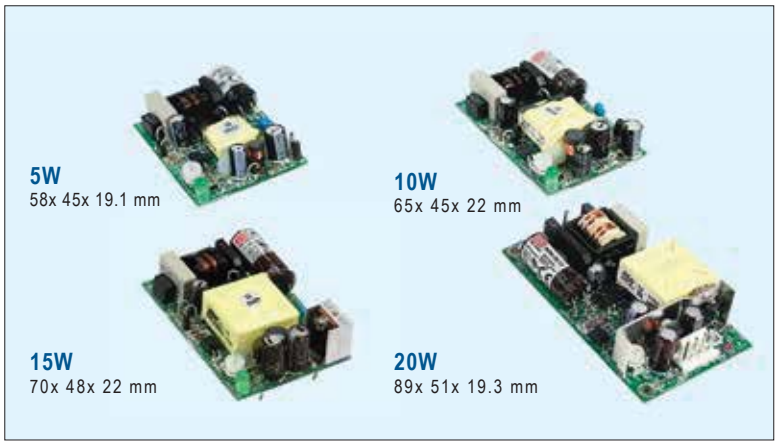

Features

- Universal AC input / Full range
- Medical safety approved (2xMOPP)
- Suitable for BF application with appropriate system consideration
- Protections:
  Short circuit / Overload / Over voltage / Over temperature
- Low leakage current < 300μA (20W)
- No load power consumption <0.5W (<0.75W for 20W models)
- Isolation class II (5~15W)
- On-board type version available for 20W (optional)
- Cooling by free air convection
- Meet industrial, IT safety requirements
- 100% full load burn-in test
- 3 years warranty

NFM-05 / 10 / 15 Series

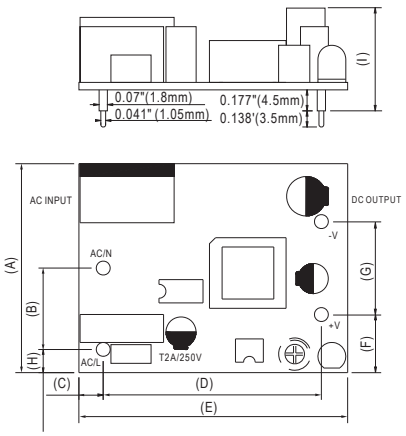

	5W		10W		15W	
A	1.77"	(45mm)	1.77"	(45mm)	1.89"	(48mm)
B	0.689"	(17.5mm)	0.689"	(17.5mm)	0.788"	(20mm)
C	0.21"	(5.33mm)	0.22"	(5.5mm)	0.157"	(4mm)
D	1.85"	(47mm)	2.13"	(54mm)	2.441"	(62mm)
E	2.28"	(57.9mm)	2.56"	(65mm)	2.75"	(69.85mm)
F	0.491"	(12.47mm)	0.491"	(12.47mm)	0.492"	(12.5mm)
G	0.789"	(20.04mm)	0.789"	(20.04mm)	0.906"	(23.01mm)
H	0.196"	(5mm)	0.196"	(5mm)	0.157"	(4mm)
I	0.75"	(19.1mm)	0.87"	(22mm)	0.87"	(22mm)

NFM-20 Series

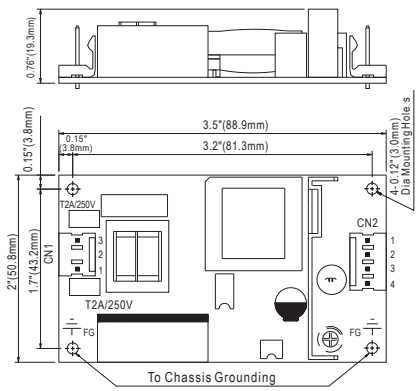

General Specification

AC input voltage range ..... 85~264VAC; 120~370VDC
Frequency range 47-440Hz
AC inrush current (max.) ..... Cold start, 25A at 115VAC, 45A at 230VAC
(NFM-15: 30A at 115VAC, 50A at 230VAC)
(NFM-20: 30A at 115VAC, 65A at 230VAC)
DC adjustment range ..... ±10% rated output voltage
Overload protection ..... >105% hiccup mode, auto recovery
Over voltage protection ..... 115%~135% rated output voltage, shut off, AC recycle to re-start
Over temp. protection ..... Shutdown o/p voltage, recovers automatically after temperature goes down
Setup, rise, hold up time ..... NFM-5/15: 1000ms, 20ms, 100ms @ 230VAC
NFM-10: 1800ms, 20ms, 100ms @ 230VAC
NFM-20: 500ms, 20ms, 50ms @ 230VAC
Withstand voltage ..... I/P-O/P: 4kVAC, 1 minute
Working temperature ..... NFM-5/10/15: -20~+70°C
NFM-20: -20~+60°C
Safety standards ..... ANSI/AAMI ES60601-1, TUV EN60601-1, UL60950-1 (NFM-15) approved
EMC standards ..... EN55011, EN55022 class B, EN61000-3-2,3 EN61000-4-2,3,4,5,6,8,11, EN55024, EN60601-1-2, EN61204-3 Medical level, criteria A
Connection ..... 4 industrial pins for 5~15W
3P/4P/3.96mm pitch, Molex 41791-03/04 for 20W
Packing ..... 0.03kg ; 120pcs / 4.6kg / 0.97CUFT(NFM-05)
0.045kg ; 120pcs / 6.4kg / 0.97CUFT(NFM-10)
0.065kg ; 120pcs / 8.8kg / 0.97CUFT(NFM-15)
0.09kg ; 105pcs / 10.5kg / 0.97CUFT(NFM-20)

5W — NFM-05

Model No.	Output	Tol.	R&N	Effi.
NFM-05-3.3	3.3V, 0~1.25A	±2%	80mV	67%
NFM-05-5	5V, 0~1.00A	±2%	80mV	71%
NFM-05-12	12V, 0~0.42A	±1%	150mV	73%
NFM-05-15	15V, 0~0.33A	±1%	150mV	74%
NFM-05-24	24V, 0~0.23A	±1%	240mV	76%

10W — NFM-10

Model No.	Output	Tol.	R&N	Effi.
NFM-10-3.3	3.3V, 0~2.50A	±2%	150mV	66%
NFM-10-5	5V, 0~2.00A	±2%	150mV	74%
NFM-10-12	12V, 0~0.85A	±1%	150mV	78%
NFM-10-15	15V, 0~0.67A	±1%	150mV	79%
NFM-10-24	24V, 0~0.42A	±1%	240mV	79%

15W — NFM-15

Model No.	Output	Tol.	R&N	Effi.
NFM-15-3.3	3.3V, 0~3.50A	±2%	80mV	73%
NFM-15-5	5V, 0~3.00A	±2%	80mV	76%
NFM-15-12	12V, 0~1.25A	±1%	150mV	78%
NFM-15-15	15V, 0~1.00A	±1%	150mV	79%
NFM-15-24	24V, 0~0.63A	±1%	240mV	81%

20W — NFM-20

Model No.	Output	Tol.	R&N	Effi.
NFM-20-3.3	3.3V, 0~4.50A	±2%	80mV	71%
NFM-20-5	5V, 0~4.40A	±2%	80mV	75%
NFM-20-12	12V, 0~1.80A	±1%	150mV	81%
NFM-20-15	15V, 0~1.40A	±1%	150mV	83%
NFM-20-24	24V, 0~0.92A	±1%	240mV	84%

Green Open Frame 30~200W 1~3 Output Medical Type

NEW

RPS-30/45/65 (3"x2")

RPS/D/T-60 (4"x2")

Under Development

RPS-120 (4"x2")

Under Development

RPS-200 (4"x2")

Under Development

RPS-120/200-x(-C)

Features

- Universal AC input / Full range
- Built-in active PFC function (RPS-200)
- Class I or Class II installations
- Medical safety approved (2x MOPP)
- Suitable for BF application with appropriate system consideration
- Low leakage current <100μA (<150μA for RPS/D/T-60, 190μA for RPS-200)
- No load power consumption <0.1W (<0.3W for 120W, <0.5W for 200W, <0.75W for 60W)
- High efficiency up to 94%
- Protections: Short circuit / Overload / Over voltage / Over temp. (RPS-120/200)
- Built-in 12V/0.5A auxiliary output (RPS-120/200)
- LED indicator for power on (except for RPS/D/T-60)
- 3 years warranty

(RPS-200)

General Specification (Please refer to www.meanwell.com for detail spec.)

Model No.		RPS-30	RPS-45	RPS-65	RPS/D/T-60	RPS-120-x(-C)	RPS-200-x(-C)
Rated Power	Fan	NA				120W (20.5CFM)	200W (20.5CFM)
	Convection	30W	45W	65W	60W	90W	140W
AC input voltage range		80~264VAC			90~264VAC	80~264VAC	
DC adjustment range		±10% rated output voltage			-5%~+10%	±5% rated output voltage	
Overload protection		115%~150% hiccup mode, auto-recovery					
Over voltage protection		115%~135% shut down o/p voltage, re-power on to recover				110%~130%	
Withstand voltage		I/P-O/P: 4kVAC, I/P-FG:2kVAC, O/P-FG: 1.5kVAC					
Working temperature		-30~+70°C			-20~+70°C(RPS), -20~+65°C(RPD/T)	-30~+70°C	
Safety standards		ANSI/AAMI ES60601-1, TUV EN60601-1 approved (RPS-30/45/65/120/200 pending); UL/EN60950-1 for RPS/D/T-60 only					
EMC standards		EN55022 (RPS/D/T-60), EN55011 class B, EN61000-3-2,-3, EN61000-4,2,3,4,5,6,8,11, EN60601-1-1-2 (RPS-30/45/65/120/200 pending)					
Connection		JST B3P / B2P-VH	JST B3P / B4P-VH		JST B3P / B4P-VH (RPS-60) JST B3P / B6P-VH (RPD/T-60)	JST B3P / B4P-VH	JST B3P / B6P-VH
Dimension (LxWxH)(mm)		76.2x 50.8x 24			101.6x 50.8x 29	PCB: 101.6x 50.8x 29 ; Case: 103.4x 62x 40	

30W—Class II — NEW RPS-30

Model No.	Output (Rated / Peak 10 sec.)	Tol.	R&N	Effi.
RPS-30-3.3	3.3V, 0~6A / 6.6A	±2%	80mV	80.0%
RPS-30-5	5V, 0~6A / 6.6A	±2%	80mV	82.0%
RPS-30-7.5	7.5V, 0~4A / 4.4A	±2%	80mV	84.0%
RPS-30-12	12V, 0~2.5A / 2.75A	±2%	120mV	88.0%
RPS-30-15	15V, 0~2A / 2.2A	±2%	150mV	89.0%
RPS-30-24	24V, 0~1.25A / 1.375A	±1%	240mV	89.5%
RPS-30-48	48V, 0~0.625A / 0.687A	±1%	300mV	91.0%

45W—Class II — NEW RPS-45

Model No.	Output (Rated / Peak 10 sec.)	Tol.	R&N	Effi.
RPS-45-3.3	3.3V, 0~8A / 8.8A	±2%	80mV	80.0%
RPS-45-5	5V, 0~8A / 8.8A	±2%	80mV	83.0%
RPS-45-7.5	7.5V, 0~5.4A / 5.95A	±2%	80mV	85.0%
RPS-45-12	12V, 0~3.8A / 4.18A	±2%	120mV	88.0%
RPS-45-15	15V, 0~3A / 3.3A	±2%	150mV	89.0%
RPS-45-24	24V, 0~1.9A / 2.1A	±1%	240mV	90.0%
RPS-45-48	48V, 0~0.94A / 1.03A	±1%	300mV	91.0%

65W—Class II — NEW RPS-65

Model No.	Output (Rated / Peak 10 sec.)	Tol.	R&N	Effi.
RPS-65-3.3	3.3V, 0~11A / 12.12A	±2%	80mV	80.0%
RPS-65-5	5V, 0~10A / 11A	±2%	80mV	84.0%
RPS-65-7.5	7.5V, 0~8A / 8.8A	±2%	80mV	85.0%
RPS-65-12	12V, 0~5.42A / 5.96A	±2%	120mV	88.0%
RPS-65-15	15V, 0~4.34A / 4.77A	±1%	150mV	89.0%
RPS-65-24	24V, 0~2.71A / 2.98A	±1%	240mV	90.0%
RPS-65-48	48V, 0~1.36A / 1.49A	±1%	300mV	91.0%

60W:Single Output—Class I — RPS-60

Model No.	Output	Tol.	R&N	Effi.
RPS-60-3.3	3.3V, 0~11A	±2%	80mV	74.0%
RPS-60-5	5V, 0~11A	±2%	80mV	79.0%
RPS-60-12	12V, 0~5.5A	±2%	120mV	83.0%
RPS-60-15	15V, 0~4.4A	±2%	150mV	84.0%
RPS-60-24	24V, 0~2.75A	±1%	240mV	85.0%
RPS-60-48	48V, 0~1.375A	±1%	300mV	86.0%

60W:Dual Output—Class I — RPD-60

Model No.	Output	Tol.	R&N	Effi.	Max.
RPD-60A	5V, 0.5~5.5A 12V, 0.1~2.2A	+3%,-2% ±6%	80mV 80mV	78%	54W
RPD-60B	5V, 0.5~3.85A 24V, 0.1~1.65A	+3%,-2% +8%,-4%	80mV 100mV	82%	59W

60W:Triple Output—Class I — RPT-60

Model No.	Output	Tol.	R&N	Effi.	Max.
RPT-60A	5V, 0.5~4.4A 12V, 0.1~2.2A	+3%,-2% ±6%	80mV 80mV	77%	51W
RPT-60B	-5V, 0.1~0.55A 5V, 0.5~4.4A 12V, 0.1~2.2A	+9%,-8% +3%,-2% ±6%	80mV 80mV 80mV	78%	55W
RPT-60C	-12V, 0.1~0.55A 5V, 0.5~4.4A 15V, 0.1~0.65A	+10%,-6% +3%,-2% ±6%	100mV 80mV 100mV	79%	55W
RPT-60D	-15V, 0.1~0.55A 5V, 0.5~3.85A 24V, 0.1~1.1A	±8% +3%,-2% ±6%	150mV 80mV 150mV	79%	52W
RPT-6003	12V, 0.1~0.55A 3.3V, 0.5~5.5A 5V, 0.3~3.3A 12V, 0.1~0.77A	±8% +3%,-2% ±8% +10%,-6%	80mV 80mV 80mV 80mV	75%	44W

120W—Class I or II — Under Development RPS-120

Model No.	Output	Tol.	R&N	Effi.
RPS-120-12☐	12V, 0~10A	±2%	120mV	88.0%
RPS-120-15☐	15V, 0~8A	±2%	120mV	88.5%
RPS-120-24☐	24V, 0~5A	±1%	150mV	90.0%
RPS-120-27☐	27V, 0~4.5A	±1%	150mV	90.0%
RPS-120-48☐	48V, 0~2.5A	±1%	200mV	91.0%

☐= blank, -C ; blank: PCB type(standard), -C: Enclosed type(optional)

200W—Class I or II — Under Development RPS-200

Model No.	Output	Tol.	R&N	Effi.
RPS-200-12☐	12V, 0~16.7A	±2%	100mV	92.0%
RPS-200-15☐	15V, 0~13.4A	±2%	100mV	92.0%
RPS-200-24☐	24V, 0~8.4A	±1%	150mV	93.0%
RPS-200-27☐	27V, 0~7.5A	±1%	150mV	93.0%
RPS-200-48☐	48V, 0~4.2A	±1%	200mV	94.0%

☐= blank, -C ; blank: PCB type(standard), -C: Enclosed type(optional)

Green Open Frame 75~400W 1~3 Output Medical Type

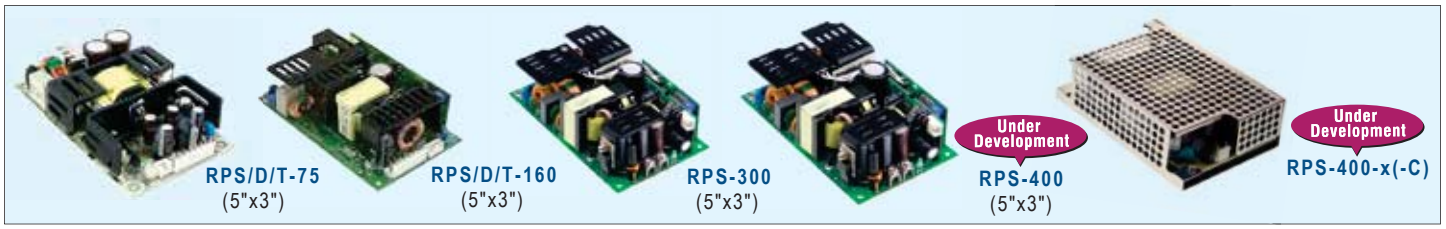

Features

- Universal AC input / Full range
- Medical safety approved (2xMOPP)
- Suitable for BF application with appropriate system consideration (except for RPS/D/T-75)
- Built-in active PFC function (except for RPS/D/T-75)
- Protections: Short circuit / Overload / Over voltage / Over temperature (except for RPS/D/T-75)
- Low leakage current <150μA (<200μA for 160W, 300μA for 300/400W)
- With power good and fail signal output (RPS/D/T-160, RPS-300/400)
- Built-in remote sense function (RPS-160 5~15V, RPS-300/400)
- No load power consumption <0.5W (<0.75W for RPS-75&RPS/D/T-160 G model)
- Built-in 12V/0.5A auxiliary output (RPS-300/400)
- Standby 5V@0.8A (RPS/D/T-160 G model); 5V@1A (RPS-300/400)
- LED indicator for power on
- 3 years warranty

General Specification (Please refer to www.meanwell.com for detail spec.)

(except for RPS/D/T-75)

Model No.		RPS/D/T-75	RPS☐-160	RPD☐-160	RPT☐-160	RPS-300	RPS-400-x(-C)
Rated Power	Fan	100W (23.5CFM)	160W (20.5CFM)	150W (20.5CFM)		300W (20.5CFM)	400W (25CFM)
	Convection	75W	110W	100W		200W	250W
AC input voltage range		90~264VAC					80~264VAC
DC adjustment range		CH1: -5%~+10% rated output voltage	±10%	0~+10%		±5%	
Overload protection		140%~180% hiccup mode, auto-recovery	105%~135% hiccup mode, auto-recovery				
Over voltage protection		CH1: 110%~135% shut down o/p voltage, re-power on to recover					
Withstand voltage		I/P-O/P: 4kVAC, I/P-FG:2kVAC, O/P-FG: 1.5kVAC					
Working temperature		-20~+70°C (refer to output derating curve)				-30~+70°C	
Safety standards		ANSI/AAMI ES60601-1, TUV EN60601-1 approved (RPS-300/400 pending)					
EMC standards		EN55022(except for 400W), EN55011 class B(Radiation class A for RPS-300/400), EN61000-3-2,-3; EN60601-1-2					
Connection		JST B3P / B8P-VH				JST B5P / screw terminal	
Dimension (LxWxH)(mm)		127x 76.2x 31	127x 76.2x 34.6			127x 76.2x 35	PCB: 127x 76.5x35 Case: 130x 85x 40

75W:Single Output—Class I — RPS-75

Model No.	Output	Tol.	R&N	Effi.
RPS-75-3.3	3.3V, 0~20A	±2%	80mV	73%
RPS-75-5	5V, 0~18.7A	±2%	80mV	78%
RPS-75-12	12V, 0~8.3A	±1%	120mV	82%
RPS-75-15	15V, 0~6.7A	±1%	150mV	83%
RPS-75-24	24V, 0~4.2A	±1%	240mV	85%
RPS-75-36	36V, 0~2.8A	±1%	300mV	86%
RPS-75-48	48V, 0~2.1A	±1%	300mV	86%

75W:Dual Output—Class I — RPD-75

Model No.	Output	Tol.	R&N	Effi.	Max.
RPD-75A	5V, 1.0~9.5A	±2%	80mV	77%	96W
	12V, 0.3~4.0A	±6%	120mV		
RPD-75B	5V, 1.0~6.8A	±2%	80mV	79%	99W
	24V, 0.2~2.7A	±6%	200mV		

75W:Triple Output—Class I — RPT-75

Model No.	Output	Tol.	R&N	Effi.	Max.
RPT-75A	5V, 0.6~8.0A	±2%	80mV	76%	93W
	12V, 0.2~4.0A	±6%	120mV		
RPT-75B	-5V, 0.1~1.0A	±5%	120mV	77%	100W
	5V, 0.6~8.0A	±2%	80mV		
	12V, 0.2~4.0A	±6%	120mV		
RPT-75C	-12V, 0.1~1.0A	±5%	120mV	77%	100W
	5V, 0.6~8.0A	±2%	80mV		
	15V, 0.1~3.0A	±8%	150mV		
RPT-75D	-15V, 0.1~1.0A	±5%	150mV	79%	95W
	5V, 0.6~7.0A	±2%	80mV		
	24V, 0.1~2.0A	±8%	200mV		
RPT-7503	12V, 0.1~1.0A	±8%	120mV	74%	81W
	3.3V, 0.7~7.0A	±4%	80mV		
	5V, 0.0~8.0A	±6%	120mV		
	12V, 0.0~1.5A	+10%,-6%	120mV		

160W:Single Output—Class I — RPS-160

Model No.	Output	Tol.	R&N	Effi.
RPS☐-160-5	5V, 0~30.0A	±4%	100mV	85%
RPS☐-160-12	12V, 0~12.9A	±3%	100mV	87%
RPS☐-160-15	15V, 0~10.3A	±3%	120mV	87%
RPS☐-160-24	24V, 0~6.5A	±2%	150mV	87%
RPS☐-160-48	48V, 0~3.25A	±2%	250mV	88%

160W:Dual Output—Class I — RPD-160

Model No.	Output	Tol.	R&N	Effi.	Max.
RPD☐-160B	5V, 1.0~12A	±2.5%	80mV	84%	150W
	24V, 0.2~3.6A	±6%	200mV		

160W:Triple Output—Class I — RPT-160

Model No.	Output	Tol.	R&N	Effi.	Max.
RPT☐-160A	5V, 0.6~14A	±2%	100mV	84%	145W
	12V, 0.2~5.5A	±5%	120mV		
RPT☐-160B	-5V, 0.1~1.0A	-5%,+7%	120mV	84%	146W
	5V, 0.6~14A	±2%	100mV		
	12V, 0.2~5.0A	±5%	120mV		
RPT☐-160C	-12V, 0.1~1.0A	-4%,+5%	120mV	83%	143W
	5V, 0.6~14A	±2%	100mV		
	15V, 0.1~3.6A	±4%	150mV		
RPT☐-160D	-15V, 0.1~1.0A	±8%	150mV	83%	148W
	5V, 0.3~11A	±2%	100mV		
	12V, 0.2~5.0A	±5%	120mV		
	24V, 0.15~1.2A	-5%,+7%	200mV		

☐= blank, G; blank: basic function,
G: with 5Vsb/0.8A & no load power consumption< 0.75W

300W—Class I — RPS-300

Model No.	Output	Tol.	R&N	Effi.
RPS-300-12	12V, 0~25A	±3%	120mV	90.0%
RPS-300-15	15V, 0~20A	±3%	120mV	90.0%
RPS-300-24	24V, 0~12.5A	±2%	150mV	92.5%
RPS-300-27	27V, 0~11.12A	±2%	200mV	93.0%
RPS-300-48	48V, 0~6.25A	±2%	250mV	93.0%

400W—Class I — Under Development RPS-400

Model No.	Output	Tol.	R&N	Effi.
RPS-400-12☐	12V, 0~33.3A	±3%	120mV	92.0%
RPS-400-15☐	15V, 0~26.7A	±3%	150mV	92.0%
RPS-400-24☐	24V, 0~16.7A	±2%	200mV	93.0%
RPS-400-27☐	27V, 0~14.9A	±1%	200mV	93.0%
RPS-400-48☐	48V, 0~8.4A	±1%	250mV	94.0%

☐ = blank, -C; blank: PCB type(standard), -C: Enclosed type(optional)

Open Frame

30~65W 1~3 Output Medical Type

MPS-30
(4"x2")

MPS/D/T-45
(5"x3")

MPS/D/T-65
(5"x3")

Features

- Universal AC input / Full range
- Medical safety approved (2x MOPP)
- Protections: Short circuit / Overload / Over voltage / Over temperature (MPS-30)
- Low leakage current <250μA (<200μA for MPS-30)
- Cooling by free air convection
- 3 years warranty

General Specification (Please refer to www.meanwell.com for detail spec.)

Model No.	MPS-30	MPS/D/T-45	MPS/D/T-65
AC input voltage range	88~264VAC; 120~370VDC	90~264VAC; 127~370VDC	
DC adjustment range	NA	CH1: ±10% rated output voltage	
Overload protection	>105% rated output power	53~75W rated output power	73~105W rated output power
Over voltage protection	110%~135%	CH1: 115%~135% hiccup mode, auto-recovery	
Withstand voltage	I/P-O/P: 4kVAC, I/P-FG:2kVAC, 1 minute		
Working temperature	-10~+60°C (refer to output dersting curve)		
Safety standards	ANSI/AAMI ES60601-1, TUV EN60601-1 approved		
EMC standards	EN55011 class B, EN61000-3-2,-3, EN61000-4-2,3,4,5,6,8,11, EN60601-1-2		
Connection	5+4P/3.96mm pitch, Molex P/N:41791-05,04	2P+6P/3.96mm pitch, Molex P/N:5277-02, 5273-06	
Dimension (LxWxH)(mm)	101.6x 65.8x 23.5	127x 76x 28	127x 76x 42

30W:Single Output—Class I — MPS-30

Model No.	Output	Tol.	R&N	Effi.
MPS-30-5	5V, 0~5.0A	±3%	80mV	72%
MPS-30-12	12V, 0~2.5A	±3%	120mV	75%
MPS-30-15	15V, 0~2.0A	±3%	150mV	76%
MPS-30-24	24V, 0~1.2A	±3%	240mV	77%
MPS-30-27	27V, 0~1.1A	±3%	240mV	78%
MPS-30-48	48V, 0~0.6A	±2%	240mV	78%

45W:Single Output—Class I — MPS-45

Model No.	Output	Tol.	R&N	Effi.
MPS-45-3.3	3.3V, 0~8.0A	±3%	80mV	65%
MPS-45-5	5V, 0~8.0A	±3%	100mV	72%
MPS-45-7.5	7.5V, 0~5.4A	±3%	100mV	75%
MPS-45-12	12V, 0~3.7A	±2%	100mV	76%
MPS-45-13.5	13.5V, 0~3.3A	±2%	100mV	76%
MPS-45-15	15V, 0~3.0A	±2%	100mV	77%
MPS-45-24	24V, 0~1.9A	±2%	100mV	78%
MPS-45-27	27V, 0~1.7A	±2%	100mV	78%
MPS-45-48	48V, 0~1.0A	±2%	100mV	78%

45W:Dual Output—Class I — MPD-45

Model No.	Output	Tol.	R&N	Effi.	Max.
MPD-45A	5V, 0.4~5.0A	±4%	60mV	76%	40W
	12V, 0.2~2.5A	±7%	120mV		
MPD-45B	5V, 0.4~5.0A	±4%	60mV	78%	45W
	24V, 0.2~1.8A	±7%	150mV		

45W:Triple Output—Class I — MPT-45

Model No.	Output	Tol.	R&N	Effi.	Max.
MPT-45A	5V, 0.4~5.0A	±4%	60mV	73%	41W
	12V, 0.2~2.5A	±7%	120mV		
	-5V, 0.0~0.5A	±5%	60mV		
MPT-45B	5V, 0.4~5.0A	±4%	60mV	75%	43W
	12V, 0.2~2.5A	±7%	120mV		
	-12V, 0.0~0.5A	±5%	100mV		
MPT-45C	5V, 0.4~5.0A	±4%	60mV	75%	44W
	15V, 0.2~2.3A	±7%	120mV		
	-15V, 0.0~0.5A	±5%	100mV		

65W:Single Output—Class I — MPS-65

Model No.	Output	Tol.	R&N	Effi.
MPS-65-3.3	3.3V, 0~12A	±3%	80mV	66%
MPS-65-5	5V, 0~12A	±3%	100mV	74%
MPS-65-7.5	7.5V, 0~8.0A	±3%	100mV	76%
MPS-65-12	12V, 0~5.2A	±2%	100mV	77%
MPS-65-13.5	13.5V, 0~4.7A	±2%	100mV	78%
MPS-65-15	15V, 0~4.2A	±2%	100mV	79%
MPS-65-24	24V, 0~2.7A	±2%	100mV	80%
MPS-65-27	27V, 0~2.4A	±2%	100mV	80%
MPS-65-48	48V, 0~1.35A	±2%	100mV	80%

65W:Dual Output—Class I — MPD-65

Model No.	Output	Tol.	R&N	Effi.	Max.
MPD-65A	5V, 0.4~7.0A	±4%	60mV	75%	61W
	12V, 0.2~3.2A	±7%	150mV		
MPD-65B	5V, 0.4~6.0A	±4%	60mV	78%	66W
	24V, 0.2~2.6A	±7%	150mV		

65W:Triple Output—Class I — MPT-65

Model No.	Output	Tol.	R&N	Effi.	Max.
MPT-65A	5V, 0.4~7.0A	±4%	60mV	74%	60W
	12V, 0.2~3.2A	+10%,-7%	120mV		
	-5V, 0.0~0.7A	±5%	60mV		
MPT-65B	5V, 0.4~7.0A	±4%	60mV	74%	64W
	12V, 0.2~3.2A	+10%,-7%	160mV		
	-12V, 0.0~0.7A	±5%	100mV		
MPT-65C	5V, 0.4~7.0A	±4%	60mV	74%	65W
	15V, 0.2~2.6A	+10%,-7%	180mV		
	-15V, 0.0~0.7A	±5%	100mV		

Open Frame

200W 1~4 Output Medical Type

MPS/D/T/Q-200
(7"x4.2")

Features

- Universal AC input / Full range
- Built-in active PFC function
- Medical safety approved (2xMOPP)
- Suitable for BF application with appropriate system consideration
- Low leakage current <180μA
- Protections: Short circuit / Overload / Over voltage / Over temperature
- Built-in remote sense function and remote ON/OFF control
- Free air convection for 140W, 200W with 25CFM forced air
- With P.G and P.F singal output
- 3 years warranty

General Specification (Please refer to www.meanwell.com for detail spec.)

Model No.		MPS/D/T/Q-200
AC input voltage range		90~264VAC
AC inrush current (max.)		Cold start, 60A at 230VAC
DC adjustment range		CH1: -5~+10% rated output voltage
Overload protection	Range	120%~160% rated output power
	Type	Hiccup mode, auto-recovery
Over voltage protection	Range	CH1: 115%~135% rated output voltage
	Type	Shut down o/p voltage
Withstand voltage		I/P-O/P: 4kVAC, I/P-FG:1.5kVAC, O/P-FG: 1.5kVAC
Working temperature		-20~+70°C (refer to output derating curve)
Safety standards		ANSI/AAMI ES60601-1, TUV EN60601-1, IEC60601-1 approved; Design refer to UL60950-1, TUV EN60950-1
EMC standards		EN55011/EN55022 class B, EN61000-3-2,3, EN61000-4-2,3,4,5,6,8,11, EN60601-1-2, EN61000-6-2
Connection		3P, 20P / 3.96mm pitch, JST B3P/VH, Molex 5566-20; 3P, 8Px2 / 3.96mm pitch. JSTB3P / B8Px2-VH
Dimension (LxWxH)(mm)		177.8x 107.2x 35.5

200W:Single Output—Class I — MPS-200

Model No.	Output	Tol.	R&N	Effi.
MPS-200-3.3	3.3V, 0~40A	±2%	80mV	77%
MPS-200-5	5V, 0~40A	±2%	80mV	81%
MPS-200-12	12V, 0~16.7A	±2%	100mV	84%
MPS-200-15	15V, 0~13.4A	±2%	100mV	85%
MPS-200-24	24V, 0~8.4A	±1%	150mV	86%
MPS-200-48	48V, 0~4.2A	±1%	200mV	87%

200W:Dual Output—Class I — MPD-200

Model No.	Output	Tol.	R&N	Effi.	Max.
MPD-200A	5V, 4.0~24A	±2%	80mV	82%	196W
	12V, 0.8~9.6A	+8%,-5%	120mV		
MPD-200B	5V, 4.0~24A	±2%	80mV	83%	196W
	24V, 0.4~4.8A	±6.5%	180mV		

200W:Triple Output—Class I — MPT-200

Model No.	Output	Tol.	R&N	Effi.	Max.
MPT-200A	5V, 4.0~24A	±2%	80mV	80%	200W
	12V, 0.8~9.0A	±8%	120mV		
	-5V, 0.0~2.4A	±5%	80mV		
MPT-200B	5V, 4.0~24A	±2%	80mV	80%	196W
	12V, 0.6~7.2A	±8%	120mV		
	-12V, 0.0~2.4A	±5%	80mV		
MPT-200C	5V, 4.0~24A	±2%	80mV	80%	201W
	15V, 0.5~5.6A	±8%	150mV		
	-15V, 0.0~2.4A	±5%	80mV		
MPT-200D	5V, 4.0~24A	±2%	80mV	81%	196W
	24V, 0.3~3.6A	±8%	180mV		
	12V, 0.0~2.4A	±5%	80mV		

200W:Quad Output—Class I — MPQ-200

Model No.	Output	Tol.	R&N	Effi.	Max.
MPQ-200B	5V, 3.0~18A	±2%	80mV	78%	193W
	12V, 0.7~8.4A	±8%	120mV		
	-5V, 0.0~2.4A	±5%	80mV		
	-12V, 0.0~2.4A	±5%	80mV		
MPQ-200C	5V, 3.0~18A	±2%	80mV	78%	190W
	15V, 0.5~6.0A	±6%	150mV		
	-5V, 0.0~2.4A	±5%	80mV		
	-15V, 0.0~2.4A	±5%	80mV		
MPQ-200D	5V, 3.0~18A	±2%	80mV	79%	195W
	24V, 0.3~3.6A	±8%	180mV		
	12V, 0.0~2.4A	±5%	80mV		
	-12V, 0.0~2.4A	±5%	80mV		
MPQ-200F	5V, 3.0~18A	±2%	80mV	81%	200W
	24V, 0.3~3.3A	±8%	180mV		
	15V, 0.0~2.4A	±5%	80mV		
	-15V, 0.0~2.4A	±5%	80mV		

Open Frame

5~35W Single and Dual Output

5W & 15W & 35W Single Output

- Universal AC input / Full range
- Protections: Short circuit / Overload / Over voltage / Over temperature(PS-05/15)
- Cooling by free air convection
- Low leakage current <0.5mA(PS-05/15)
- 100% full load burn-in test
- Low cost, high reliability
- 2 years warranty

PS-05
75x 40x 20 mm

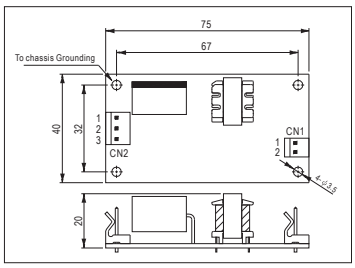

PS-15
94x 49x 25 mm

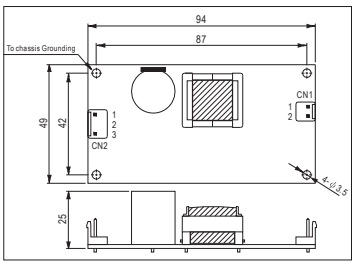

PS-35
101.6x 50.8x 24 mm

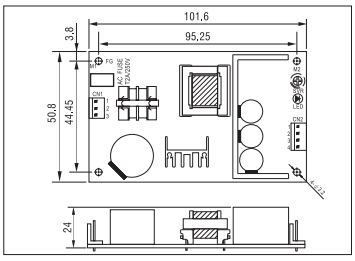

AC input voltage range ..... 85~264VAC; 120~370VDC(PS-05/15)
90~264VAC; 127~370VDC(PS-35)
AC inrush current ..... Cold start, 30A at 230VAC(PS-05),
40A at 230VAC(PS-15), 45A at 230VAC(PS-35)
Overload protection ..... 105%~160% hiccup mode, auto-recovery
Over voltage protection ..... 115%~150% rated output voltage
Over temp. protection ..... Hiccup mode, auto-recovery(PS-05/15)
Withstand voltage ..... I/P-O/P: 3kVAC, I/P-FG:1.5kVAC, 1minute
Working temperature ..... -10~+60°C (PS-05/15); -20~+65°C (PS-35)
Safety standards ..... IEC60950-1 CB approved(PS-05/15)
UL60950-1, TUV EN60950-1 approved(PS-35)
EMC standards ..... EN55022 class B, EN61000-3-2,3,
EN61000-4-2,3,4,5,6,8,11
Connection ..... PS-05: 3P/ 5mm, 2P/ 3.96mm pitch, Molex 5285-03,5273-02
PS-15: 3+2P/3.96mm pitch, JST B3P/B2P-VH
PS-35: 3+4P/3.96mm pitch, JST B3P/B4P-VH-B

❖ 5W

Model No.	Output	Tol.	R&N	Effi.
PS-05-5	5V, 0~1.0A	±2%	100mV	70%
PS-05-12	12V, 0~0.45A	±2%	120mV	75%
PS-05-15	15V, 0~0.35A	±2%	120mV	75%
PS-05-24	24V, 0~0.22A	±2%	200mV	76%
PS-05-48	48V, 0~0.11A	±1%	200mV	76%

❖ 10W

Model No.	Output	Tol.	R&N	Effi.
PS-15-5	5V, 0~2.80A	±2%	100mV	74%
PS-15-12	12V, 0~1.25A	±2%	120mV	77%
PS-15-15	15V, 0~1.00A	±2%	120mV	78%
PS-15-24	24V, 0~0.625A	±2%	150mV	79%
PS-15-48	48V, 0~0.313A	±2%	200mV	77%

❖ 35W

Model No.	Output	Tol.	R&N	Effi.
PS-35-3.3	3.3V, 0~6.0A	±2%	80mV	70%
PS-35-5	5V, 0~6.0A	±2%	100mV	78%
PS-35-7.5	7.5V, 0~4.7A	±2%	100mV	80%
PS-35-12	12V, 0~3.0A	±1%	120mV	81%
PS-35-13.5	13.5V, 0~2.6A	±1%	120mV	81%
PS-35-15	15V, 0~2.4A	±1%	150mV	81%
PS-35-24	24V, 0~1.5A	±1%	200mV	85%
PS-35-48	48V, 0~0.75A	±1%	240mV	84%

25W 1~2 Output

- Universal AC input / Full range
- Protections: Short circuit / Overload / Over voltage / Over temp.
- Cooling by free air convection
- Low leakage current <0.5mA
- 100% full load burn-in test
- Low cost, high reliability
- 2 years warranty

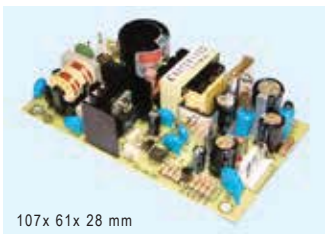

107x 61x 28 mm

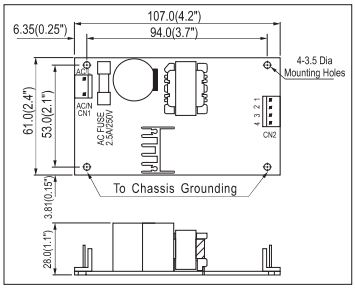

AC input voltage range ..... 85~264VAC; 120~370VDC
AC inrush current ..... Cold start, 36A at 230VAC
Overload protection ..... >105% hiccup mode, auto-recovery
Over voltage protection ..... 115%~135% rated output voltage
Over temp. protection ..... Shut down o/p voltage, re-power on to recover
Leakage current ..... Less than 0.5mA at 240VAC
Withstand voltage ..... I/P-O/P: 3kVAC, I/P-FG:2kVAC, 1minute
Working temperature ..... -10~+60°C (refer to output derating curve)
Safety standards ..... UL60950-1, TUV EN60950-1 approved
EMC standards ..... EN55022 class B, EN61000-3-2,3,
EN61000-4-2,3,4,5
Connection ..... 3P, 4P/ 3.96mm pitch, Molex P/N: 41791-03, 04
Packing ..... 0.14kg ; 96pcs / 15.0kg / 1.30CUFT(PS-25)
0.15kg ; 96pcs / 15.9kg / 1.30CUFT(PD-25)
0.13kg ; 96pcs / 15.4kg / 1.30CUFT(PD-2503)

❖ Single Output

Model No.	Output	Tol.	R&N	Effi.
PS-25-3.3	3.3V, 0~5.0A	±3%	80mV	66%
PS-25-5	5V, 0~5.0A	±2%	80mV	74%
PS-25-7.5	7.5V, 0~3.3A	±2%	80mV	76%
PS-25-12	12V, 0~2.1A	±2%	100mV	78%
PS-25-13.5	13.5V, 0~1.9A	±2%	100mV	78%
PS-25-15	15V, 0~1.7A	±2%	100mV	78%
PS-25-24	24V, 0~1.0A	±2%	240mV	79%
PS-25-27	27V, 0~0.9A	±2%	240mV	79%
PS-25-48	48V, 0~0.5A	±2%	350mV	79%

❖ Dual Output

Model No.	Output	Tol.	R&N	Effi.	Max.
PD-25A	5V, 0.2~2.5A	±2%	50mV	71%	25W
	12V, 0.1~1.5A	±6%	150mV		
PD-25B	5V, 0.2~2.0A	±2%	50mV	77%	25W
	24V, 0.1~1.0A	±6%	200mV		
PD-2505	5V, 0.1~3.0A	±6%	50mV	73%	25W
	-5V, 0.1~2.5A	±6%	50mV		
PD-2512	12V, 0.1~1.2A	±4%	50mV	74%	24W
	-12V, 0.1~1.2A	±4%	50mV		
PD-2515	15V, 0.1~1.0A	±4%	50mV	75%	24W
	-15V, 0.1~1.0A	±4%	50mV		
PD-2503	3.3V, 0.2~5.0A	±2%	50mV	72%	25W
	5V, 0.1~4.0A	+5%,-8%	50mV		

Open Frame 45~65W Single, Dual, and Triple Output

45W 1~3 Output

- Universal AC input / Full range
- Protections: Short circuit / Overload / Over voltage
- Cooling by free air convection
- Fixed switching frequency at 65kHz
- Low leakage current <0.75mA
- 100% full load burn-in test
- Low cost, high reliability
- 2 years warranty

127x 76x 28 mm

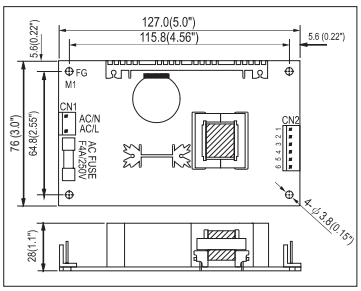

AC input voltage range ...90~264VAC; 127~370VDC
AC inrush current .....Cold start, 15A at 115VAC, 30A at 230VAC
DC adjustment range .....CH1: -5%~+10% rated output voltage
Overload protection .....53~75W hiccup mode, auto-recovery
Over voltage protection ..CH1: 115%~135% rated output voltage
Leakage current .....Less than 0.75mA at 240VAC
Withstand voltage .....I/P-O/P: 3kVAC, I/P-FG:1.5kVAC(PS-45 2kVAC)
Working temperature .....-10~+60°C (refer to output derating curve)
Safety standards ..... UL60950-1, TUV EN60950-1 approved
EMC standards .....EN55022 class B, EN61000-3-2,3,
EN61000-4-2,3,4,5,6,8,11
Connection ..... 2P, 6P/ 3.96mm pitch, Molex 5277-02 / 5273-06
Packing ..... 0.19kg ; 72pcs / 15.6kg / 1.35CUFT(PS-45)
0.20kg ; 72pcs / 16.0kg / 1.35CUFT(PD-45)
0.21kg ; 72pcs / 17.0kg / 1.35CUFT(PT-45)

❖ Single Output

Model No.	Output	Tol.	R&N	Effi.
PS-45-3.3	3.3V, 0~8.0A	±3%	80mV	69%
PS-45-5	5V, 0~8.0A	±3%	100mV	74%
PS-45-7.5	7.5V, 0~5.4A	±3%	100mV	75%
PS-45-12	12V, 0~3.7A	±2%	100mV	76%
PS-45-13.5	13.5V, 0~3.3A	±2%	100mV	77%
PS-45-15	15V, 0~3.0A	±2%	100mV	77%
PS-45-24	24V, 0~1.9A	±2%	100mV	78%
PS-45-27	27V, 0~1.7A	±2%	100mV	78%
PS-45-48	48V, 0~1.0A	±2%	100mV	78%

❖ Dual Output

Model No.	Output	Tol.	R&N	Effi.	Max.
PD-45A	5V, 0.4~5.0A	±4%	50mV	77%	40W
	12V, 0.2~2.5A	±7%	120mV		
PD-45B	5V, 0.4~5.0A	±4%	50mV	78%	45W
	24V, 0.2~1.8A	±7%	120mV		

❖ Triple Output

Model No.	Output	Tol.	R&N	Effi.	Max.
PT-45A	5V, 0.4~5.0A	±4%	50mV	75%	41W
	12V, 0.2~2.5A	±7%	120mV		
	-5V, 0.0~0.5A	±5%	50mV		
PT-45B	5V, 0.4~5.0A	±4%	50mV	75%	43W
	12V, 0.2~2.5A	±7%	120mV		
	-12V, 0.0~0.5A	±5%	100mV		
PT-45C	5V, 0.4~5.0A	±4%	50mV	75%	44W
	15V, 0.2~2.3A	±7%	120mV		
	-15V, 0.0~0.5A	±5%	100mV		

45W & 65W Triple Output with 3.3V Channel

- Universal AC input / Full range
- Total power for CH1+2: 35W (PT-45)
- Total power for CH1+2: 54W (PT-65)
- Protections: Short circuit / Overload / Over voltage
- Cooling by free air convection
- 100% full load burn-in test
- 2 years warranty

PT-4503
127x 76x 28 mm

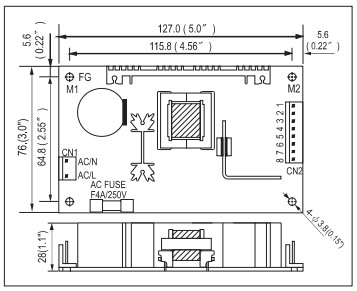

PT-6503
127x 76x 42 mm

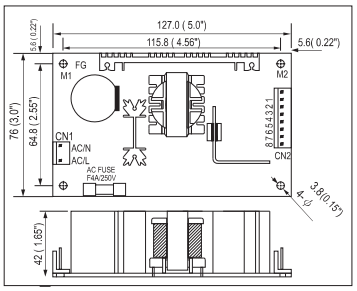

AC input voltage range ..... 90~264VAC; 127~370VDC
AC inrush current ..... Cold start, 20A at 115VAC, 40A at 230VAC
DC adjustment range ..... 3.3V: ±10% rated output voltage
Overload protection ..... 120%~160% hiccup mode, auto-recovery
Over voltage protection .....5V: 115%~135% rated output voltage
Leakage current ..... Less than 1.0mA at 240VAC
Setup, rise, hold up time ..... 800ms, 50ms, 60ms at full load and 230VAC
Withstand voltage .....I/P-O/P: 3kVAC, I/P-FG:1.5kVAC, 1minute
Working temperature ..... -10~+60°C (refer to output derating curve)
Safety standards ..... UL60950-1, TUV EN60950-1 approved
EMC standards .....EN55022 class B, EN61000-3-2,3,
EN61000-4-2,3,4,5,6,11
Connection ..... 2P, 8P/ 3.96mm pitch, Molex: 5277-02, 5273-08
Packing ..... 0.23kg ; 72pcs / 17.6kg / 1.35CUFT(PT-4503)
0.28kg ; 54pcs / 16.2kg / 1.35CUFT(PT-6503)

❖ Triple Output (45W)

Model No.	Output	Tol.	R&N	Effi.	Max.
PT-4503	3.3V, 0.0~5.0A	±2%	50mV	72%	45W
	5V, 0.2~7.0A	+4%,-2%	50mV		
	12V, 0.0~1.2A	±8%	100mV		

❖ Triple Output (65W)

Model No.	Output	Tol.	R&N	Effi.	Max.
PT-6503	3.3V, 0.0~7.0A	±3%	50mV	72%	62W
	5V, 0.2~10A	+4%,-2%	50mV		
	12V, 0.0~1.2A	±8%	100mV		

48hrs delivery—
We keep enough stock for 95% of standard models at our 2400m² warehouse. We can arrange prompt delivery within 48hrs.

Open Frame

65W Single, Dual, and Triple Output

65W 1~3 Output

- Universal AC input / Full range
- Protections: Short circuit / Overload / Over voltage
- Cooling by free air convection
- Low leakage current <0.75mA
- 100% full load burn-in test
- Low cost, high reliability
- 2 years warranty

127x 76x 42 mm

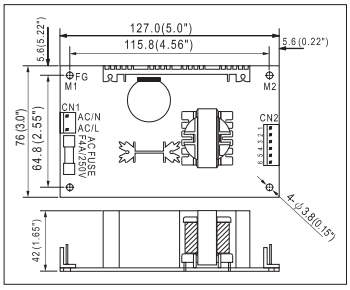

AC input voltage range .....90~264VAC; 127~370VDC
AC inrush current .....Cold start, 20A at 115VAC, 40A at 230VAC
DC adjustment range .....CH1: -5%~+10% rated output voltage
Overload protection .....73~105W hiccup mode, auto-recovery
Over voltage protection .....CH1: 115%~135% rated output voltage
Leakage current .....Less than 0.75mA at 240VAC
Setup, rise, hold up time .....800ms, 20ms, 60ms at full load and 230VAC
Withstand voltage ..... I/P-O/P: 3kVAC, I/P-FG:1.5kVAC(PS-65 2kVAC)
Working temperature .....-10~+60°C (refer to output derating curve)
Safety standards .....UL60950-1, TUV EN60950-1 approved
EMC standards ..... EN55022 class B, EN61000-3-2,3, EN61000-4-2,3,4,5,6,8,11
Connection ..... 2P, 6P/ 3.96mm pitch, Molex P/N: 5277-02, 5273-06
Packing ..... 0.21kg ; 54pcs / 14.2kg / 1.35CUFT(PS-65)
0.24kg ; 54pcs / 15.0kg / 1.35CUFT(PD-65)
0.25kg ; 54pcs / 15.9kg / 1.35CUFT(PT-65)

❖ Single Output

Model No.	Output	Tol.	R&N	Effi.
PS-65-3.3	3.3V, 0~12A	±3%	80mV	69%
PS-65-5	5V, 0~12A	±3%	100mV	76%
PS-65-7.5	7.5V, 0~8.0A	±3%	100mV	79%
PS-65-12	12V, 0~5.2A	±2%	100mV	79%
PS-65-13.5	13.5V, 0~4.7A	±2%	100mV	79%
PS-65-15	15V, 0~4.2A	±2%	100mV	79%
PS-65-24	24V, 0~2.7A	±2%	100mV	80%
PS-65-27	27V, 0~2.4A	±2%	100mV	80%
PS-65-48	48V, 0~1.35A	±2%	100mV	80%

❖ Dual Output

Model No.	Output	Tol.	R&N	Effi.	Max.
PD-65A	5V, 0.4~7.0A	±4%	50mV	78%	61W
	12V, 0.2~3.2A	±7%	120mV		
PD-65B	5V, 0.4~6.0A	±4%	50mV	81%	66W
	24V, 0.2~2.6A	±7%	150mV		

❖ Triple Output

Model No.	Output	Tol.	R&N	Effi.	Max.
PT-65A	5V, 0.4~7.0A	±4%	50mV	76%	60W
	12V, 0.2~3.2A	±7%	120mV		
	-5V, 0.0~0.7A	±5%	50mV		
PT-65B	5V, 0.4~7.0A	±4%	50mV	77%	64W
	12V, 0.2~3.2A	±7%	120mV		
	-12V, 0.0~0.7A	±5%	100mV		
PT-65C	5V, 0.4~7.0A	±4%	50mV	77%	65W
	15V, 0.2~2.6A	±7%	120mV		
	-15V, 0.0~0.7A	±5%	100mV		
PT-65D	5V, 0.5~5.0A	±4%	50mV	79%	68W
	12V, 0.2~4.0A	±6%	100mV		
	24V, 0.2~1.3A	±6%	200mV		

65W 2, 3 Output

- Universal AC input / Full range
- Protections: Short circuit / Overload / Over voltage
- Cooling by free air convection
- 12V or 24V high peak current capability
- 60~65W free air convection, 77~80W with 18 CFM forced air
- Low leakage current < 1mA
- 100% full load burn-in test
- 2 years warranty

127x 76x 29 mm

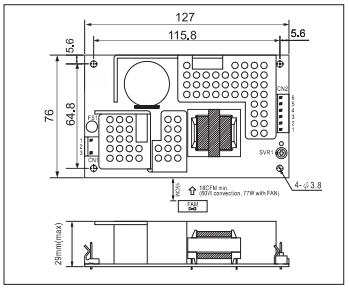

▶ With Case

130x 85x 37 mm

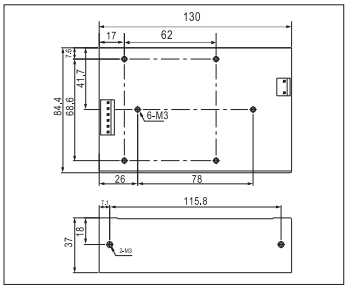

AC input voltage range ..... 90~264VAC; 127~370VDC
AC inrush current .....Cold start, 25A at 115VAC, 50A at 230VAC
DC adjustment range .....CH1 12V: 11.4~12.8V, 24V: 22.8~26.4V
Overload protection .....90~125W hiccup mode, auto-recovery
Over voltage protection ..... CH1: 115%~135% rated output voltage
Leakage current .....Less than 1mA at 240VAC
Setup, rise, hold up time .....800ms, 20ms, 20ms at full load and 230VAC
Withstand voltage ..... I/P-O/P: 3kVAC, I/P-FG: 2kVAC, 1minute
Working temperature ..... -20~+60°C (refer to output derating curve)
Safety standards .....UL60950-1, TUV EN60950-1 approved
EMC standards ..... EN55022 class B, EN61000-3-2,3, EN61000-4-2,3,4,5,6,8,11
Connection ..... 3P, 6P/ 3.96mm pitch, Molex P/N: 5273-03, 5273-06
Packing .....0.24kg ; 63pcs / 16kg / 1.35CUFT (PCB type)
0.47kg ; 32pcs / 16kg / 0.64CUFT (Enclosed type)

❖ Dual Output

Model No.	Output	Tol.	R&N	Effi.	Max.
RPD-65C☐	12V, 0~5.8A	±2%	120mV	79%	60W
	5V, 0~1.5A	±5%	50mV		
RPD-65D☐	24V, 0~2.9A	±2%	150mV	81%	60W
	5V, 0~1.5A	±5%	50mV		

❖ Triple Output

Model No.	Output	Tol.	R&N	Effi.	Max.
RPT-65E☐	12V, 0.18~5.8A	±2%	120mV	77%	63W
	5V, 0.0~1.5A	±5%	100mV		
	-5V, 0.0~0.7A	±5%	120mV		
RPT-65F☐	12V, 0.18~5.8A	±2%	150mV	77%	66W
	5V, 0.0~1.5A	±5%	100mV		
	-12V, 0.0~0.7A	±5%	150mV		
RPT-65G☐	24V, 0.09~2.9A	±2%	150mV	81%	66W
	5V, 0.0~1.5A	±5%	50mV		
	12V, 0.0~0.7A	±5%	100mV		

☐ = blank, -C ; blank: PCB Type, -C: Enclosed Type

Open Frame

110~125W Single, Dual and Triple Output

110W Dual Output

- Universal AC input / Full range
- Power good signal output (option)
- Protections: Short circuit / Overload / Over voltage
- Cooling by free air convection
- 100% full load burn-in test
- Low leakage current <1mA@ 240VAC
- 2 years warranty

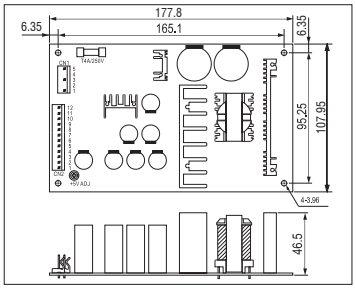

AC input voltage range .. 100~264VAC; 141~370VDC
AC inrush current .....Cold start, 45A at 230VAC
DC adjustment range .....CH1: -5%~+10% rated output voltage
Overload protection .....105%~135% hiccup mode, auto-recovery
Over voltage protection ..CH1: 115%~135% rated output voltage
Withstand voltage ..... I/P-O/P: 3kVAC, I/P-FG:1.5kVAC, 1minute
Working temperature .....-10~+60°C (refer to output derating curve)
Safety standards ..... UL60950-1, TUV EN60950-1 approved
EMC standards ..... EN55022 class B, EN61000-3-2,3, EN61000-4-2,3,4,5,6,11
Connection .....5+12P/ 3.96mm pitch, Molex: 5273-05,12
Packing ..... 0.51kg ; 24pcs / 13.1kg / 1.19CUFT

Model No.	Output	Tol.	R&N	Effi.	Max.
PD-110A	5V, 0.5~5.0A	±2%	100mV	75%	103W
	12V, 0.5~6.5A	±6%	150mV		
PD-110B	5V, 0.5~5.0A	±2%	100mV	78%	109W
	24V, 0.5~3.5A	±6%	200mV		

Energy Saving —
We care about energy saving. This logo represents that this model has "low no load power consumption"!

To satisfy our customers is our goal —
- High Quality
- Low Cost
- Prompt Delivery
- Best Service

We provide specification, drawing, test report and more information, please visit our website —
http://www.meanwell.com

Products —
- One Stop Shopping
- Total Solution

Customer Satisfaction —
Today's effort, tomorrow's reward. Continuously improve CQTS to satisfy customer is our goal.

We are a TQM (Total Quality Management) company and ISO-9001 certified since 1994.

Who can provide you better services and be a trustworthy partner in the power industry?
— "**MEAN WELL**" tries to be —

Best products also need best service.
We have authorized distributors all over the world. They have sufficient stock for your prompt delivery. Also they can offer you technical support & RMA services. Please contact your local distributors for more product information. You can also contact us at info@meanwell.com for information of your local distributors.

125W 1,3 Output with PFC Function

- Universal AC input / Full range
- Built-in active PFC function
- High power density 6.117W/in³
- Protections: Short circuit / Overload / Over voltage
- Built-in remote sense for PPS-125
- LED indicator for power on
- Free air convection for 100W and 125W with 18 CFM forced air
- 100% full load burn-in test
- 3 years warranty

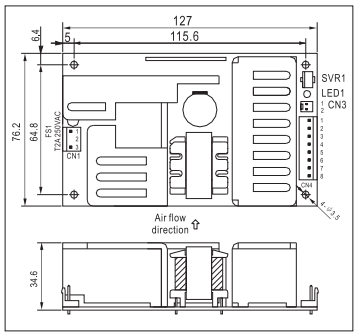

AC input voltage range .....90~264VAC; 127~370VDC
AC inrush current .....Cold start, 24A at 230VAC
DC adjustment range .....CH1: ±5% rated output voltage
Overload protection .....130%~160% fold back current limiting, auto-recovery
Over voltage protection ..... CH1:110%~135% rated output voltage
Leakage current ..... Less than 2.0mA at 240VAC
Setup, rise, hold up time .... 1000ms, 30ms, 24ms at full load and 230VAC
Withstand voltage ..... I/P-O/P: 3kVAC, I/P-FG:1.5kVAC, 1minute
Working temperature .....-20~+70°C (refer to output derating curve)
Safety standards ..... UL60950-1, TUV EN60950-1 approved
EMC standards ..... EN55022 class B, EN61000-3-2,3, EN61000-4-2,3,4,5,6,8,11
Connection .....3+8P /3.96mm pitch, JST: B3P/B8P-VH (PPS-125)
3+5Px2 /3.96mm pitch, JST: B3P/B5Px2-VH (PPT-125)
Packing .....0.37kg; 36pcs / 14.3kg / 0.79CUFT

❖ Single Output

Model No.	Output	Tol.	R&N	Effi.
PPS-125-3.3	3.3V, 0~25A	±2%	100mV	70%
PPS-125-5	5V, 0~25A	±2%	100mV	79%
PPS-125-12	12V, 0~10.5A	±2%	100mV	80%
PPS-125-13.5	13.5V, 0~9.3A	±2%	100mV	80%
PPS-125-15	15V, 0~8.4A	±2%	100mV	80%
PPS-125-24	24V, 0~5.2A	±1%	150mV	83%
PPS-125-27	27V, 0~4.6A	±1%	150mV	83%
PPS-125-48	48V, 0~2.6A	±1%	250mV	84%

❖ Triple Output

Model No.	Output	Tol.	R&N	Effi.	Max
PPT-125A	3.3V, 1.0~12.5A	±3%	100mV	75%	99W
	5V, 0.8~10.0A	±5%	100mV		
	12V, 0.05~0.63A	±6%	120mV		
PPT-125B	5V, 1.0~14.38A	±3%	100mV	78%	124W
	12V, 0.3~3.75A	±5%	120mV		
	-12V, 0.05~0.63A	±6%	120mV		
PPT-125C	5V, 1.0~13.75A	±3%	100mV	78%	125W
	15V, 0.25~3.13A	±5%	150mV		
	-15V, 0.05~0.63A	±6%	150mV		
PPT-125D	5V, 1.0~8.75A	±3%	100mV	78%	126W
	24V, 0.25~3.13A	±5%	240mV		
	12V, 0.05~0.63A	±6%	120mV		

Open Frame

150~250W Single and Dual Output

150W Single Output with PFC Function

- Universal AC input / Full range
- Built-in active PFC function
- Protections: Short circuit / Overload / Over voltage / Over temp.
- Cooling by free air convection
- High power density 8.4W/in³
- No load power consumption<1W
- 100% full load burn-in test
- 3 years warranty

169x 60.7x 28.5 mm

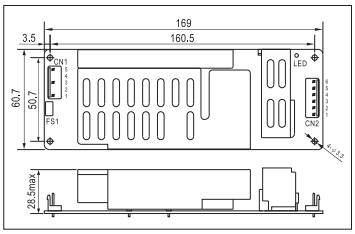

AC input voltage range .....90~264VAC ; 127~370VDC
DC adjustment range ..... Can be modified between ±10% rated output voltage by factory
Overload protection ..... 105%~135% hiccup mode, auto-recovery
Over voltage protection ..... 110%~135% rated output voltage
Withstand voltage ..... I/P-O/P: 4.25kVDC, I/P-FG:1.5kVAC, 1minute
Working temperature ..... -20~+60°C (refer to output derating curve)
Safety standards ..... UL60950-1 approved
EMC standards ..... EN55022 class B, EN61000-3-2,3, EN61000-4-2,3,4,5,6,8,11
Connection ..... 5+6P/3.96mm pitch, JST P/N :B5P/B6P-VH
Packing ..... 0.32kg ; 48pcs / 15.8kg / 0.79CUFT

Model No.	Output	Tol.	R&N	Effi.
ASP-150-12	12V, 0~11A	±2%	150mV	88%
ASP-150-15	15V, 0~9.5A	±2%	180mV	88%
ASP-150-20	20V, 0~7.5A	±1%	200mV	90%
ASP-150-24	24V, 0~6.3A	±1%	240mV	90%
ASP-150-48	48V, 0~3.2A	±1%	240mV	89%

200W Single Output with PFC Function

- Universal AC input / Full range
- High efficiency up to 90%
- PF>0.98@115VAC; >0.93@230VAC
- Protections: Short circuit / Overload / Over voltage / Over temp.
- High power density 9.78W/in³
- 5"x3" compact size
- ZVS technology to reduce power dissipation
- Built-in remote sense function
- Free air convection for 150W and 200W with 20.5 CFM forced air
- 3 years warranty

127x 76.2x 35.1 mm

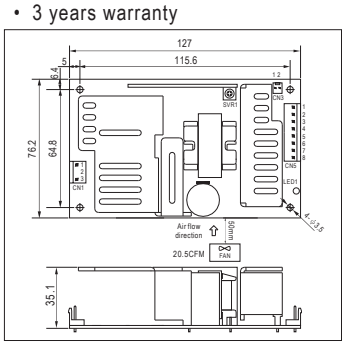

AC input voltage range ..... 90~264VAC; 127~370VDC
DC adjustment range ..... ±10% rated output voltage
Overload protection ..... 105%~135% hiccup mode, auto-recovery
Over voltage protection ..... 115%~135% rated output voltage
Withstand voltage ..... I/P-O/P: 3kVAC, I/P-FG:1.5kVAC, 1minute
Working temperature ..... -20~+70°C (refer to output derating curve)
Safety standards ..... UL60950-1, TUV EN60950-1 approved
EMC standards ..... EN55022 class B, EN61000-3-2,3 EN61000-4-2,3,4,5,6,8,11
Connection ..... 3+8P/3.96mm pitch, JST B3P/B8P-VH
Packing ..... 0.37kg ; 36pcs / 14.3kg / 0.79CUFT

Model No.	Output	Tol.	R&N	Effi.
PPS-200-5	5V, 0~36.0A	±4%	100mV	86%
PPS-200-12	12V, 0~16.6A	±3%	100mV	89%
PPS-200-15	15V, 0~13.3A	±3%	100mV	89%
PPS-200-24	24V, 0~8.30A	±2%	150mV	89%
PPS-200-27	27V, 0~7.40A	±2%	150mV	89%
PPS-200-48	48V, 0~4.167A	±2%	250mV	90%

250W Isolated Dual Output with PFC Function

- Universal AC input / Full range
- Isolated output & GND for CH1,CH2
- Built-in active PFC function
- Protections: Short circuit / Overload / Over voltage / Over temp.
- Optional case available
- Cooling by free air convection
- Remote control function for CH1
- Peak load 170% for 10 sec. (CH1)
- 100% full load burn-in test
- 3 years warranty

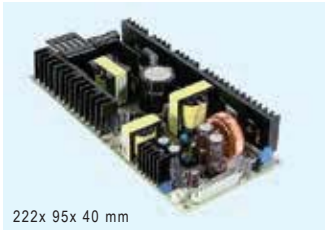
222x 95x 40 mm

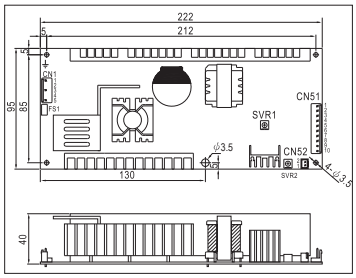

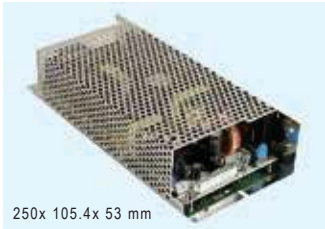
250x 105.4x 53 mm

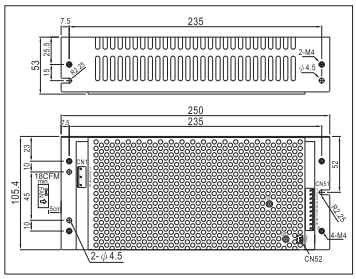

AC input voltage range ..... 90~264VAC; 127~370VDC
AC inrush current ..... Cold start, 58A at 230VAC
Leakage current ..... Less than 3.5mA at 240VAC
DC adjustment range ..... ±10% for CH1; ±5% for CH2
Overload protection(CH1) ..... 105%~170% normally operation, shut off after 10 sec.; >180%, constant current, shut off after 10 sec.
(CH2) ..... 101%~150% hiccup mode, auto-recovery
Over voltage protection ..... CH1: 115%~140%, CH2: 110%~135%
Setup, rise, hold up time ..... 1200ms, 60ms, 30ms at full load and 230VAC
Withstand voltage I/P-O/P:3.0kVAC, I/P-FG:2kVAC, 1minute
Working temperature ..... -20~+70°C (refer to output derating curve)
Safety standards ..... UL60950-1, TUV EN60950-1 approved
EMC standards ..... EN55022 class B, EN61000-3-2,-3 EN61000-4-2,3,4,5,6,8,11, EN61000-6-2
Connection ..... 5+10+2P/3.96mm pitch JST B5P/B10P-VH, B2B-XH
Packing ..... 0.74kg ; 18pcs / 14.3kg / 0.88CUFT (PCB type); 1.6kg ; 9pcs / 15.4kg / 0.61CUFT (Enclosed type)

Model No.	Output	Tol.	R&N	Effi.
PID-250A	12V, 0~15A	±3%	120mV	83%
	5V, 0~5.0A	±2%	50mV	
PID-250B	24V, 0~9.4A	±2%	150mV	86%
	5V, 0~5.0A	±2%	50mV	
PID-250C	36V, 0~6.3A	±2%	200mV	86%
	5V, 0~5.0A	±2%	50mV	
PID-250D	48V, 0~4.7A	±2%	200mV	86%
	5V, 0~5.0A	±2%	50mV	

Feature Description

PID-250 series is suitable for motor-based equipment with logic control circuit. CH1 with high peak power capability can provide the required surge loading while starting up the motor. The isolated 5V/5A CH2 is good for logic control usage and can still work properly even CH1 is malfunction or at any protection modes. The isolated design between CH1 and CH2 can significantly prevent noise of the motor action from entering control circuits and hence secure the accurate operation of the end equipment.

Open Frame

50~150W Single Output

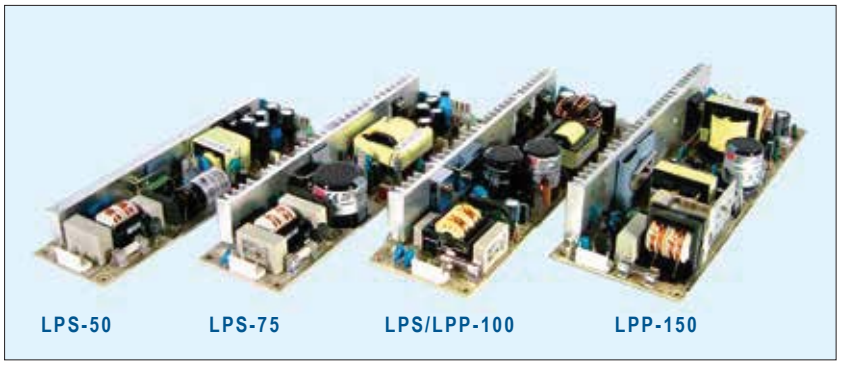

Features

- Universal AC input / Full range
- Built-in active PFC function (LPP-100/150)
- Protections: Short circuit / Overload / Over voltage
- Optional over temperature protection for LPP-150
- Built-in remote ON/OFF control (LPS-50/75)
- Cooling by free air convection
- 100% full load burn-in test
- 2 years warranty for LPS series
  3 years warranty for LPP series

LPS-50	LPS-75	LPS/LPP-100	LPP-150

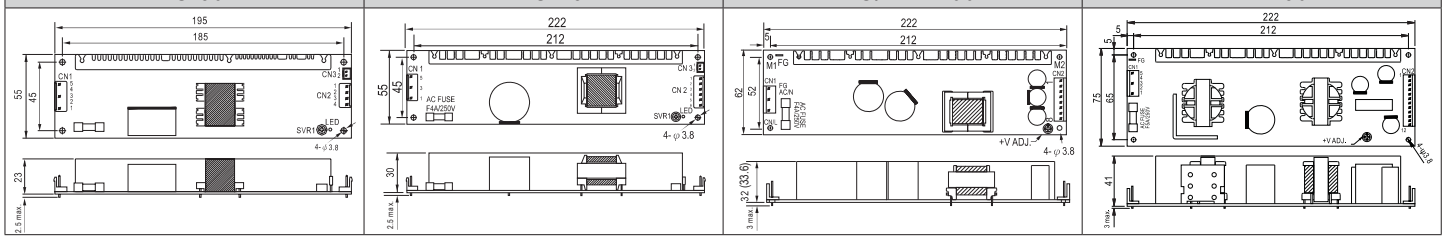

General Specification (Please refer to www.meanwell.com for detail spec.)

Model No.		LPS-50	LPS-75	LPS-100	LPP-100	LPP-150
AC input voltage range		90~264VAC		115/230 auto switch	85~264VAC	
AC inrush current (230VAC)		35A	36A	60A	30A	55A
DC adjustment range		±10% rated output voltage			-5%~+10% rated output voltage	
Overload protection	Range	122%~160%	115%~150%	105%~140%	105%~150% rated output power	
	Type	Hiccup mode, auto recovery			Constant current limiting, auto recovery	
Over voltage protection	Range	110%~135% of rated output voltage				
	Type	Hiccup mode, auto recovery			Shut off, AC recycle to re-start	
Withstand voltage		I/P-O/P: 3kVAC, I/P-FG:1.5kVAC(2kVAC for LPP-150), O/P-FG: 0.5kVAC, 1 minute				
Working temperature		-20~+70°C (refer to output derating curve)		-10~+60°C (refer to output derating curve)		
Safety standards		UL60950-1, TUV EN60950-1 approved				
EMC standards		EN55022 class B, EN61000-3-2,3, EN61000-4-2,3,4,5,6,8,11 (EN61000-6-2 heavy industry level for LPS-50/75 only)				
Connection		JST B5P / B4P-VH	JST B5P / B6P-VH	JST B5P / B8P-VH		JST B5P / B6Px2-VH
Dimension (LxWxH)(mm)		195x 55x 23	222x 55x 30	222x 62x 32	222x 62x 33.6	222x 75x 41
Packing		48pcs / 12.5kg	48pcs / 15.6kg	24pcs / 12.5kg	24pcs / 13.9kg	24pcs / 16.6kg

50W — LPS-50

Model No.	Output	Tol.	R&N	Effi.
LPS-50-3.3	3.3V, 0~10A	±3%	50mV	75%
LPS-50-5	5V, 0~10A	±3%	50mV	81%
LPS-50-12	12V, 0~4.2A	±2%	80mV	82%
LPS-50-15	15V, 0~3.4A	±2%	80mV	84%
LPS-50-24	24V, 0~2.1A	±1%	80mV	85%
LPS-50-48	48V, 0~1.1A	±1%	100mV	86%

75W — LPS-75

Model No.	Output	Tol.	R&N	Effi.
LPS-75-3.3	3.3V, 0~15A	±3%	80mV	69%
LPS-75-5	5V, 0~15A	±3%	80mV	77%
LPS-75-12	12V, 0~6.2A	±2%	100mV	80%
LPS-75-15	15V, 0~5.0A	±2%	100mV	81%
LPS-75-24	24V, 0~3.2A	±2%	120mV	83%
LPS-75-48	48V, 0~1.56A	±2%	120mV	83%

100W — LPS-100

Model No.	Output	Tol.	R&N	Effi.
LPS-100-3.3	3.3V, 0~20A	±3%	150mV	69%
LPS-100-5	5V, 0~20A	±3%	100mV	77%
LPS-100-7.5	7.5V, 0~13.3A	±2%	100mV	77%
LPS-100-12	12V, 0~8.4A	±2%	100mV	79%
LPS-100-13.5	13.5V, 0~7.5A	±2%	100mV	79%
LPS-100-15	15V, 0~6.7A	±2%	100mV	80%
LPS-100-24	24V, 0~4.2A	±1%	150mV	80%
LPS-100-27	27V, 0~3.8A	±1%	150mV	81%
LPS-100-48	48V, 0~2.1A	±1%	200mV	81%

100W (with PFC Function) — LPP-100

Model No.	Output	Tol.	R&N	Effi.
LPP-100-3.3	3.3V, 0~20A	±2%	100mV	69%
LPP-100-5	5V, 0~20A	±2%	100mV	75%
LPP-100-7.5	7.5V, 0~13.5A	±2%	100mV	76%
LPP-100-12	12V, 0~8.5A	±2%	100mV	79%
LPP-100-13.5	13.5V, 0~7.5A	±2%	100mV	79%
LPP-100-15	15V, 0~6.7A	±2%	100mV	80%
LPP-100-24	24V, 0~4.2A	±1%	150mV	83%
LPP-100-27	27V, 0~3.8A	±1%	150mV	83%
LPP-100-48	48V, 0~2.1A	±1%	250mV	83%

150W (with PFC Function) — LPP-150

Model No.	Output	Tol.	R&N	Effi.
LPP-150-3.3	3.3V, 0~30A	±2%	100mV	70%
LPP-150-5	5V, 0~30A	±2%	100mV	76%
LPP-150-7.5	7.5V, 0~20A	±2%	100mV	80%
LPP-150-12	12V, 0~12.5A	±2%	100mV	82%
LPP-150-13.5	13.5V, 0~11.2A	±2%	100mV	83%
LPP-150-15	15V, 0~10A	±2%	100mV	83%
LPP-150-24	24V, 0~6.3A	±1%	150mV	85%
LPP-150-27	27V, 0~5.6A	±1%	150mV	85%
LPP-150-48	48V, 0~3.2A	±1%	250mV	85%

Green Open Frame

1~20W AC/DC Miniature Encapsulated Type

Features

- Universal AC input / Full range
- No load power consumption < 0.075W (<0.1W for IRM-5~20)
- Miniature size, high power density
- Protections: Short circuit / Overload / Over voltage
- Cooling by free air convection
- Isolation Class II
- Comply with EN55022 class B without any additional components
- Fully isolated plastic case
- Withstand 5G vibration test
- Low cost, high reliability
- Pass LPS
- 3 years warranty

General Specification (Please refer to www.meanwell.com for detail spec.)

Model No.	IRM-01-x S	IRM-02-x S	IRM-03-x S	IRM-05	IRM-10	IRM-15	IRM-20
AC input voltage range	85~305VAC			85~264VAC; 120~370VDC			
Overload protection	105%~160%		105%~260%	115%~260%	115%~190%		115%~160%
Over voltage protection	115%~135% rated output voltage						
Withstand voltage	I/P-O/P: 3kVAC						
Working temperature	-30~+85°C			-30~+70°C (refer to output derating curve)			
Safety standards	UL60950-1, TUV EN60950-1 approved (IRM-01/02 pending); Design refer to IEC60601-1 for IRM-01/02/03						
EMC standards	EN55022 class B, EN61000-3-2,3, EN61000-4-2,3,4,5,6,8,11 (IRM-01/02 pending)						
Dimension (LxWxH)(mm)	PCB: 33.7x 22.2x 15 SMD: 33.7x 22.2x 16		PCB: 37x 24x 15 SMD: 37x 24x 16	45.7x 25.4x 21.5		52.4x 27.2x 24	

1W — Under Development — IRM-01

Model No.	Output	Tol.	R&N	Effi.
IRM-01-3.3☐	3.3V, 0~300mA	±1%	100mV	66%
IRM-01-5☐	5V, 0~200mA	±1%	100mV	70%
IRM-01-9☐	9V, 0~111mA	±1%	100mV	72%
IRM-01-12☐	12V, 0~83mA	±1%	150mV	74%
IRM-01-15☐	15V, 0~67mA	±1%	200mV	75%
IRM-01-24☐	24V, 0~42mA	±1%	240mV	77%

☐= Blank, S ; Blank: PCB mounting style, S: SMD type

2W — Under Development — IRM-02

Model No.	Output	Tol.	R&N	Effi.
IRM-02-3.3☐	3.3V, 0~600mA	±1%	100mV	66%
IRM-02-5☐	5V, 0~400mA	±1%	100mV	70%
IRM-02-9☐	9V, 0~222mA	±1%	100mV	72%
IRM-02-12☐	12V, 0~167mA	±1%	150mV	74%
IRM-02-15☐	15V, 0~133mA	±1%	200mV	75%
IRM-02-24☐	24V, 0~83mA	±1%	240mV	77%

☐= Blank, S ; Blank: PCB mounting style, S: SMD type

3W — NEW — IRM-03

Model No.	Output	Tol.	R&N	Effi.
IRM-03-3.3☐	3.3V, 0~900mA	±2%	100mV	68%
IRM-03-5☐	5V, 0~600mA	±2%	100mV	72%
IRM-03-9☐	9V, 0~333mA	±2%	100mV	77%
IRM-03-12☐	12V, 0~250mA	±1%	150mV	78%
IRM-03-15☐	15V, 0~200mA	±1%	200mV	78%
IRM-03-24☐	24V, 0~125mA	±1%	240mV	80%

☐= Blank, S ; Blank: PCB mounting style, S: SMD type

5W — IRM-05

Model No.	Output	Tol.	R&N	Effi.
IRM-05-3.3	3.3V, 0~1.25A	±2.5%	200mV	68%
IRM-05-5	5V, 0~1A	±2.5%	200mV	71%
IRM-05-12	12V, 0~0.42A	±2.5%	200mV	75%
IRM-05-15	15V, 0~0.33A	±2.5%	200mV	75%
IRM-05-24	24V, 0~0.23A	±2.5%	200mV	77%

10W — IRM-10

Model No.	Output	Tol.	R&N	Effi.
IRM-10-3.3	3.3V, 0~2.5A	±2.5%	200mV	74%
IRM-10-5	5V, 0~2A	±2.5%	200mV	77%
IRM-10-12	12V, 0~0.85A	±2.5%	200mV	82%
IRM-10-15	15V, 0~0.67A	±2.5%	200mV	82%
IRM-10-24	24V, 0~0.42A	±2.5%	200mV	82%

15W — IRM-15

Model No.	Output	Tol.	R&N	Effi.
IRM-15-3.3	3.3V, 0~3.5A	±2.5%	200mV	74%
IRM-15-5	5V, 0~3A	±2.5%	200mV	78%
IRM-15-12	12V, 0~1.25A	±2.5%	200mV	82%
IRM-15-15	15V, 0~1A	±2.5%	200mV	82%
IRM-15-24	24V, 0~0.63A	±2.5%	200mV	83%

20W — IRM-20

Model No.	Output	Tol.	R&N	Effi.
IRM-20-3.3	3.3V, 0~4.5A	±2.5%	200mV	76%
IRM-20-5	5V, 0~4A	±2.5%	200mV	79%
IRM-20-12	12V, 0~1.8A	±2.5%	200mV	84%
IRM-20-15	15V, 0~1.4A	±2.5%	200mV	84%
IRM-20-24	24V, 0~0.9A	±2.5%	200mV	85%

Green Open Frame 30~60W AC/DC Miniature Encapsulated Type

IRM-30

IRM-30-xST

NEW

IRM-45/60

NEW

IRM-45/60-xST

Features

- Universal AC input / Full range
- No load power consumption < 0.1W
- Miniature size, high power density
- Protections: Short circuit / Overload / Over voltage
- Cooling by free air convection
- Isolation Class II
- Fully isolated plastic case
- Comply with EN55022 class B without any additional components
- Withstand 5G vibration test
- Low cost, high reliability
- Pass LPS (except for IRM-45/60 5V)
- 3 years warranty

General Specification (Please refer to www.meanwell.com for detail spec.)

Model No.	IRM-30-x ST	IRM-45-x ST	IRM-60-x ST
AC input voltage range	85~264VAC		
AC inrush current (max.)	Cold start, 25A at 115VAC, 45A at 230VAC	Cold start, 30A at 115VAC, 60A at 230VAC	
Overload protection	105%~160%	115%~160%	
Over voltage protection	105%~135%		
Setup, rise, hold up time	1000ms, 30ms, 40ms at 230VAC	1000ms, 30ms, 50ms at 230VAC	
Leakage current	Less than 0.25mA at 240VAC		
Withstand voltage	I/P-O/P: 3kVAC		
Working temperature	-30~+70°C (refer to output derating curve)		
Vibration	10~500Hz, 5G 10min./1 cycle, period for 60 min. each along X, Y, Z axes		
Safety standards	UL60950-1, TUV EN60950-1 approved		
EMC standards	EN55022 class B, EN61000-3-2,3, EN61000-4-2,3,4,5,6,8,11		
Connection	4 industrial pins		
Dimension (LxWxH)(mm)	PCB mounting: 69.5x 39x 24; Screw I/O: 91x 39.5x 28.5	PCB mounting: 87x 52x 29.5; Screw I/O: 109x 52x 33.5	

30W IRM-30

Model No.	Output	Tol.	R&N	Effi.
IRM-30-5□	5V, 0~6A	±2.5%	120mV	83%
IRM-30-12□	12V, 0~2.5A	±2.5%	150mV	88%
IRM-30-15□	15V, 0~2A	±2.5%	200mV	88%
IRM-30-24□	24V, 0~1.3A	±2.5%	240mV	88.5%
IRM-30-48□	48V, 0~0.63A	±2.5%	300mV	90%

□ = Blank, ST ; Blank: PCB mounting style, ST: Screw terminal style

45W NEW IRM-45

Model No.	Output	Tol.	R&N	Effi.
IRM-45-5□	5V, 0~8A	±2.5%	80mV	83.5%
IRM-45-12□	12V, 0~3.8A	±2.5%	150mV	87.5%
IRM-45-15□	15V, 0~3A	±2.5%	180mV	88.5%
IRM-45-24□	24V, 0~1.9A	±2.5%	200mV	89.5%
IRM-45-48□	48V, 0~0.94A	±2.5%	300mV	90.5%

□ = Blank, ST ; Blank: PCB mounting style, ST: Screw terminal style

60W NEW IRM-60

Model No.	Output	Tol.	R&N	Effi.
IRM-60-5□	5V, 0~10A	±2.5%	80mV	84%
IRM-60-12□	12V, 0~5A	±2.5%	120mV	87.5%
IRM-60-15□	15V, 0~4A	±2.5%	120mV	89%
IRM-60-24□	24V, 0~2.5A	±2.5%	150mV	90%
IRM-60-48□	48V, 0~1.25A	±2.5%	240mV	91%

□ = Blank, ST ; Blank: PCB mounting style, ST: Screw terminal style

Green Open Frame

15~65W Single Output

EPS-15
(2.5"x1.8")

EPS-25/35
(3"x2")

NEW
EPS-45S/65S
(3"x2")

Features

- Universal AC input / Full range
- No load power consumption <0.1W(<0.3W for 15~35W)
- High efficiency up to 91%
- Compact size, 1U low profile
- Cooling by free air convection
- Protections: Short circuit / Overload / Over voltage
- Class I or Class II installations
- LED indicator for power on (EPS-25/35/45S/65S)
- 3 years warranty

General Specification (Please refer to www.meanwell.com for detail spec.)

Model No.		EPS-15	EPS-25	EPS-35	EPS-45S	EPS-65S
AC input voltage range		85~264VAC; 120~370VDC			80~264VAC	
AC inrush current (max.)		Cold start, 45A at 230VAC	Cold start, 35A at 230VAC	Cold start, 40A at 230VAC	Cold start, 60A at 230VAC	
DC adjustment range		±10% rated output voltage			-5~+10% rated output voltage	
Overload protection	Range	115%~150% rated output power	115%~170% rated output power		115%~150% rated output power	
	Type	Hiccup mode, auto-recovery				
Over voltage protection		110%~135% shut down o/p voltage, re-power on to recover				
Withstand voltage		I/P-O/P: 3kVAC, I/P-FG:2kVAC, O/P-FG: 0.5kVAC				
Working temperature		-30~+70°C (refer to output derating curve)				
Safety standards		UL60950-1, TUV EN60950-1 approved (EPS-45S/65S pending)				
EMC standards		EN55022 class B, EN61000-3-2,3, EN61000-4-2,3,4,5,6,8,11 (EPS-45S/65S pending)				
Connection		JST B3P/B2P-VH			JST B3P/B4P-VH	
Dimension (LxWxH)(mm)		63.5x45.7x24	76.2x50.8x24			

15W—Class I — EPS-15

Model No.	Output(Rated / Peak 10 sec.)	Tol.	R&N	Effi.
EPS-15-3.3	3.3V, 0~3A / 3.3A	±2%	50mV	75%
EPS-15-5	5V, 0~3A / 3.3A	±2%	50mV	78%
EPS-15-7.5	7.5V, 0~2A / 2.2A	±2%	80mV	81%
EPS-15-12	12V, 0~1.25A / 1.38A	±1%	80mV	82%
EPS-15-15	15V, 0~1A / 1.1A	±1%	100mV	83%
EPS-15-24	24V, 0~0.625A / 0.69A	±1%	150mV	83%
EPS-15-27	27V, 0~0.56A / 0.615A	±1%	180mV	84%
EPS-15-36	36V, 0~0.42A / 0.46A	±1%	200mV	85%
EPS-15-48	48V, 0~0.313A / 0.344A	±1%	200mV	85%

25W—Class I — EPS-25

Model No.	Output(Rated / Peak 10 sec.)	Tol.	R&N	Effi.
EPS-25-3.3	3.3V, 0~5A / 5.5A	±2%	60mV	79%
EPS-25-5	5V, 0~5A / 5.5A	±2%	60mV	81%
EPS-25-7.5	7.5V, 0~3.4A / 3.74A	±2%	80mV	83%
EPS-25-12	12V, 0~2.1A / 2.34A	±1%	100mV	86%
EPS-25-15	15V, 0~1.7A / 1.87A	±1%	100mV	87%
EPS-25-24	24V, 0~1.05A / 1.17A	±1%	180mV	88%
EPS-25-27	27V, 0~0.95A / 1.05A	±1%	180mV	89%
EPS-25-36	36V, 0~0.7A / 0.78A	±1%	200mV	89%
EPS-25-48	48V, 0~0.53A / 0.59A	±1%	240mV	90%

35W—Class I — EPS-35

Model No.	Output(Rated / Peak 10 sec.)	Tol.	R&N	Effi.
EPS-35-3.3	3.3V, 0~6A / 6.6A	±2.5%	60mV	80%
EPS-35-5	5V, 0~6A / 6.6A	±2.0%	70mV	82%
EPS-35-7.5	7.5V, 0~4.7A / 5.2A	±2.0%	80mV	84%
EPS-35-12	12V, 0~3A / 3.3A	±1.0%	100mV	87%
EPS-35-15	15V, 0~2.4A / 2.65A	±1.0%	100mV	88%
EPS-35-24	24V, 0~1.5A / 1.65A	±1%	180mV	89%
EPS-35-27	27V, 0~1.3A / 1.45A	±1%	180mV	89%
EPS-35-36	36V, 0~1A / 1.1A	±1%	200mV	89%
EPS-35-48	48V, 0~0.75A / 0.82A	±1%	240mV	90%

45W—Class II — NEW EPS-45S

Model No.	Output(Rated / Peak 10 sec.)	Tol.	R&N	Effi.
EPS-45S-3.3	3.3V, 0~8A / 8.8A	±2%	80mV	80%
EPS-45S-5	5V, 0~8A / 8.8A	±2%	80mV	83%
EPS-45S-7.5	7.5V, 0~5.4A / 5.95A	±2%	80mV	85%
EPS-45S-12	12V, 0~3.8A / 4.18A	±2%	120mV	88%
EPS-45S-15	15V, 0~3A / 3.3A	±2%	150mV	89%
EPS-45S-24	24V, 0~1.9A / 2.1A	±1%	240mV	90%
EPS-45S-48	48V, 0~0.94A / 1.03A	±1%	300mV	91%

65W—Class II — NEW EPS-65S

Model No.	Output(Rated / Peak 10 sec.)	Tol.	R&N	Effi.
EPS-65S-3.3	3.3V, 0~11A / 12.12A	±2%	80mV	80%
EPS-65S-5	5V, 0~10A / 11A	±2%	80mV	83%
EPS-65S-7.5	7.5V, 0~8A / 8.8A	±2%	80mV	85%
EPS-65S-12	12V, 0~5.42A / 5.96A	±2%	120mV	88%
EPS-65S-15	15V, 0~4.34A / 4.77A	±2%	150mV	89%
EPS-65S-24	24V, 0~2.71A / 2.98A	±1%	240mV	90%
EPS-65S-48	48V, 0~1.36A / 1.49A	±1%	300mV	91%

Green Open Frame

45~120W Single Output

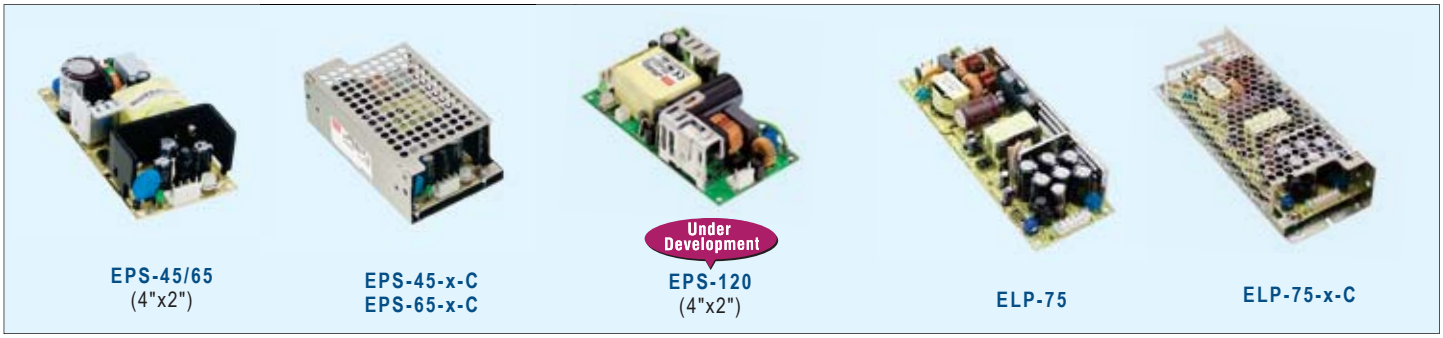

EPS-45/65 (4"x2") | EPS-45-x-C EPS-65-x-C | EPS-120 (4"x2") | ELP-75 | ELP-75-x-C

Features

- Compact size, 1U low profile
- Universal AC input / Full range
- Built-in active PFC function (ELP-75)
- Class I or Class II installations
- No load power consumption < 0.3W (<0.5W for ELP-75)
- High efficiency up to 91%
- Protections: Short circuit / Overload / Over voltage / Over temp.(EPS-120)
- Cooling by free air convection
- Built-in 12V/0.5A auxiliary output (EPS-120)
- LED indicator for power on
- 3 years warranty

(ELP-75)

General Specification (Please refer to www.meanwell.com for detail spec.)

Model No.		EPS-45-x(-C)	EPS-65-x(-C)	EPS-120	ELP-75-x(-C)
Rated Power	Fan	NA	NA	120W (20.5CFM)	NA
	Convection	45W	65W	90W	75W
AC input voltage range		90~264VAC		80~264VAC	90~264VAC
DC adjustment range		±10% rated output voltage		±5%	±10%
Overload protection	Range	115%~150% rated output power			105%~150% rated output power
	Type	Hiccup mode, auto-recovery			
Over voltage protection		110%~130% shut down o/p voltage, re-power on to recover			
Withstand voltage		I/P-O/P: 3kVAC, I/P-FG:2kVAC, O/P-FG: 0.5kVAC, 1 minute			I/P-O/P: 3kVAC, I/P-FG:1.5kVAC, O/P-FG: 0.5kVAC
Working temperature		-30~+70°C (refer to output derating curve)			
Safety standards		UL60950-1, TUV EN60950-1 approved (EPS-120 pending)			
EMC standards		EN55022 class B, EN61000-3-2,3, EN61000-4-2,3,4,5,6,8,11 (EPS-120 pending)			
Connection		3+4P/3.96mm pitch, JST B3P/B4P-VH			3+4P/3.96mm pitch, JST B3P/B6P-VH
Dimension (LxWxH)(mm)		PCB: 101.6x50.8x29 ; Case: 103.4x62x37		101.6x 50.8x 29	PCB: 175x 60x 27 ; Case: 195x 68.5x 33

45W—Class I — EPS-45

Model No.	Output(Rated / Peak 10 sec.)	Tol.	R&N	Effi.
EPS-45-3.3□	3.3V, 0~8A / 9A	±3%	80mV	80%
EPS-45-5□	5V, 0~8A / 9A	±2%	80mV	82%
EPS-45-7.5□	7.5V, 0~5.4A / 5.6A	±2%	100mV	84%
EPS-45-12□	12V, 0~3.75A / 4.2A	±2%	120mV	87%
EPS-45-15□	15V, 0~3A / 3.3A	±2%	150mV	88%
EPS-45-24□	24V, 0~1.9A / 2.1A	±1%	240mV	89%
EPS-45-36□	36V, 0~1.25A / 1.4A	±1%	280mV	89%
EPS-45-48□	48V, 0~1A / 1.1A	±1%	300mV	90%

□= blank, -C ; blank: PCB type, -C: Enclosed type

120W—Class I or II — Under Development EPS-120

Model No.	Output	Tol.	R&N	Effi.
EPS-120-12	12V, 0~10A	±2%	120mV	88.0%
EPS-120-15	15V, 0~8A	±2%	120mV	88.5%
EPS-120-24	24V, 0~5A	±1%	150mV	90.0%
EPS-120-27	27V, 0~4.5A	±1%	150mV	90.0%
EPS-120-48	48V, 0~2.5A	±1%	200mV	91.0%

65W—Class I — EPS-65

Model No.	Output(Rated / Peak 10 sec.)	Tol.	R&N	Effi.
EPS-65-3.3□	3.3V, 0~11A / 12A	±3%	80mV	80%
EPS-65-5□	5V, 0~11A / 12A	±2%	80mV	82%
EPS-65-7.5□	7.5V, 0~8A / 8.8A	±2%	100mV	84%
EPS-65-12□	12V, 0~5.42A / 6A	±2%	120mV	86%
EPS-65-15□	15V, 0~4.34A / 4.8A	±2%	150mV	87%
EPS-65-24□	24V, 0~2.71A / 3A	±1%	240mV	88%
EPS-65-36□	36V, 0~1.81A / 2A	±1%	280mV	89%
EPS-65-48□	48V, 0~1.36A / 1.5A	±1%	300mV	90%

□ = blank, -C ; blank: PCB type, -C: Enclosed type

75W—Class I — ELP-75

Model No.	Output	Tol.	R&N	Effi.
ELP-75-3.3□	3.3V, 0~15A	±3%	80mV	80%
ELP-75-5□	5V, 0~15A	±2%	80mV	82%
ELP-75-12□	12V, 0~6.25A	±2%	120mV	89%
ELP-75-15□	15V, 0~5A	±2%	150mV	90%
ELP-75-24□	24V, 0~3.15A	±1%	240mV	90%
ELP-75-36□	36V, 0~2.1A	±1%	280mV	90%
ELP-75-48□	48V, 0~1.6A	±1%	300mV	90%

□= blank, -C ; blank: PCB type, -C: Enclosed type

Green Open Frame 100~400W Single Output

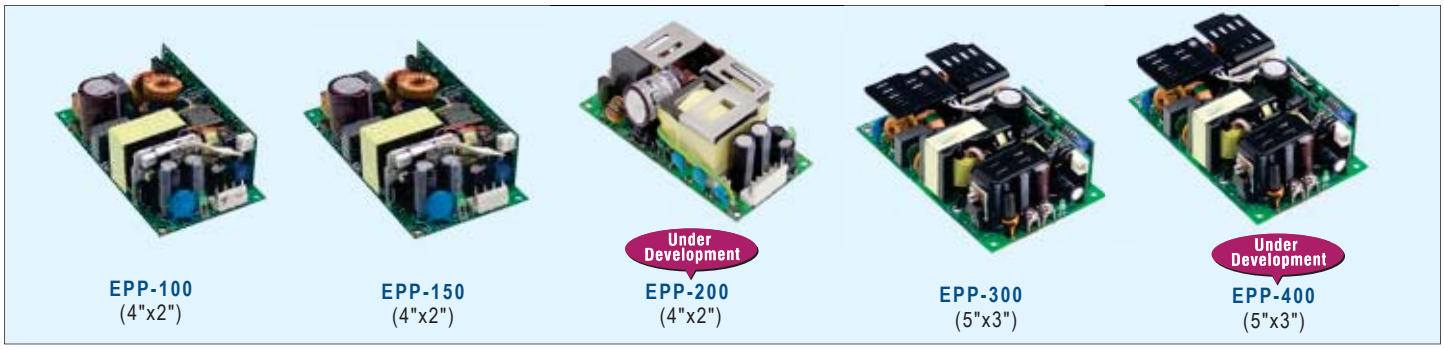

EPP-100 (4"x2") | EPP-150 (4"x2") | EPP-200 (4"x2") | EPP-300 (5"x3") | EPP-400 (5"x3")

Features

- Universal AC input / Full range
- Built-in active PFC function
- Class I or Class II installations
- No load power consumption <0.5W
- High efficiency up to 94%
- Protections: Short circuit / Overload / Over voltage / Over temperature
- Built-in 12V/0.5A auxiliary output (12V/0.3A for EPP-100/150)
- Standby 5V@1A with fan, @ 0.6A without fan (EPP-300/400)
- Built-in remote sense function (EPP-300/400)
- LED indicator for power on
- 3 years warranty

General Specification (Please refer to www.meanwell.com for detail spec.)

Model No.		EPP-100	EPP-150	EPP-200	EPP-300	EPP-400
Rated Power	Fan	100W (20CFM)	150W (20CFM)	200W (20.5CFM)	300W (20.5CFM)	400W (25CFM)
	Convection	75W	100W	140W	200W	250W
AC input voltage range		90~264VAC		80~264VAC	90~264VAC	80~264VAC
DC adjustment range		-2%~+5% rated output voltage		±5% rated output voltage		
Overload protection	Range	105%~145%		115%~150%	105%~135%	115%~135%
	Type	Hiccup mode, auto-recovery				
Over voltage protection	Range	115%~135% rated output voltage		110%~130%	115%~135%	110%~130%
	Type	Shut down o/p voltage, re-power on to recover				
Withstand voltage		I/P-O/P: 3kVAC, I/P-FG:2kVAC, O/P-FG: 0.5kVAC				I/P-O/P: 4kVAC, I/P-FG:2kVAC, O/P-FG: 1.5kVAC
Working temperature		-30~+70°C (refer to output derating curve)				
Safety standards		UL60950-1, TUV EN60950-1 approved (EPP-400 pending)				
EMC standards		EN55011 (EPP-300) / EN55022 class B, EN61000-3-2,3, EN61000-4-2,3,4,5,6,8,11 (EPP-400 pending)				
Connection		JST B3P / B4P-VH		JST B3P / B6P-VH	JST B5P-VH / Screw terminal	
Dimension (LxWxH)(mm)		101.6x 50.8x 29			127x 76.2x 35	

100W—Class I — EPP-100

Model No.	Output	Tol.	R&N	Effi.
EPP-100-12	12V, 0~8.5A	±2%	120mV	91.0%
EPP-100-15	15V, 0~6.67A	±2%	150mV	91.0%
EPP-100-24	24V, 0~4.2A	±1%	240mV	92.0%
EPP-100-27	27V, 0~3.71A	±1%	240mV	92.5%
EPP-100-48	48V, 0~2.1A	±1%	300mV	92.5%

150W—Class I — EPP-150

Model No.	Output	Tol.	R&N	Effi.
EPP-150-12	12V, 0~12.5A	±2%	130mV	91.5%
EPP-150-15	15V, 0~10.0A	±2%	150mV	92.0%
EPP-150-24	24V, 0~6.25A	±1%	240mV	93.0%
EPP-150-27	27V, 0~5.56A	±1%	240mV	92.0%
EPP-150-48	48V, 0~3.125A	±1%	300mV	92.0%

200W—Class I or II — Under Development — EPP-200

Model No.	Output	Tol.	R&N	Effi.
EPP-200-12	12V, 0~16.7A	±2%	100mV	92%
EPP-200-15	15V, 0~13.4A	±2%	100mV	92%
EPP-200-24	24V, 0~8.4A	±1%	150mV	93%
EPP-200-27	27V, 0~7.5A	±1%	150mV	93%
EPP-200-48	48V, 0~4.2A	±1%	200mV	94%

300W—Class I — EPP-300

Model No.	Output	Tol.	R&N	Effi.
EPP-300-12	12V, 0~25.0A	±3%	120mV	90.0%
EPP-300-15	15V, 0~20.0A	±3%	120mV	90.0%
EPP-300-24	24V, 0~12.5A	±2%	150mV	92.5%
EPP-300-27	27V, 0~11.12A	±2%	200mV	93.0%
EPP-300-48	48V, 0~6.25A	±2%	250mV	93.0%

400W—Class I — Under Development — EPP-400

Model No.	Output	Tol.	R&N	Effi.
EPP-400-12	12V, 0~33.3A	±3%	120mV	92%
EPP-400-15	15V, 0~26.7A	±3%	150mV	92%
EPP-400-24	24V, 0~16.7A	±2%	200mV	93%
EPP-400-27	27V, 0~14.9A	±1%	200mV	93%
EPP-400-48	48V, 0~8.4A	±1%	250mV	94%

Products —
- One Stop Shopping
- Total Solution

Customer Satisfaction —
Today's effort, tomorrow's reward. Continuously improve CQTS to satisfy customer is our goal.

Industrial Adaptor

12~30W Interchangeable Type

▲ GE12 70.7x 40x 38.8 mm ▲ GE18/24/30 81x 43x 40.5 mm

Features

- Interchangeable AC plugs (plug kit sold separately)
- Universal AC input / Full range
- No load power consumption <0.075W
- Energy efficiency Level VI
- Comply with EISA 2007/DoE and EU ErP
- Class II power (without earth pin)
- Protections: Short circuit / Over voltage / Overload
- Fully enclosed plastic case
- LED indicator for power on
- Pass LPS
- Approvals: UL / CUL / TUV / CCC / RCM / FCC / CE
- 2 years warranty

General Specification (Please refer to www.meanwell.com for detail spec.)

Model No.	GE12	GE18	GE24	GE30
AC input voltage range	90~264VAC / 0.4A for GE12; 90~264VAC / 0.7A for GE18/24/30			
AC inrush current (max.)	Cold start, 40A at 100VAC; 80A at 230VAC			
Overload protection	Hiccup mode, auto-recovery			
Over voltage protection	115%~135% rated output voltage			
Setup, rise, hold up time	4000ms, 100ms, 30ms at 230VAC input			
Withstand voltage	I/P-O/P:4242VDC, 1 minute			
Working temperature	-10~+50°C (refer to output derating curve)			
Safety standards	UL60950-1, CSA22.2, TUV EN60950-1, CCC GB4943, AS/NZS 60950.1 approved			
EMC standards	EN55022 class B, EN61000-3-2,3, EN61000-4-2,3,4,5,6,8,11, FCC part15 class B, GB9254			
Length of output cable	100cm of 16AWG for GE12 5~12V and GE18/24 5~9V ; 120cm of 18AWG for GE18 12V and GE30; 150cm of 18AWG for GE12/18 15~48V and GE24 12~48V			
Standard DC plug	P1J: 2.1øx5.5øx11mm / C+, tuning fork type (refer to page 61 for DC plug list)			

Wall-mounted (Interchangeable Type)—12W

Order No. (Main body)	Output	Tol.	R&N	Effi.
GE12I05-P1J	5V, 0~2.00A	±5%	50mV	80.0%
GE12I07-P1J	7.5V, 0~1.33A	±5%	75mV	82.0%
GE12I09-P1J	9V, 0~1.33A	±5%	100mV	84.0%
GE12I12-P1J	12V, 0~1.00A	±3%	120mV	84.0%
GE12I15-P1J	15V, 0~0.80A	±3%	150mV	85.0%
GE12I18-P1J	18V, 0~0.83A	±3%	180mV	85.0%
GE12I24-P1J	24V, 0~0.625A	±3%	240mV	85.5%

Wall-mounted (Interchangeable Type)—18W

Order No. (Main body)	Output	Tol.	R&N	Effi.
GE18I05-P1J	5V, 0~2.40A	±5%	50mV	80.5%
GE18I07-P1J	7.5V, 0~1.73A	±5%	75mV	82.5%
GE18I09-P1J	9V, 0~2.00A	±5%	100mV	85.0%
GE18I12-P1J	12V, 0~1.50A	±3%	120mV	86.0%
GE18I15-P1J	15V, 0~1.20A	±3%	150mV	86.5%
GE18I18-P1J	18V, 0~1.00A	±3%	180mV	87.0%
GE18I24-P1J	24V, 0~0.75A	±3%	240mV	87.0%
GE18I48-P1J	48V, 0~0.375A	±3%	300mV	87.0%

Wall-mounted (Interchangeable Type)—24W

Order No. (Main body)	Output	Tol.	R&N	Effi.
GE24I05-P1J	5V, 0~3.00A	±5%	50mV	81.0%
GE24I07-P1J	7.5V, 0~2.00A	±5%	75mV	83.0%
GE24I09-P1J	9V, 0~2.22A	±5%	100mV	85.5%
GE24I12-P1J	12V, 0~2.00A	±3%	120mV	86.0%
GE24I15-P1J	15V, 0~1.60A	±3%	150mV	86.0%
GE24I18-P1J	18V, 0~1.33A	±3%	180mV	87.0%
GE24I24-P1J	24V, 0~1.00A	±3%	240mV	87.5%
GE24I48-P1J	48V, 0~0.50A	±3%	300mV	89.0%

Wall-mounted (Interchangeable Type)—30W NEW

Order No. (Main body)	Output	Tol.	R&N	Effi.
GE30I12-P1J	12V, 0~2.50A	±3%	120mV	84%
GE30I15-P1J	15V, 0~2.00A	±3%	150mV	86%
GE30I18-P1J	18V, 0~1.66A	±3%	180mV	87%
GE30I24-P1J	24V, 0~1.25A	±3%	240mV	87%

Interchangeable AC Plug Specifically for GE12/18/24/30

AC Plug Type and Order No.				
AC Plug-AU	AC Plug-UK	AC Plug-EU	AC Plug-US	AC Plug-MIX
	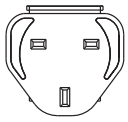	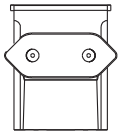	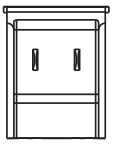	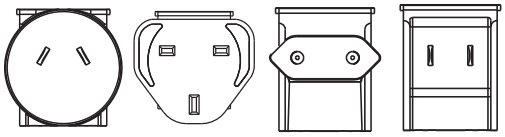
Australia Type	U.K. Type	European Type	U.S. Type	Mixed Four Type

▶ Note: Main body unit and AC plug should be ordered seperately; The main body needs to be used along with any of the AC plug.

Industrial Adaptor

5~15W Single Output

6W Green Adaptor

- Universal AC input / Full range
- No load power consumption < 0.075W
- Energy efficiency Level VI
- Comply with EISA 2007/DoE and EU ErP
- 2 pole US / European type plug
- Class II power (without earth pin)
- Protections: Short circuit / Overload / Over voltage
- Pass LPS
- Fully enclosed plastic case
- Approvals: UL/CUL/FCC for GS06U TUV/CE for GS06E
- 2 years warranty

GS06U
66x 32x 42.5 mm

GS06E
66x 32x 42.5 mm

AC input voltage range ....90~264VAC ; 127~370VDC
AC inrush current(max.) .. Cold start, 50A at 230VAC
Overload protection ..... Hiccup mode, auto-recovery
Over voltage protection ... Clamp by zener diode >120%
Withstand voltage ..... I/P-O/P: 4242VDC, 1minute
Working temperature .....0~+50°C (refer to output derating curve)
Safety standards .....UL60950-1, CSA 22.2, TUV EN60950-1
EMC standards .....FCC part15 class B(U Type); EN55022 class B(E Type)
Length of output cable .....120cm of 18AWG for 5~9V; 180cm of 24AWG for 12~48V

Order No.	Output	Tol.	R&N	Effi.
GS06☐-1P1J	5V, 0~1.00A	±5%	50mV	75.0%
GS06☐-11P1J	7.5V, 0~0.80A	±5%	80mV	80.5%
GS06☐-2P1J	9V, 0~0.66A	±5%	80mV	79.5%
GS06☐-3P1J	12V, 0~0.50A	±3%	100mV	79.5%
GS06☐-4P1J	15V, 0~0.40A	±3%	120mV	80.5%
GS06☐-5P1J	18V, 0~0.33A	±3%	150mV	81.5%
GS06☐-6P1J	24V, 0~0.25A	±2%	180mV	82.0%
GS06☐-8P1J	48V, 0~0.125A	±2%	200mV	85.0%

☐ = U/E ; U: American 2P, E: European 2P

12W Green Adaptor

- Universal AC input / Full range
- No load power consumption < 0.3W
- Energy efficiency Level V
- Comply with EISA 2007 and EU ErP
- 2 pole US / European type plug
- Class II power (without earth pin)
- Protections: Short circuit / Overload / Over voltage / Over temp.
- Pass LPS
- Fully enclosed plastic case
- Approvals: UL/CUL/BSMI/CB/FCC for GS12U TUV/CB/CE for GS12E
- 2 years warranty

GS12U
65x 47x 26.5 mm

GS12E
65x 47x 26.5 mm

AC input voltage range .... 90~264VAC ; 127~370VDC
AC inrush current(max.) .. Cold start, 45A at 230VAC
Overload protection ..... Hiccup mode, auto-recovery
Over voltage protection ... 115%~135% clamp by zener diode
Withstand voltage ..... I/P-O/P: 3kVAC, 1minute
Working temperature ..... 0~+50°C (refer to output derating curve)
Safety standards ..... UL60950-1, CSA 22.2, BSMI CNS14336, TUV EN60950-1
EMC standards ..... EN55022, EN61204-3, EN61000-3-2,3, EN61000-4-2,3,4,5,6,8,11, FCC part15 class B

Order No.	Output	Tol.	R&N	Effi.
GS12☐05-P1I	5V, 0~2.00A	±5%	75mV	76.0%
GS12☐07-P1I	7.5V, 0~1.60A	±4%	90mV	78.5%
GS12☐09-P1I	9V, 0~1.33A	±4%	90mV	78.5%
GS12☐12-P1I	12V, 0~1.00A	±3%	120mV	78.5%
GS12☐15-P1I	15V, 0~0.80A	±3%	150mV	80.0%
GS12☐18-P1I	18V, 0~0.67A	±3%	180mV	80.0%
GS12☐24-P1I	24V, 0~0.50A	±3%	200mV	80.5%

☐ = U/E ; U: American 2P, E: European 2P

5W Green USB Adaptor

GS05U-USB
41.86x 32.76x 23.8 mm

GS05E-USB
41.54x 30.5x 20 mm

- Universal AC input / Full range
- No load power consumption < 0.075W
- Energy efficiency Level VI
- Comply with EISA 2007/DoE and EU ErP
- Compact size
- 2 pole US / European type plug
- Class II power (without earth pin)
- Protections: Short circuit / Overload Over voltage / Over temp.
- Pass LPS
- Fully enclosed plastic case
- 2 years warranty

AC input voltage range ..... 90~264VAC ; 127~370VDC
Overload protection ..... 105%~135% rated output power, hiccup mode, auto-recovery
Over voltage protection ..... 105%~200% rated output voltage, hiccup mode, auto-recovery
Withstand voltage ..... I/P-O/P: 4242VDC, 1 minute
Working temperature ..... -20~+50°C (refer to output derating curve)
Safety standards ..... U-Type: UL60950-1, CSA22.2 approved E-Type: TUV EN60950-1 approved
EMC standards ..... FCC part15 class B(U Type); EN55022 class B(E Type)
Standard DC plug ..... USB Type A

Order No.	Output	Tol.	R&N	Effi.
GS05U-USB	5V, 0~1A	±4%	90mV	74.0%
GS05E-USB	5V, 0~1A	±4%	80mV	74.5%

15W Green Adaptor

- Universal AC input / Full range
- No load power consumption < 0.075W
- Energy efficiency Level VI
- Comply with EISA 2007/DoE and EU ErP
- Protections: Short circuit / Overload / Over voltage
- Pass LPS
- Fully enclosed plastic case
- 2 years warranty

GS15A
100x 58.5x 32.8 mm

GS15B
100x 58.5x 32.8 mm

GS15U
71x 34x 50 mm

GS15E
71x 34x 50 mm

AC input voltage range ..... 90~264VAC ; 127~370VDC
AC inrush current(max.) .... Cold start, 50A at 230VAC
Overload protection ..... Hiccup mode, auto-recovery
Over voltage protection ..... Clamp by zener diode > 120%
Withstand voltage ..... I/P-O/P: 3kVAC, I/P-FG: 1.5kVAC, 1 minute
Working temperature ..... 0~+50°C (refer to output derating curve)
Safety standards ..... UL60950-1, CSA 22.2, TUV EN60950-1 approved
EMC standards ..... EN55022-B, EN61000-3-2,3, EN61000-4-2,3,4,5,6,11,FCC part 15 class B
Length of output cable ..... 120cm of 18AWG for 5~15V; 180cm of 18AWG for 18~48V
Standard DC plug ..... P1J: 2.1øx5.5øx11mm / C+, tuning fork type (refer to page 61 for DC plug list)

Order No.	Output	Tol.	R&N	Effi.
GS15☐-1P1J	5.0V, 0~2.40A	±5%	50mV	80.0%
GS15☐-11P1J	7.5V, 0~1.60A	±5%	80mV	82.5%
GS15☐-2P1J	9.0V, 0~1.66A	±5%	80mV	85.0%
GS15☐-3P1J	12V, 0~1.25A	±3%	80mV	85.0%
GS15☐-4P1J	15V, 0~1.00A	±3%	100mV	85.0%
GS15☐-5P1J	18V, 0~0.83A	±3%	120mV	85.0%
GS15☐-6P1J	24V, 0~0.625A	±2%	150mV	85.5%
GS15☐-8P1J	48V, 0~0.31A	±2%	240mV	87.0%

☐ = A/B/E/U ; A:IEC320-C14, B: IEC320-C8
E: European 2P, U: American 2P

Industrial Adaptor

18~36W Single Output

GS18/25A
93x 54x 36 mm

GS18/25B
79x 54x 33 mm

GS18/25/36U
79x 54x 33 mm

GS18/25/36E
79x 54x 33 mm

Features

- Universal AC input / Full range
- No load power consumption < 0.3W
- Energy efficiency Level V
- Comply with EISA 2007, NRCan, AU/NZ MEPS and EU ErP
- 2 pole USA / EURO plug or IEC320-C14/C8
- Class II power (without earth pin) for B/U/E type
  Class I power (with earth pin) only for A type
- Protections: Short circuit / Overload / Over voltage
- Fully enclosed plastic case
- LED indicator for power on (except for GS36)
- Pass LPS
- Approvals:
  A type: UL / CUL / TUV / BSMI / CCC / PSE / CB / FCC / CE
  B type: UL / CUL / TUV / BSMI / CCC / CB / FCC / CE
  U type: UL / CUL / BSMI / CB / FCC
  E type: TUV / CB / CE
- 2 years warranty

General Specification (Please refer to www.meanwell.com for detail spec.)

Order No.		GS18	GS25	GS36
AC input voltage range		90~264VAC ; 135~370VDC		
AC inrush current (max.)		Cold start, 45A at 230VAC		Cold start, 60A at 230VAC
Overload protection	Range	105%~150% rated output power		110%~250% rated output power
	Type	Hiccup mode, auto-recovery		
Over voltage protection		105%~135% rated output voltage, clamp by zener diode		
Withstand voltage		I/P-O/P: 4242VDC, 1 minute		
Working temperature		0~+50°C (refer to output derating curve)		-20~+50°C (refer to output derating curve)
Safety standards		A-Type: UL60950-1, CSA 22.2, TUV EN60950-1, BSMI CNS14336, PSE J60950-1(GS18A/GS25A-5V~28V only), CCC GB4943 approved B-Type: UL60950-1, CSA 22.2, TUV EN60950-1, BSMI CNS14336, CCC GB4943 approved U-Type: UL60950-1, CSA22.2, BSMI CNS14336 approved E-Type: TUV EN60950-1 approved		
EMC standards		EN55022 class B, EN61000-3-2,3, EN61000-4-2,3,4,5,6,8,11(A/B/E type); FCC part 15 class B, CNS13438(A/B/U type); GB9254(A/B type)		
Length of output cable		120cm of 16AWG for 5~12V ; 180cm of UL1185, 18AWG for 15~48V		100cm of UL1185, 16AWG
Standard DC plug (refer to page 61 for DC plug list)		P1J: 2.1øx5.5øx11mm / C+, tuning fork type		

Desktop / Wall-mounted — 18W

Order No.	Output	Tol.	R&N	Effi.
GS18☐05-P1J	5V, 0~3.00A	±5%	50mV	79.5%
GS18☐07-P1J	7.5V, 0~2.00A	±5%	80mV	82.0%
GS18☐09-P1J	9V, 0~2.00A	±5%	80mV	83.0%
GS18☐12-P1J	12V, 0~1.50A	±3%	80mV	85.0%
GS18☐15-P1J	15V, 0~1.20A	±3%	100mV	85.0%
GS18☐18-P1J	18V, 0~1.00A	±3%	150mV	85.0%

Order No.	Output	Tol.	R&N	Effi.
GS18☐24-P1J	24V, 0~0.75A	±2%	180mV	86.0%
GS18☐28-P1J	28V, 0~0.64A	±2%	240mV	86.5%
GS18☐48-P1J	48V, 0~0.375A	±2%	240mV	87.0%

☐=A / B / U / E
Class I — A: IEC320-C14
Class II — B: IEC320-C8, U: American 2P, E: European 2P

Desktop / Wall-mounted — 25W

Order No.	Output	Tol.	R&N	Effi.
GS25☐05-P1J	5V, 0~4.00A	±5%	50mV	78.5%
GS25☐07-P1J	7.5V, 0~2.93A	±5%	80mV	81.5%
GS25☐09-P1J	9V, 0~2.77A	±5%	80mV	82.5%
GS25☐12-P1J	12V, 0~2.08A	±3%	80mV	84.5%
GS25☐15-P1J	15V, 0~1.66A	±3%	100mV	84.5%
GS25☐18-P1J	18V, 0~1.38A	±3%	150mV	84.5%

Order No.	Output	Tol.	R&N	Effi.
GS25☐24-P1J	24V, 0~1.04A	±2%	180mV	85.5%
GS25☐28-P1J	28V, 0~0.89A	±2%	240mV	85.5%
GS25☐48-P1J	48V, 0~0.52A	±2%	240mV	87.0%

☐=A / B / U / E
Class I — A: IEC320-C14
Class II — B: IEC320-C8, U: American 2P, E: European 2P

Wall-mounted — 36W

Order No.	Output	Tol.	R&N	Effi.
GS36☐05-P1J	5V, 0~4.50A	±5%	90mV	76.5%
GS36☐09-P1J	9V, 0~3.50A	±5%	90mV	81.5%
GS36☐12-P1J	12V, 0~3.00A	±3%	100mV	84.5%

Order No.	Output	Tol.	R&N	Effi.
GS36☐24-P1J	24V, 0~1.50A	±2%	180mV	85.5%
GS36☐48-P1J	48V, 0~0.75A	±2%	240mV	87.5%

☐=U / E ; U: American 2P, E: European 2P

Industrial Adaptor

40~120W Single Output

Features

- Universal AC input / Full range
- No load power consumption <0.3W for GS40/60; <0.5W for GS90/120
- Energy efficiency Level V
- Comply with EISA 2007, NRCan, AU/NZ MEPS and EU ErP
- Built-in active PFC function for GS90/120
- 3 pole AC inlet IEC320-C14
- Class I power (with earth pin)
- Protections: Short circuit / Over voltage / Overload / Over temp. (except for GS40)
- Fully enclosed plastic case
- LED indicator for power on
- Pass LPS (except for GS120)
- 2 years warranty

General Specification (Please refer to www.meanwell.com for detail spec.)

(except for 48V)

Order No.		GS40A	GS60A	GS90A	GS120A
AC input voltage range		90~264VAC ; 127~370VDC			85~264VAC ; 120~370VDC
AC inrush current (max.)		Cold start, 65A at 230VAC		Cold start, 70A at 230VAC	
Overload protection	Range	105%~150% rated output power		110%~150%	105%~160%
	Type	Hiccup mode, auto-recovery			
Over voltage protection		105%~135% rated output voltage			
Setup, rise, hold up time		1000ms, 30ms, 50ms at 230VAC input		1000ms, 20ms, 20ms at 230VAC input	2000ms, 30ms, 20ms at 230VAC input
Withstand voltage		I/P-O/P:3kVAC, I/P-FG: 2kVAC, O/P-FG: 0.5kVAC			I/P-FG: 3kVAC
Working temperature		-30~+60°C		-30~+50°C	-30~+70°C
Safety standards		UL60950-1, TUV EN60950-1, BSMI CNS14336, CCC GB4943, PSE J60950-1(except for 48V) approved			
EMC standards		EN55022 class B, EN61000-3-2,3, EN61000-4-2,3,4,5,6,8,11, CNS13438, GB9254, FCC part15 class B			
Length of output cable		GS40: 100cm of UL1185, 16AWG for 5~15V; 180cm of UL1185, 18AWG for 18~48V GS60: 100cm of UL2464, 16AWG for 5~9V; 100cm of UL1185, 16AWG for 12~15V; 180cm of UL1185, 18AWG for 18~48V		100cm of UL1185, 14AWG for 12~15V; 120cm of UL1185, 16AWG for 19~48V	120cm of UL2464, 18AWGx4C
Standard DC plug (refer to page 61 for DC plug list)		P1J: 2.1øx5.5øx11mm / C+, tuning fork type		P1M: 2.5øx5.5øx11mm / C+, tuning fork type	R7B: Power DIN 4P with lock type P1M: 2.5øx5.5øx11mm/C+, tuning fork type (20~48V only)

Desktop (IEC 320-C14 / Class I) — 40W

Order No.	Output	Tol.	R&N	Effi.
GS40A05-P1J	5V, 0~5.00A	±5%	100mV	80.5%
GS40A07-P1J	7.5V, 0~5.34A	±5%	100mV	85.5%
GS40A09-P1J	9V, 0~4.45A	±5%	100mV	85.0%
GS40A12-P1J	12V, 0~3.34A	±3%	100mV	89.0%
GS40A15-P1J	15V, 0~2.67A	±3%	100mV	89.5%
GS40A18-P1J	18V, 0~2.22A	±3%	150mV	90.0%
GS40A24-P1J	24V, 0~1.67A	±2.5%	180mV	91.0%
GS40A48-P1J	48V, 0~0.84A	±2.5%	240mV	92.0%

Desktop (IEC 320-C14 / Class I) — 60W

Order No.	Output	Tol.	R&N	Effi.
GS60A05-P1J	5V, 0~6.00A	±5%	100mV	81.0%
GS60A07-P1J	7.5V, 0~6.00A	±5%	100mV	85.5%
GS60A09-P1J	9V, 0~6.00A	±5%	100mV	87.5%
GS60A12-P1J	12V, 0~5.00A	±3%	100mV	88.0%
GS60A15-P1J	15V, 0~4.00A	±3%	100mV	88.5%
GS60A18-P1J	18V, 0~3.33A	±3%	150mV	88.5%
GS60A24-P1J	24V, 0~2.50A	±3%	180mV	90.0%
GS60A48-P1J	48V, 0~1.25A	±2.5%	240mV	92.0%

Desktop (IEC 320-C14 / Class I) — 90W

Order No.	Output	Tol.	R&N	Effi.
GS90A12-P1M	12V, 0~6.67A	±5%	80mV	88.0%
GS90A15-P1M	15V, 0~6.00A	±5%	100mV	89.0%
GS90A19-P1M	19V, 0~4.74A	±4%	150mV	89.0%
GS90A24-P1M	24V, 0~3.75A	±3%	180mV	89.5%
GS90A48-P1M	48V, 0~1.87A	±2%	240mV	91.0%

Desktop (IEC 320-C14 / Class I) — 120W

Order No.	Output	Tol.	R&N	Effi.
GS120A12-R7B	12V, 0~8.5A	±5%	80mV	87.5%
GS120A15-R7B	15V, 0~7.0A	±5%	120mV	89.0%
GS120A20-☐	20V, 0~6.0A	±5%	150mV	89.0%
GS120A24-☐	24V, 0~5.0A	±3%	180mV	90.0%
GS120A48-☐	48V, 0~2.5A	±2%	240mV	91.0%

☐= P1M / R7B

Industrial Adaptor 160~280W Single Output

GS160A
175x 72x 35 mm

GS220A
210x 85x 46 mm

GS280A
220x 95x 46 mm

Features

- Universal AC input / Full range
- No load power consumption<0.5W
- Energy efficiency Level V
- Comply with EISA 2007, NRCan, AU/NZ MEPS and EU ErP
- Built-in active PFC function
- 3 pole AC inlet IEC320-C14
- Class I power (with earth pin)
- Fanless design, high operating temperature up to +70°C
- Protections: Short circuit / Overload / Over voltage / Over temperature
- Fully enclosed plastic case
- LED indicator for power on
- 2 years warranty

General Specification (Please refer to www.meanwell.com for detail spec.)

(except for GS280-20/24/48V) (except for 48V)

Order No.		GS160A	GS220A	GS280A
AC input voltage range		85~264VAC ; 120~370VDC	90~264VAC ; 127~370VDC	
AC inrush current (max.)		Cold start, 120A at 230VAC		
Overload protection	Range	105%~135% rated output power		
	Type	Hiccup mode, auto-recovery		
Over voltage protection	Range	105%~135% rated output power		
	Type	Shut down o/p voltage, re-power on to recover		
Hold up time		20ms at full load		16ms at full load
Withstand voltage		I/P-O/P: 3kVAC, 1 minute		
Working temperature		-30~+70°C	-30~+60°C (refer to output derating curve)	
Safety standards		UL60950-1, TUV EN60950-1, BSMI CNS14336, CCC GB4943, PSE J60950-1(except for 48V) approved		
EMC standards		EN55022 class B, EN61000-3-2,3, EN61000-4-2,3,4,5,6,8,11, FCC part 15 class B, CNS13438, GB9254		
Length of output cable		120cm of UL2464, 18AWGx4C	100cm of UL2464, 16AWGx4C	
Standard DC plug (refer to page 61 for DC plug list)		R7B: Power DIN 4P with lock type		4P/6.35mm pitch, AMP 1-480702-0 (power supply side); AMP 1-480703-0(customer side, not provided with GS280)

Desktop (IEC320-C14/Class I) — 160W

Order No.	Output	Tol.	R&N	Effi.
GS160A12-R7B	12V, 0~11.5A	±5%	80mV	89.0%
GS160A15-R7B	15V, 0~9.6A	±5%	100mV	90.0%
GS160A20-R7B	20V, 0~8.0A	±4%	150mV	92.0%
GS160A24-R7B	24V, 0~6.67A	±3%	180mV	92.5%
GS160A48-R7B	48V, 0~3.34A	±3%	240mV	94.0%

Desktop (IEC320-C14/Class I) — 280W

Order No.	Output	Tol.	R&N	Effi.
GS280A12-C4P	12V, 0~18.5A	±5%	120mV	89.0%
GS280A15-C4P	15V, 0~16A	±5%	120mV	89.5%
GS280A20-C4P	20V, 0~13A	±4%	150mV	92.0%
GS280A24-C4P	24V, 0~11.67A	±3%	280mV	93.0%
GS280A48-C4P	48V, 0~5.84A	±2%	280mV	94.0%

Desktop (IEC320-C14/Class I) — 220W

Order No.	Output	Tol.	R&N	Effi.
GS220A12-R7B	12V, 0~15.0A	±5%	80mV	90.0%
GS220A15-R7B	15V, 0~13.4A	±5%	100mV	90.0%
GS220A20-R7B	20V, 0~11.0A	±4%	150mV	92.0%
GS220A24-R7B	24V, 0~9.20A	±3%	180mV	93.5%
GS220A48-R7B	48V, 0~4.60A	±2%	240mV	94.5%

Q.A.

Who can provide you better services and be a trustworthy partner in the power industry?
— "MEAN WELL" tries to be —

Best products also need best service.
We have authorized distributors all over the world. They have sufficient stock for your prompt delivery. Also they can offer you technical support & RMA services. Please contact your local distributors for more product information. You can also contact us at info@meanwell.com for information of your local distributors.

Industrial Adaptor

18~36W Single Output

Features

- Universal AC input / Full range
- No load power consumption < 0.075W
- Energy efficiency Level VI
- Comply with EISA 2007 / DoE, NRCan, AU/NZ MEPS, EU ErP and CoC Version 5
- 2 pole USA / EURO plug or IEC320-C14/C8
- Class II power (without earth pin) for B/U/E type
  Class I power (with earth pin) only for A type
- Protections: Short circuit / Overload / Over voltage
- Fully enclosed plastic case
- LED indicator for power on
- Pass LPS
- Approvals:
  A type: UL / CUL / TUV / BSMI / CCC / PSE / CB / FCC / CE
  B type: UL / CUL / TUV / BSMI / CCC / CB / FCC / CE
  U type: UL / CUL / BSMI / CB / FCC
  E type: TUV / CB / CE
- 3 years warranty

General Specification (Please refer to www.meanwell.com for detail spec.)

Order No.		GST18	GST25	GST36
AC input voltage range		85~264VAC		
AC inrush current (max.)		Cold start, 70A at 230VAC		
Overload protection	Range	110%~150% rated output power		110%~250% rated output power
	Type	Hiccup mode, auto-recovery		
Over voltage protection		110%~140% rated output voltage, clamp by zener diode		
Withstand voltage		I/P-O/P: 4242VDC, 1 minute		
Working temperature		-30~+70°C (refer to output derating curve)		
Safety standards		A-Type: UL60950-1, CSA 22.2, TUV EN60950-1, BSMI CNS14336, PSE J60950-1, CCC GB4943 approved B-Type: UL60950-1, CSA 22.2, TUV EN60950-1, BSMI CNS14336, CCC GB4943 approved U-Type: UL60950-1, CSA22.2, BSMI CNS14336 approved E-Type: TUV EN60950-1 approved		
EMC standards		EN55022 class B, EN61000-3-2,3, EN61000-4-2,3,4,5,6,8,11(A/B/E type); FCC part 15 class B, CNS13438 class B(A/B/U type); GB9254(A/B type)		
Length of output cable		120cm of UL1185, 16AWG for 5~12V ; 180cm of UL1185, 18AWG for 15~48V	100cm of UL2468, 16AWG for 5~12V; 180cm of UL1185, 18AWG for 15~48V	100cm of UL2468, 16AWG
Standard DC plug		P1J: 2.1øx5.5øx11mm / C+, tuning fork type (refer to page 61 for DC plug list)		

Desktop / Wall-mounted — 18W

Order No.	Output	Tol.	R&N	Effi.
GST18☐05-P1J	5V, 0~3.00A	±5%	80mV	81.0%
GST18☐07-P1J	7.5V, 0~2.00A	±5%	80mV	85.0%
GST18☐09-P1J	9V, 0~2.00A	±5%	80mV	85.0%
GST18☐12-P1J	12V, 0~1.50A	±3%	80mV	86.0%
GST18☐15-P1J	15V, 0~1.20A	±3%	100mV	87.0%
GST18☐18-P1J	18V, 0~1.00A	±3%	150mV	88.0%

Order No.	Output	Tol.	R&N	Effi.
GST18☐24-P1J	24V, 0~0.75A	±2%	180mV	88.0%
GST18☐28-P1J	28V, 0~0.64A	±2%	240mV	88.5%
GST18☐48-P1J	48V, 0~0.375A	±2%	240mV	89.0%

☐=A / B / U / E
Class I — A: IEC320-C14
Class II — B: IEC320-C8, U: American 2P, E: European 2P

Desktop / Wall-mounted — 25W

Order No.	Output	Tol.	R&N	Effi.
GST25☐05-P1J	5V, 0~4.00A	±5%	80mV	81.5%
GST25☐07-P1J	7.5V, 0~2.93A	±5%	80mV	84.5%
GST25☐09-P1J	9V, 0~2.55A	±5%	80mV	85.0%
GST25☐12-P1J	12V, 0~2.08A	±3%	80mV	86.5%
GST25☐15-P1J	15V, 0~1.66A	±3%	100mV	87.0%
GST25☐18-P1J	18V, 0~1.38A	±3%	150mV	87.0%

Order No.	Output	Tol.	R&N	Effi.
GST25☐24-P1J	24V, 0~1.04A	±2%	180mV	88.0%
GST25☐28-P1J	28V, 0~0.89A	±2%	240mV	88.0%
GST25☐48-P1J	48V, 0~0.52A	±2%	240mV	89.0%

☐=A / B / U / E
Class I — A: IEC320-C14
Class II — B: IEC320-C8, U: American 2P, E: European 2P

Wall-mounted — 36W

Order No.	Output	Tol.	R&N	Effi.
GST36☐05-P1J	5V, 0~4.30A	±5%	90mV	82.0%
GST36☐09-P1J	9V, 0~3.11A	±5%	90mV	86.0%
GST36☐12-P1J	12V, 0~3.00A	±3%	100mV	87.5%

Order No.	Output	Tol.	R&N	Effi.
GST36☐24-P1J	24V, 0~1.50A	±2%	180mV	88.5%
GST36☐48-P1J	48V, 0~0.75A	±2%	240mV	90.0%

☐=B / U / E ; B: IEC320-C8; U: American 2P, E: European 2P

Industrial Adaptor

40~120W Single Output

Features

- Universal AC input / Full range
- No load power consumption <0.075W for GST40A/60A; <0.15W for GST90A/120A
- Energy efficiency Level VI
- Comply with EISA 2007 / DoE, NRCan, AU/NZ MEPS, EU ErP and CoC Version 5
- Built-in active PFC function for GST90A/120A
- 3 pole AC inlet IEC320-C14
- Class I power (with earth pin)
- Protections: Short circuit / Over voltage / Overload / Over temp. (except for GST40A)
- Fully enclosed plastic case
- LED indicator for power on
- Pass LPS (except for GST90A/120A)
- 3 years warranty

General Specification (Please refer to www.meanwell.com for detail spec.)

(GST90A/120A only)

Order No.		GST40A	GST60A	GST90A	GST120A
AC input voltage range		90~264VAC; 127~370VDC			85~264VAC; 120~370VDC
AC inrush current (max.)		Cold start, 65A at 230VAC		Cold start, 70A at 230VAC	
Overload protection	Range	105%~150% rated output power		110%~150%	105%~160%
	Type	Hiccup mode, auto-recovery			
Over voltage protection		105%~135% rated output voltage			
Setup, rise, hold up time		1000ms, 50ms, 50ms at 230VAC input		1000ms, 20ms, 20ms at 230VAC input	2000ms, 30ms, 20ms at 230VAC input
Withstand voltage		I/P-O/P:3kVAC, I/P-FG: 2kVAC, O/P-FG: 0.5kVAC			I/P-FG: 3kVAC
Working temperature		-30~+70°C			
Safety standards		UL60950-1, TUV EN60950-1, BSMI CNS14336, CCC GB4943, PSE J60950-1 approved			
EMC standards		EN55022 class B, EN61000-3-2,3, EN61000-4-2,3,4,5,6,8,11, CNS13438, GB9254, FCC part15 class B			
Length of output cable		GST40A: 100cm of UL1185, 16AWG for 5~15V; 180cm of UL1185, 18AWG for 18~48V GST60A: 100cm of UL2464, 16AWG for 5~9V; 100cm of UL1185, 16AWG for 12~15V; 150cm of UL1185, 16AWG for 18V; 180cm of UL1185, 18AWG for 24~48V		100cm of UL1185, 14AWG for 12~15V; 120cm of UL1185, 16AWG for 19~48V	100cm of UL2464, 16AWGx4C for 12V 120cm of UL2464, 18AWGx4C for 15~48V
Standard DC plug (refer to page 61 for DC plug list)		P1J: 2.1øx5.5øx11mm / C+, tuning fork type		P1M: 2.5øx5.5øx11mm / C+, tuning fork type	R7B: Power DIN 4P with lock type P1M: 2.5øx5.5øx11mm/C+, tuning fork type (20~48V only)

Desktop (IEC 320-C14 / Class I) — 40W

Order No.	Output	Tol.	R&N	Effi.
GST40A05-P1J	5V, 0~5.00A	±5%	150mV	84.5%
GST40A07-P1J	7.5V, 0~5.34A	±5%	150mV	87.5%
GST40A09-P1J	9V, 0~4.45A	±5%	150mV	88.5%
GST40A12-P1J	12V, 0~3.34A	±3%	150mV	89.5%
GST40A15-P1J	15V, 0~2.67A	±3%	150mV	90.0%
GST40A18-P1J	18V, 0~2.22A	±3%	150mV	90.0%
GST40A24-P1J	24V, 0~1.67A	±2.5%	180mV	91.0%
GST40A48-P1J	48V, 0~0.84A	±2.5%	240mV	92.0%

Desktop (IEC 320-C14 / Class I) — 60W

Order No.	Output	Tol.	R&N	Effi.
GST60A05-P1J	5V, 0~6.00A	±5%	150mV	85.5%
GST60A07-P1J	7.5V, 0~6.00A	±5%	150mV	88.5%
GST60A09-P1J	9V, 0~6.00A	±5%	150mV	89.0%
GST60A12-P1J	12V, 0~5.00A	±3%	150mV	89.5%
GST60A15-P1J	15V, 0~4.00A	±3%	150mV	89.5%
GST60A18-P1J	18V, 0~3.33A	±3%	150mV	89.5%
GST60A24-P1J	24V, 0~2.50A	±3%	180mV	90.5%
GST60A48-P1J	48V, 0~1.25A	±2.5%	240mV	92.0%

Desktop (IEC 320-C14 / Class I) — 90W

Order No.	Output	Tol.	R&N	Effi.
GST90A12-P1M	12V, 0~6.67A	±5%	120mV	89.0%
GST90A15-P1M	15V, 0~6.00A	±5%	150mV	89.5%
GST90A19-P1M	19V, 0~4.74A	±4%	180mV	90.0%
GST90A24-P1M	24V, 0~3.75A	±3%	200mV	90.0%
GST90A48-P1M	48V, 0~1.87A	±2.5%	240mV	91.0%

Desktop (IEC 320-C14 / Class I) — 120W

Order No.	Output	Tol.	R&N	Effi.
GST120A12-R7B	12V, 0~8.5A	±5%	120mV	88.5%
GST120A15-R7B	15V, 0~7.0A	±5%	150mV	89.0%
GST120A20-☐	20V, 0~6.0A	±5%	180mV	90.0%
GST120A24-☐	24V, 0~5.0A	±3%	200mV	90.5%
GST120A48-☐	48V, 0~2.5A	±2.5%	240mV	91.0%

☐= P1M / R7B

Industrial Adaptor

160~280W Single Output

Features

- Universal AC input / Full range
- No load power consumption<0.15W(GST280A <0.5W)
- Energy efficiency Level VI
- Comply with EISA 2007 / DoE, NRCan, AU/NZ MEPS, EU ErP and CoC Version 5
- Built-in active PFC function
- 3 pole AC inlet IEC320-C14
- Class I power (with earth pin)
- Fanless design, high operating temperature up to +70°C
- Protections: Short circuit / Overload / Over voltage / Over temperature
- Fully enclosed plastic case
- LED indicator for power on
- 3 years warranty

General Specification (Please refer to www.meanwell.com for detail spec.)

Order No.		GST160A	GST220A	GST280A
AC input voltage range		85~264VAC ; 120~370VDC		
AC inrush current (max.)		Cold start, 120A at 230VAC		
Overload protection	Range	105%~135% rated output power		
	Type	Hiccup mode, auto-recovery		
Over voltage protection	Range	105%~135% rated output power		
	Type	Shut down o/p voltage, re-power on to recover		
Hold up time		20ms at full load		16ms at full load
Withstand voltage		I/P-O/P: 3kVAC, 1 minute		
Working temperature		-30~+70°C (refer to output derating curve)		
Safety standards		UL60950-1, TUV EN60950-1, BSMI CNS14336, CCC GB4943, PSE J60950-1 approved		
EMC standards		EN55022 class B, EN61000-3-2,3, EN61000-4-2,3,4,5,6,8,11, FCC part 15 class B, CNS13438, GB9254, GB17625.1		
Length of output cable		100cm of UL2464, 18AWGx4C for 12V 120cm of UL2464, 18AWGx4C for 15~48V	100cm of UL2464, 16AWGx4C	
Standard DC plug (refer to page 61 for DC plug list)		R7B: Power DIN 4P with lock type		6P/4.2mm pitch, MOLEX 39-01-2060(power supply side); MOLEX 39-01-2061(customer side, not provided with GST280A)

Desktop (IEC320-C14/Class I) — 160W

Order No.	Output	Tol.	R&N	Effi.
GST160A12-R7B	12V, 0~11.5A	±5%	80mV	90.0%
GST160A15-R7B	15V, 0~9.6A	±5%	100mV	91.0%
GST160A20-R7B	20V, 0~8.0A	±4%	150mV	93.0%
GST160A24-R7B	24V, 0~6.67A	±3%	180mV	93.0%
GST160A48-R7B	48V, 0~3.34A	±3%	240mV	94.0%

Desktop (IEC320-C14/Class I) — 280W

Order No.	Output	Tol.	R&N	Effi.
GST280A12-C6P	12V, 0~21A	±5%	120mV	90.0%
GST280A15-C6P	15V, 0~17A	±5%	120mV	90.0%
GST280A20-C6P	20V, 0~13A	±4%	150mV	92.0%
GST280A24-C6P	24V, 0~11.67A	±3%	280mV	93.0%
GST280A48-C6P	48V, 0~5.84A	±2%	280mV	94.0%

Desktop (IEC320-C14/Class I) — 220W

Order No.	Output	Tol.	R&N	Effi.
GST220A12-R7B	12V, 0~15.0A	±5%	80mV	90.0%
GST220A15-R7B	15V, 0~13.4A	±5%	100mV	90.0%
GST220A20-R7B	20V, 0~11.0A	±4%	150mV	92.0%
GST220A24-R7B	24V, 0~9.20A	±3%	180mV	93.5%
GST220A48-R7B	48V, 0~4.60A	±2%	240mV	94.5%

Optonal Grayish Model

Optional grayish models (PANTONE Cool Gray 2C) are available for GST&GSM18/25/36 series. MOQ is 200pcs per model. Please contact MEAN WELL sales representatives for more details.

Industrial Adaptor

12~25W Slim Type

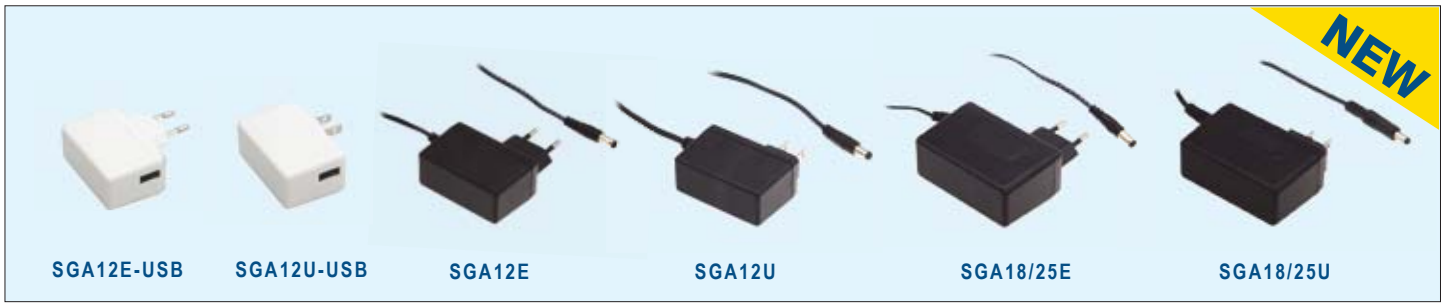

Features

- Universal AC input / Full range
- No load power consumption <0.075W
- Energy efficiency level VI
- Comply with EISA 2007/DoE, EU ErP
- 2 pole US/European type plug
- Class II (without earth Pin)
- Protections: Short citcuit / Over load / Over voltage
- Pass LPS
- Fully enclosed plastic case
- Approvals:
  U type: UL / CUL / CB / FCC; E type: TUV / CB / CE
- 3 years warranty

General Specification (Please refer to www.meanwell.com for detail spec.)

Model No.		SGA12	SGA18	SGA25
AC input voltage range		90~264VAC; 127~370VDC		
AC inrush current (max.)		Cold start, 45A at 230VAC	Cold start, 50A at 230VAC	Cold start, 60A at 230VAC
DC adjustment range		±10% rated output voltage		
Overload protection	Range	110%~250% rated output power		
	Type	Hiccup mode, auto recovery		
Over voltage protection	Range	110%~140% rated output voltage		
	Type	Clamp by Zener diode		
Setup, rise, hold up time		1300ms, 50ms, 16ms	300ms, 30ms, 16ms	300ms, 60ms, 18ms
Withstand voltage		I/P-O/P: 4242VDC		
Working temperature		-20~+60°C (refer to output derating curve)		
Safety standards		U-Type: UL60950-1, CSA22.2 approved; E-Type: TUV EN60950-1 approved		
EMC standards		U-Type: FCC part15 class B; E-Type: EN55022 class B		
Length of output cable		100cm of 18AWG for SGA12□05~07-P1J 120cm of 22AWG for SGA12□09-P1J 180cm of 24AWG for SGA12□12~48-P1J	100cm of 16AWG for 5~9V 100cm of 18AWG for 12V 150cm of 22AWG for 15~48V	100cm of 16AWG for 5~12V 180cm of 18AWG for 15~18V 180cm of 20AWG for 24~48V
Standard DC Plug (refer to page 61 for DC plug list)		USB: Type A; P1J: 2.1øx5.5øx11mm / C+, tuning fork type		
Dimension (LxWxH)(mm)		62.2x 27.4x 39.7	75.5x 32x 47.5	

Wall-mounted — 12W

Model No.	Output	Tol.	R&N	Effi.
SGA12□05-USB	5V, 2.40A	±5%	50mV	80.0%
SGA12□05-P1J	5V, 2.40A	±5%	50mV	80.0%
SGA12□07-P1J	7.5V, 1.60A	±5%	50mV	83.0%
SGA12□09-P1J	9V, 1.33A	±3%	80mV	83.0%
SGA12□12-P1J	12V, 1.00A	±3%	80mV	83.0%
SGA12□15-P1J	15V, 0.80A	±3%	80mV	84.5%
SGA12□18-P1J	18V, 0.666A	±3%	80mV	85.0%
SGA12□24-P1J	24V, 0.50A	±2%	100mV	86.0%
SGA12□48-P1J	48V, 0.25A	±2%	100mV	88.0%

□ = U/E; U: American 2P, E: European 2P

Wall-mounted — 18W

Model No.	Output	Tol.	R&N	Effi.
SGA18□05-P1J	5V, 3.00A	±5%	80mV	80.5%
SGA18□09-P1J	9V, 2.00A	±5%	80mV	84.5%
SGA18□12-P1J	12V, 1.50A	±3%	80mV	84.0%
SGA18□15-P1J	15V, 1.20A	±3%	80mV	84.0%
SGA18□18-P1J	18V, 1.00A	±3%	80mV	84.5%
SGA18□24-P1J	24V, 0.75A	±2%	80mV	85.0%
SGA18□48-P1J	48V, 0.375A	±2%	120mV	86.0%

□ = U/E; U: American 2P, E: European 2P

Wall-mounted — 25W

Model No.	Output	Tol.	R&N	Effi.
SGA25□05-P1J	5V, 4.00A	±5%	80mV	82.0%
SGA25□07-P1J	7.5V, 2.93A	±5%	80mV	85.5%
SGA25□09-P1J	9V, 2.77A	±5%	80mV	86.0%
SGA25□12-P1J	12V, 2.08A	±3%	80mV	86.0%
SGA25□15-P1J	15V, 1.66A	±3%	80mV	86.5%
SGA25□18-P1J	18V, 1.38A	±3%	80mV	86.5%
SGA25□24-P1J	24V, 1.04A	±2%	80mV	87.0%
SGA25□48-P1J	48V, 0.52A	±2%	120mV	88.5%

□ = U/E; U: American 2P, E: European 2P

Industrial Adaptor

25~60W Single and Triple Output

MEAN WELL

40W&60W Slim Wall-mounted Green Adaptor

- Universal AC input / Full range
- No load power consumption <0.075W for SGA40 and SGA60 5~7.5V; <0.15W for SGA60 9~48V
- Energy efficiency Level VI
- Comply with EISA 2007/DoE, EU ErP
- 2 pole US/European type plug
- Class II power (without earth pin)
- Protections: Short circuit / Overload / Over voltage
- Pass LPS
- Fully enclosed plastic case
- LED indicator for power on (60W only)
- 3 year warranty

AC input voltage range ..... 90~264VAC ; 127~370VDC
AC inrush current(max.) .... Cold start, 70A at 230VAC(40W); 80A at 230VAC(60W)
Overload protection ..... Hiccup mode, auto-recovery
Over voltage protection ..... 110%~140% clamp by Zener diode
Setup, rise, hold up time ... 40W: 500ms, 100ms, 12ms at full load
60W: 500ms, 50ms, 12ms at full load
Withstand voltage ..... I/P-O/P:4242VDC, 1 minute
Working temperature ..... -20~+50°C (refer to output derating curve)
Safety standards ..... U-Type: UL60950-1, CSA 22.2 approved
E-Type: TUV EN60950-1 approved
EMC standards ..... U-Type: FCC part15 Class B
E-Type: EN55022 Class B
Length of output cable ..... 100cm of 14AWG for SGA40 5V and SGA60 5~9V
100cm of 16AWG for SGA40 9~15V and SGA60 12~18V
150cm of 18AWG for SGA60 24~48V
150cm of 20AWG for SGA40 18~48V
Standard DC plug ..... P1J: 2.1øx5.5øx11mm/C+, turning fork type (refer to page 61 for DC plug list)

❖ 40W

Order No.	Output	Tol.	R&N	Effi.
SGA40☐05-P1J	5V, 0~5.00A	±5%	120mV	84.0%
SGA40☐09-P1J	9V, 0~4.44A	±5%	120mV	87.0%
SGA40☐12-P1J	12V, 0~3.33A	±3%	120mV	86.5%
SGA40☐15-P1J	15V, 0~2.66A	±2%	120mV	86.5%
SGA40☐18-P1J	18V, 0~2.22A	±2%	120mV	87.0%
SGA40☐24-P1J	24V, 0~1.67A	±2%	150mV	88.0%
SGA40☐48-P1J	48V, 0~0.84A	±2%	150mV	89.0%

☐ =U / E, U: American 2P, E: European 2P

❖ 60W

Order No.	Output	Tol.	R&N	Effi.
SGA60☐05-P1J	5V, 0~6.00A	±5%	80mV	84%
SGA60☐07-P1J	7.5V, 0~6.00A	±5%	80mV	86%
SGA60☐09-P1J	9V, 0~5.50A	±5%	80mV	87%
SGA60☐12-P1J	12V, 0~5.00A	±3%	80mV	88%
SGA60☐15-P1J	15V, 0~4.00A	±3%	80mV	87%
SGA60☐18-P1J	18V, 0~3.33A	±2%	80mV	88%
SGA60☐24-P1J	24V, 0~2.50A	±2%	100mV	88%
SGA60☐48-P1J	48V, 0~1.25A	±2%	120mV	91%

☐ =U / E, U: American 2P, E: European 2P

25W AC-DC Triple Output

- Universal AC input / Full range
- Protections: Short circuit / Overload / Over voltage / Over temp.
- Fully enclosed plastic case
- LED indicator for power on
- 1 year warranty

AC input voltage range ..... 90~264VAC ; 135~370VDC
AC inrush current(max.) .... Cold start, 60A at 230VAC
Overload protection ..... Hiccup mode, auto-recovery
Over voltage protection ..... 110%~140% of +5V output
Setup, rise, hold up time ... 200ms, 50ms, 16ms at full load
Withstand voltage ..... I/P-O/P:3kVAC, I/P-FG:1.5kVAC , 1 minute
Working temperature ..... 0~+40°C (refer to output derating curve)
Safety standards ..... UL1950, CSA 22.2, TUV EN60950-1 approved
EMC standards ..... EN55022 class B, EN61000-3-2,3, EN61000-4-2,3,4,5,6,11
Length of output cable ..... 150cm of UL2464
Standard DC plug ..... R1B: DIN 5P

❖ 25W — Triple output (IEC 320-C14 / Class I)

Order No.	Output	Tol.	R&N	Effi.	Max.
P25A13A-R1B	5V, 0.5~2.5A	±5%	50mV	70%	25W
	12V, 0.1~0.8A	±5%	100mV		
	-5V, 0.1~0.3A	±3%	100mV		
P25A13D-R1B	5V, 0.5~2.5A	±5%	50mV	72%	25W
	12V, 0.1~0.8A	±5%	100mV		
	-12V, 0.1~0.3A	±3%	100mV		
P25A14E-R1B	5V, 0.5~2.5A	±5%	50mV	74%	25W
	15V, 0.1~0.5A	±5%	100mV		
	-15V, 0.1~0.3A	±3%	100mV		

❖ 25W — Triple output (IEC 320-C8 / Class II)

Order No.	Output	Tol.	R&N	Effi.	Max.
P25B13A-R1B	5V, 0.5~2.5A	±5%	50mV	70%	25W
	12V, 0.1~0.8A	±5%	100mV		
	-5V, 0.1~0.3A	±3%	100mV		
P25B13D-R1B	5V, 0.5~2.5A	±5%	50mV	72%	25W
	12V, 0.1~0.8A	±5%	100mV		
	-12V, 0.1~0.3A	±3%	100mV		
P25B14E-R1B	5V, 0.5~2.5A	±5%	50mV	74%	25W
	15V, 0.1~0.5A	±5%	100mV		
	-15V, 0.1~0.3A	±3%	100mV		

50W AC-DC Triple Output

- 3 pole AC inlet IEC320-C14
- Class I power (with earth pin)
- Protections: Short circuit / Overload / Over voltage
- Fully enclosed plastic case
- LED indicator for power on
- 1 year warranty

AC input voltage range ..... 90~264VAC ; 135~370VDC
AC inrush current(max.) .... Cold start, 40A at 230VAC
Overload protection ..... Hiccup mode, auto-recovery
Over voltage protection ..... 110%~140% for +5V output
Hold up time ..... 12ms at full load
Withstand voltage ..... I/P-O/P:3kVAC, I/P-FG:1.5kVAC, 1 minute
Working temperature ..... 0~+40°C (refer to output derating curve)
Safety standards ..... UL1950, TUV EN60950-1 approved
EMC standards ..... EN55022 class B, EN61000-3-2,3, EN61000-4-2,3,4,5,6,11
Length of output cable ..... 120cm of UL2464
Standard DC plug..... R1B: DIN 5P

Order No.	Output	Tol.	R&N	Effi.	Max.
P50A13A-R1B	5V, 0.5~4.0A	±6%	50mV	70%	46.5W
	12V, 0.5~2.0A	±10%	100mV		
	-5V, 0.1~0.5A	±12%	100mV		
P50A13D-R1B	5V, 0.5~4.0A	±6%	50mV	72%	50.0W
	12V, 0.5~2.0A	±10%	100mV		
	-12V, 0.1~0.5A	±12%	100mV		
P50A14E-R1B	5V, 0.5~4.0A	±6%	50mV	74%	50.0W
	15V, 0.5~1.5A	±10%	100mV		
	-15V, 0.1~0.5A	±12%	100mV		

Medical Adaptor

18W Interchangeable Type

Features

- Interchangeable AC plugs (plug kit sold separately)
- Medical safety approved (2xMOPP)
- Suitable for BF application with appropriate system consideration
- Universal AC input / Full range
- No load power consumption <0.075W
- Energy efficiency Level VI
- Comply with EISA 2007/DoE and EU ErP
- Class II power (without earth pin)
- Protections: Short circuit / Overload / Over voltage
- Low leakage current <100μA
- Fully enclosed plastic case
- Optional lock type DC plug
- 3 years warranty

General Specification (Please refer to www.meanwell.com for detail spec.)

Order No.		GEM18I
AC input voltage range		80~264VAC; 113~370VDC
AC inrush current (max.)		Cost start, 30A at 100VAC; 60A at 230VAC
Overload protection	Range	105%~160% rated output power
	Type	Hiccup mode, auto-recovery
Over voltage protection		110%~140% rated output voltage, clamp by zener diode
Setup, rise, hold up time		500ms, 30ms, 16ms at 230VAC input
Withstand voltage		I/P-O/P: 5656VDC, 1 minute
Working temperature		-20~+50°C (refer to output derating curve)
Safety standards		ANSI/AAMI ES60601-1/60601-1-11, TUV EN60601-1/60601-1-11 approved
EMC standards		EN55022 Class B, EN61000-3-2,3, EN61000-4-2,3,4,5,6,8,11, FCC part18 class B
Length of output cable		100cm of 16AWG for 5~9V; 100cm of 18AWG for 12V; 150cm of 22AWG for 15~48V
Standard DC plug		P1J: 2.1øx5.5øx11mm/C+, turning fork type

Wall-mounted(Interchangeable Type)—18W

Order No. (main body)	Output	Tol.	R&N	Effi.
GEM18I05-P1J	5V, 0~3.00A	±5%	60mV	80%
GEM18I09-P1J	9V, 0~2.00A	±5%	60mV	84%
GEM18I12-P1J	12V, 0~1.50A	±3%	80mV	84%
GEM18I15-P1J	15V, 0~1.20A	±3%	80mV	84%
GEM18I18-P1J	18V, 0~1.00A	±2%	80mV	84%
GEM18I24-P1J	24V, 0~0.75A	±2%	80mV	85%
GEM18I48-P1J	48V, 0~0.38A	±2%	80mV	87%

Interchangeable AC Plug Specifically for GEM18I

AC Plug Type	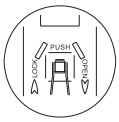	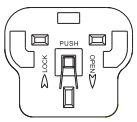
	Australian Type	U.K. Type
AC Plug Order No.	AC Plug-AU2	AC Plug-UK2
AC Plug Type	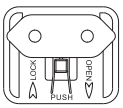	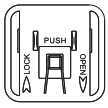
	European Type	U.S. Type
AC Plug Order No.	AC Plug-EU2	AC Plug-US2
Mix four Type	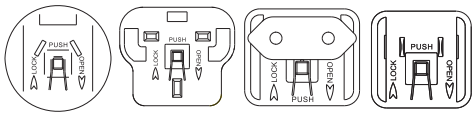	
AC Plug Order No.	AC Plug-MIX2	

Note: Main body unit and AC plug should be ordered seperately; The main body needs to be used along with any of the AC plug.

Optional DC Plug List

Tuning Fork Style	Type	A / OD	B / ID	C / L
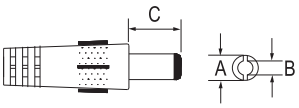	P1I	5.5	2.1	9.5
	P1J	5.5	2.1	11.0
	P1L	5.5	2.5	9.5
	P1M	5.5	2.5	11.0

Barrel Style	Type	A / OD	B / ID	C / L
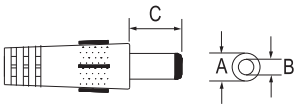	P2I	5.5	2.1	9.5
	P2J	5.5	2.1	11.0
	P2L	5.5	2.5	9.5
	P2M	5.5	2.5	11.0

Lock Style	Type	A	B	C
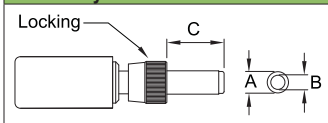	P2S (S761K)	5.53	2.03	12.06

DIN 5 Pin	Type	Pin Assignment		
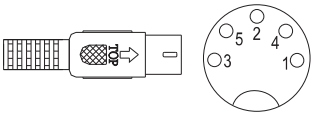	R1B		Single	Triple
		1	COM	COM
		2	COM	COM
		3	Vout	+5V
		4	COM	-Vout
		5	Vout	+Vout

DIN 4 Pin with lock	Type	Pin Assignment	
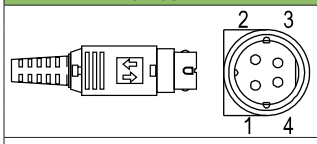	R7B	PIN No.	Output
		1	+Vout
		2	GND
		3	GND
		4	+Vout

▶ Minimum order quantity is varied for different models.

Medical Adaptor

6~36W Single Output

GSM06U | GSM06E | GSM18B/25B/36B | GSM18U/25U/36U | GSM18E/25E/36E

Features

- Universal AC input / Full range
- Medical safety approved(2xMOPP)
- Suitable for BF application with appropriate system consideration
- Low leakage current <50μA
- No load power consumption <0.1W(<0.3W for GSM06)
- Energy efficiency Level VI (GSM06 and GSM18/25/36 5~9V for Level V)
- Comply with EISA 2007/DoE, NRCan, AU/NZ MEPS, EU ErP and meet CoC Version 5(GSM18/25/36); EISA 2007 and EU ErP(GSM06)
- Class II power(without earth pin)
- 2 pole USA / EURO plug or IEC320-C8
- Protections: Short circuit / Overload / Over voltage
- Fully enclosed plastic case
- LED indicator for power on(except for GSM06)
- Optional lock type DC plug
- Certificates: B-Type: UL / CUL / TUV / CB / FCC / CE
  U-Type: UL / CUL / CB / FCC
  E-Type: TUV / CB / CE
- 3 years warranty

General Specification (Please refer to www.meanwell.com for detail spec.)

(18~36W 12~48V)

Order No.		GSM06	GSM18	GSM25	GSM36
AC input voltage range		80~264VAC; 113~370VDC			
AC inrush current (max.)		Cold start, 30A at 230VAC	Cold start, 55A at 230VAC		
Overload protection	Range	>105% rated output power	105%~170% rated output power		
	Type	Hiccup mode, auto-recovery			
Over voltage protection		110%~140%	105%~135% rated output voltage, shut down o/p voltage, re-power on to recover		
Setup, rise, hold up time		1000ms, 50ms, 12ms	500ms, 30ms, 16ms at 230VAC input		
Withstand voltage		I/P-O/P: 5656VDC	I/P-O/P: 4kVAC		
Working temperature		0~+50°C	-25~+60°C (refer to output derating curve)		
Safety standards		B-Type(except for GSM06): ANSI/AAMI ES60601-1/ES60601-1-11 , TUV EN60601-1 / EN60601-1-11 approved U-Type: ANSI/AAMI ES60601-1, ES60601-1-11 approved E-Type: TUV EN60601-1 / EN60601-1-11 approved			
EMC standards		B-Type(except for GSM06): EN55011 class B, EN61000-3-2,3, EN61000-4-2,3,4,5,6,8,11, EN61204-3, EN60601-1-2 medical level, FCC Part 15 class B U-Type: FCC Part 15 class B E-Type: EN55011 class B, EN61000-3-2,3, EN61000-4-2,3,4,5,6,8,11, EN61204-3, EN60601-1-2 medical level			
Length of output cable		120cm of UL2468, 22AWG for 5~9V; 180cm of UL2468, 24AWG for 12~24V	120cm of UL1185, 16AWG for GSM18/25/36 5~9V; 180cm of UL1185, 16AWG for GSM25 12V and GSM36 12~48V; 180cm of UL1185, 18AWG for GSM18 12~48V and GSM25 15~48V		
Standard DC plug		P1J: 2.1øx 5.5øx 11mm / C+, tuning fork type (refer to page 61 for DC plug list)			
Dimension (LxWxH)(mm)		66x 32x 42.5	79x 54x 33		

Wall-mounted — 6W

Order No.	Output	Tol.	R&N	Effi.
GSM06☐05-P1J	5V, 0~1.20A	±5%	50mV	68%
GSM06☐06-P1J	6V, 0~1.00A	±5%	50mV	74%
GSM06☐07-P1J	7.5V, 0~0.80A	±5%	80mV	74%
GSM06☐09-P1J	9V, 0~0.66A	±5%	80mV	76%
GSM06☐12-P1J	12V, 0~0.50A	±5%	100mV	77%

Order No.	Output	Tol.	R&N	Effi.
GSM06☐15-P1J	15V, 0~0.40A	±5%	120mV	79%
GSM06☐18-P1J	18V, 0~0.33A	±5%	150mV	80%
GSM06☐24-P1J	24V, 0~0.25A	±4%	180mV	82%

☐ = U / E ; U: American 2P, E: European 2P

Desktop / Wall-mounted — 18W

Order No.	Output	Tol.	R&N	Effi.
GSM18☐05-P1J	5V, 0~3.00A	±5%	60mV	80%
GSM18☐07-P1J	7.5V, 0~2.00A	±5%	80mV	83%
GSM18☐09-P1J	9V, 0~2.00A	±5%	80mV	84%
GSM18☐12-P1J	12V, 0~1.50A	±3%	120mV	85%
GSM18☐15-P1J	15V, 0~1.20A	±3%	120mV	85.5%

Order No.	Output	Tol.	R&N	Effi.
GSM18☐18-P1J	18V, 0~1.00A	±3%	150mV	86%
GSM18☐24-P1J	24V, 0~0.75A	±2%	180mV	87%
GSM18☐48-P1J	48V, 0~0.375A	±2%	240mV	88%

☐ =B / U / E ;
B: IEC320-C8, U: American 2P, E: European 2P

Desktop / Wall-mounted — 25W

Order No.	Output	Tol.	R&N	Effi.
GSM25☐05-P1J	5V, 0~4.00A	±6%	60mV	80%
GSM25☐07-P1J	7.5V, 0~2.93A	±5%	80mV	83%
GSM25☐09-P1J	9V, 0~2.77A	±5%	80mV	84%
GSM25☐12-P1J	12V, 0~2.08A	±3%	120mV	86%
GSM25☐15-P1J	15V, 0~1.66A	±3%	120mV	86%

Order No.	Output	Tol.	R&N	Effi.
GSM25☐18-P1J	18V, 0~1.38A	±3%	150mV	86%
GSM25☐24-P1J	24V, 0~1.04A	±2%	180mV	87%
GSM25☐48-P1J	48V, 0~0.52A	±2%	240mV	88%

☐ =B / U / E ;
B: IEC320-C8, U: American 2P, E: European 2P

Desktop / Wall-mounted — 36W

Order No.	Output	Tol.	R&N	Effi.
GSM36☐05-P1J	5V, 0~4.50A	±6%	80mV	80%
GSM36☐07-P1J	7.5V, 0~4.32A	±5%	80mV	83%
GSM36☐09-P1J	9V, 0~4.00A	±5%	80mV	84%
GSM36☐12-P1J	12V, 0~3.00A	±3%	120mV	86%
GSM36☐15-P1J	15V, 0~2.40A	±3%	120mV	87%

Order No.	Output	Tol.	R&N	Effi.
GSM36☐18-P1J	18V, 0~2.00A	±3%	150mV	87%
GSM36☐24-P1J	24V, 0~1.50A	±2%	180mV	87%
GSM36☐48-P1J	48V, 0~0.75A	±2%	240mV	88%

☐ =B / U / E ;
B: IEC320-C8, U: American 2P, E: European 2P

Medical Adaptor

40~90W Single Output

GSM40A/60A

GSM40B/60B

GSM90B

Features

- Universal AC input / Full range
- Medical safety approved(2xMOPP)
- Suitable for BF application with appropriate system consideration (except for GSM40A/60A)
- Low leakage current < 50μA(<100μA for GSM40A/60A/90B)
- No load power consumption <0.1W(<0.15W for GSM90B)
- Energy efficiency Level VI (except GSM40/60 5~9V for Level V)
- Comply with EISA 2007/DoE, NRCan, AU/NZ MEPS, EU ErP and meet CoC Version 5
- Built-in active PFC function(GSM90B)
- High efficiency up to 91.5%
- A-Type: Class I(with earth Pin)
  B-Type: Class II(without earth Pin)
- Protections: Short circuit / Overload / Over voltage / Over temp.(except for GSM40)
- Fully enclosed plastic case
- LED indicator for power on
- Optional lock type DC plug
- 3 years warranty

(GSM90B only) (12~48V)

General Specification (Please refer to www.meanwell.com for detail spec.)

Order No.		GSM40A/B	GSM60A/B	GSM90B
AC input voltage range		80~264VAC; 113~370VDC		
AC inrush current (max.)		Cold start, 65A at 230VAC		
Overload protection	Range	105%~160% rated output power		110%~150%
	Type	Hiccup mode, auto-recovery		
Over voltage protection	Range	105%~135% rated output voltage		
	Type	Shut down o/p voltage, re-power on to recover		
Setup, rise, hold up time		1000ms, 30ms, 50ms		1000ms, 50ms, 20ms
Withstand voltage		A-Type: I/P-O/P: 4kVAC, I/P-FG: 2kVAC, O/P-FG: Short B-Type: I/P-O/P: 4kVAC		I/P-O/P: 4kVAC
Working temperature		-30~+60°C (refer to output derating curve)		
Safety standards		ANSI/AAMI ES60601-1 / ES60601-1-11, TUV EN60601-1 / EN60601-1-11 approved		
EMC standards		EN55011 class B, EN61000-3-2,3, EN61000-4-2,3,4,5,6,8,11, EN61204-3, EN60601-1-2 medical level, FCC Part 15 class B		
Length of output cable		100cm of UL2464, 16AWG for GSM40 5~7.5V and GSM60 5~15V 100cm of UL1185, 16AWG for GSM40 9~12V 150cm of UL1185, 16AWG for GSM40 15~48V and GSM60 18~48V		100cm of UL1185, 14AWG for 12~15V; 120cm of UL1185, 16AWG for 19~48V
Standard DC plug (refer to page 61 for DC plug list)		P1J: 2.1øx5.5øx11mm/c+, tuning fork type		P1M: 2.5øx5.5øx11mm/c+, tuning fork type
Dimension (LxWxH)(mm)		125x 50x 31.5		145x 60x 32

Desktop (IEC 320-C14 / Class I) — 40W

Order No.	Output	Tol.	R&N	Effi.
GSM40A05-P1J	5V, 0.1~5.00A	±5%	100mV	81.0%
GSM40A07-P1J	7.5V, 0.1~5.34A	±5%	100mV	85.5%
GSM40A09-P1J	9V, 0.1~4.45A	±5%	100mV	86.0%
GSM40A12-P1J	12V, 0.1~3.34A	±3%	100mV	88.0%
GSM40A15-P1J	15V, 0.1~2.67A	±3%	100mV	88.5%
GSM40A18-P1J	18V, 0.1~2.22A	±3%	150mV	89.5%
GSM40A24-P1J	24V, 0.1~1.67A	±2.5%	180mV	90.0%
GSM40A48-P1J	48V, 0.1~1.84A	±2.5%	240mV	91.0%

Desktop (IEC 320-C14 / Class I) — 60W

Order No.	Output	Tol.	R&N	Effi.
GSM60A05-P1J	5V, 0.1~6.00A	±5%	100mV	81.5%
GSM60A07-P1J	7.5V, 0.1~6.00A	±5%	100mV	86.0%
GSM60A09-P1J	9V, 0.1~6.00A	±5%	100mV	87.5%
GSM60A12-P1J	12V, 0.1~5.00A	±3%	100mV	88.0%
GSM60A15-P1J	15V, 0.1~4.00A	±3%	100mV	88.5%
GSM60A18-P1J	18V, 0.1~3.33A	±3%	150mV	89.0%
GSM60A24-P1J	24V, 0.1~2.50A	±3%	180mV	90.0%
GSM60A48-P1J	48V, 0.1~1.25A	±2.5%	240mV	91.0%

Desktop (IEC 320-C8 / Class II) — 40W

Order No.	Output	Tol.	R&N	Effi.
GSM40B05-P1J	5V, 0.1~5.00A	±5%	100mV	81.0%
GSM40B07-P1J	7.5V, 0.1~5.34A	±5%	100mV	85.5%
GSM40B09-P1J	9V, 0.1~4.45A	±5%	100mV	86.0%
GSM40B12-P1J	12V, 0.1~3.34A	±3%	100mV	88.0%
GSM40B15-P1J	15V, 0.1~2.67A	±3%	100mV	88.5%
GSM40B18-P1J	18V, 0.1~2.22A	±3%	150mV	89.5%
GSM40B24-P1J	24V, 0.1~1.67A	±2.5%	180mV	90.0%
GSM40B48-P1J	48V, 0.1~0.84A	±2.5%	240mV	91.0%

Desktop (IEC 320-C8 / Class II) — 60W

Order No.	Output	Tol.	R&N	Effi.
GSM60B05-P1J	5V, 0.1~6.00A	±5%	100mV	81.0%
GSM60B07-P1J	7.5V, 0.1~6.00A	±5%	100mV	86.0%
GSM60B09-P1J	9V, 0.1~6.00A	±5%	100mV	87.5%
GSM60B12-P1J	12V, 0.1~5A	±3%	100mV	88.0%
GSM60B15-P1J	15V, 0.1~4A	±3%	100mV	88.5%
GSM60B18-P1J	18V, 0.1~3.33A	±3%	150mV	89.0%
GSM60B24-P1J	24V, 0.1~2.5A	±3%	180mV	90.0%
GSM60B48-P1J	48V, 0.1~1.25A	±2.5%	240mV	91.5%

Desktop (IEC 320-C8 / Class II) — 90W

Order No.	Output	Tol.	R&N	Effi.
GSM90B12-P1M	12V, 0~6.67A	±5%	120mV	88.0%
GSM90B15-P1M	15V, 0~6.00A	±5%	150mV	89.0%
GSM90B19-P1M	19V, 0~4.74A	±4%	180mV	89.0%
GSM90B24-P1M	24V, 0~3.75A	±3%	200mV	90.0%
GSM90B48-P1M	48V, 0~1.87A	±2.5%	240mV	91.0%

Medical Adaptor

120~220W Single Output

Features

- Universal AC input / Full range
- Medical safety approved (2xMOPP)
- Suitable for BF application with appropriate system consideration
- Low leakage current < 100μA
- No load power consumption < 0.15W
- Energy efficiency Level VI
- Comply with EISA 2007/DoE, NRCan, AU/NZ MEPS, EU ErP and meet CoC Version 5
- Built-in active PFC function
- High efficiency up to 94.5%
- Fanless design, high operating temperature up to +70°C
- Class II (without earth Pin)
- Protections: Short circuit / Overload / Over voltage / Over temp.
- Fully enclosed plastic case
- LED indicator for power on
- 3 years warranty

General Specification (Please refer to www.meanwell.com for detail spec.)

Order No.		GSM120B	GSM160B	GSM220B
AC input voltage range		80~264VAC; 113~370VDC		
AC inrush current (max.)		Cold start,70A at 230VAC	Cold start, 120A at 230VAC	
Overload protection	Range	105%~160% rated output power	105%~135% rated output power	
	Type	Hiccup mode, auto-recovery		
Over voltage protection	Range	105%~135% rated output voltage		
	Type	Shut down o/p voltage, re-power on to recover		
Setup, rise, hold up time		1500ms, 30ms, 20ms	2000ms, 20ms, 20ms	2000ms, 50ms, 20ms
Withstand voltage		I/P-O/P: 4kVAC		
Working temperature		-30~+60°C	-30~+70°C (refer to output derating curve)	
Safety standards		ANSI/AAMI ES60601-1 / ES60601-1-11, TUV EN60601-1 / EN60601-1-11 approved		
EMC standards		EN55011 class B, EN61000-3-2,3, EN61000-4-2,3,4,5,6,8,11, EN61204-3, EN60601-1-2 medical level, FCC Part 15 class B		
Length of output cable		100cm of UL2464, 18AWGx4C for 12V; 120cm of UL2464, 18AWGx4C for 15~48V	100cm of UL2464, 16AWGx4C for 12V; 120cm of UL2464, 18AWGx4C for 15~48V	100cm of UL2464, 18AWGx4C
Standard DC plug (refer to page 61 for DC plug list)		R7B: power DIN 4P with lock type		
Dimension (LxWxH)(mm)		167x 67x 35	175x 72x 35	210x 85x 46

Desktop (IEC 320-C8 / Class II) — 120W

Order No.	Output	Tol.	R&N	Effi.
GSM120B12-R7B	12V, 0~8.5A	±5%	120mV	88.0%
GSM120B15-R7B	15V, 0~7.00A	±5%	150mV	89.0%
GSM120B20-R7B	20V, 0~6.00A	±5%	180mV	89.0%
GSM120B24-R7B	24V, 0~5.00A	±3%	200mV	90.0%
GSM120B48-R7B	48V, 0~2.50A	±2.5%	240mV	91.5%

Desktop (IEC 320-C8 / Class II) — 160W NEW

Order No.	Output	Tol.	R&N	Effi.
GSM160B12-R7B	12V, 0~11.5A	±5%	80mV	90.0%
GSM160B15-R7B	15V, 0~9.6A	±5%	100mV	91.0%
GSM160B20-R7B	20V, 0~8.0A	±4%	150mV	93.0%
GSM160B24-R7B	24V, 0~6.67A	±3%	180mV	93.0%
GSM160B48-R7B	48V, 0~3.34A	±3%	240mV	94.0%

Desktop (IEC 320-C8 / Class II) — 220W NEW

Order No.	Output	Tol.	R&N	Effi.
GSM220B12-R7B	12V, 0~15.0A	±5%	80mV	90.0%
GSM220B15-R7B	15V, 0~13.4A	±5%	100mV	90.0%
GSM220B20-R7B	20V, 0~11.0A	±4%	150mV	92.5%
GSM220B24-R7B	24V, 0~9.20A	±3%	180mV	93.5%
GSM220B48-R7B	48V, 0~4.60A	±2%	240mV	94.5%

Q.A.

Who can provide you better services and be a trustworthy partner in the power industry?

— "MEAN WELL" tries to be —

Best products also need best service.

We have authorized distributors all over the world. They have sufficient stock for your prompt delivery. Also they can offer you technical support & RMA services. Please contact your local distributors for more product information. You can also contact us at info@meanwell.com for information of your local distributors.

Moistureproof Adaptor

60~120W Single Output

Features

- IP67 design for power body
- Universal AC input / Full range (except for OWA-120E)
  AC input 180~264VAC only (OWA-120E)
- No load power consumption <0.15W
- Energy efficiency Level VI
- E-Type: meet CoC Version 5 (OWA-60E/90E);
  comply with EU ErP
  U-Type: Comply with EISA 2007/DoE and NRCan
- Built-in active PFC function (OWA-90/120)
- Class II power (without earth pin)
- High efficiency up to 91%
- Fanless design, cooling by free air convection
- Fully enclosed plastic case
- Protections: Short circuit / Over current /
  Over voltage / Over temperature
- Suitable for household appliances or the electronic applications at highly dusty or damp environment
- 5 years warranty

General Specification (Please refer to www.meanwell.com for detail spec.)

Model No.		OWA-60☐	OWA-90☐	OWA-120☐
AC input voltage range		90~264VAC; 127~370VDC (180~264VAC ; 254~370VDC for OWA-120E)		
AC inrush current (max.)		Cold start, 65A at 230VAC	Cold start, 60A at 230VAC	
Overload protection		E-Type: 105~115% hiccup mode, auto-recovery; U-Type: 95~108% constant current limiting, auto-recovery		
Over voltage protection		110%~140% rated output voltage, re-power on to recover		
Over temperature protection		Shut down output voltage, re-power on to recover		
Withstand voltage		I/P-O/P: 3.75KVAC		
Working temperature		-35~+70°C	-40~+70°C (refer to output derating curve)	
Safety standards		E-Type: DEKRA EN60335-1(except for 48~54V), EN61558-1, EN61558-2-16 approved; U-Type: UL8750 listed approved	E-Type: TUV EN60335-1(except for 42~54V), EN61558-1, EN61558-2-16 approved; U-Type: UL8750 listed approved	E-Type: DEKRA EN60335-1(except for 48~54V), EN61558-1, EN61558-2-16 approved; U-Type: UL8750 listed approved
EMC standards		E-Type: EN55022 class B, EN55014, EN61000-3-2,-3; U-Type: FCC Part 15		
Standard plug	Input	E-Type: CEE 7/7 EU plug; U-Type: NEMA 1-15P plug		
	Output	2.1øx5.5øx11mm / C+, tuning fork type	E-Type: XLR 4P, male type; U-Type: P1M, 2.5øx5.5øx11mm / C+, tuning fork type (OWA-90U 20~54V only) or R7B, Power DIN 4P with lock type	
Length of cable	Input	E-Type: 150cm of H05RN-F 1.0mm^2 x2C; U-Type: 150cm of SVT 18AWGx2C		
	Output	E-Type: 30cm of H05RN-F 1.0mm^{2}x2C U-Type: 30cm of UL1185 16AWG x2C	E-Type: 30cm of H05RN-F 1.0mm^2 x2C U-Type: 30cm of UL2464 18AWG x4C for R7B; 30cm of UL2464 16AWGx2C for P1M	E-Type: 30cm of H07RN-F 1.5mm^2 x2C U-Type: 30cm of UL2464 18AWG x4C
Dimension (LxWxH)(mm)		130x 53x 35	171x 63x 37.5	191x 63x 37.5

OWA-60 Series

(E-Type) (U-Type, 42~54V) (U-Type, 12~36V) (E-Type) (E-Type) (U-Type) NEW

Model No.	Output	Tol.	R&N	Effi.
OWA-60☐ -12	12V, 0~5A	±4.0%	150mV	88%
OWA-60☐ -15	15V, 0~4A	±4.0%	150mV	89%
OWA-60☐ -20	20V, 0~3A	±4.0%	150mV	89%
OWA-60☐ -24	24V, 0~2.5A	±3.0%	150mV	90%
OWA-60☐ -30	30V, 0~2A	±3.0%	200mV	90%
OWA-60☐ -36	36V, 0~1.67A	±2.0%	200mV	90%
OWA-60☐ -42	42V, 0~1.5A	±1.0%	250mV	90%
OWA-60☐ -48	48V, 0~1.25A	±1.0%	250mV	91%
OWA-60☐ -54	54V, 0~1.12A	±1.0%	350mV	91%

☐ = E / U ; E: European 2P, U: American 2P

OWA-90 Series

(E-Type) (U-Type, 42~54V) (U-Type, 12~36V) (E-Type) (U-Type)

Model No.	Output	Tol.	R&N	Effi.
OWA-90☐ -12	12V, 0~7.5A	±4.0%	150mV	89%
OWA-90☐ -15	15V, 0~6A	±4.0%	150mV	90%
OWA-90☐ -20-▲	20V, 0~4.5A	±4.0%	150mV	90%
OWA-90☐ -24-▲	24V, 0~3.75A	±3.0%	150mV	90%
OWA-90☐ -30-▲	30V, 0~3A	±3.0%	200mV	90%
OWA-90☐ -36-▲	36V, 0~2.5A	±2.0%	200mV	91%
OWA-90☐ -42-▲	42V, 0~2.15A	±1.0%	250mV	91%
OWA-90☐ -48-▲	48V, 0~1.88A	±1.0%	250mV	91%
OWA-90☐ -54-▲	54V, 0~1.67A	±1.0%	350mV	91%

☐ = E / U ; E: European 2P, U: American 2P ; ▲=Blank(R7B)/P1M

OWA-120 Series

(E-Type) (U-Type) (E-Type) (E-Type)(U-Type) NEW

Model No.	Output	Tol.	R&N	Effi.
OWA-120E-12	12V, 0~9.6A	±4.0%	150mV	87.5%
OWA-120U-12	12V, 0~10A	±4.0%	150mV	87.5%
OWA-120☐ -15	15V, 0~8A	±4.0%	150mV	89.0%
OWA-120☐ -20	20V, 0~6A	±4.0%	150mV	90.0%
OWA-120☐ -24	24V, 0~5A	±4.0%	150mV	90.5%
OWA-120☐ -30	30V, 0~4A	±3.0%	200mV	90.0%
OWA-120☐ -36	36V, 0~3.4A	±2.0%	200mV	90.0%
OWA-120☐ -42	42V, 0~2.9A	±1.0%	250mV	90.5%
OWA-120☐ -48	48V, 0~2.5A	±1.0%	250mV	90.5%
OWA-120☐ -54	54V, 0~2.3A	±1.0%	350mV	90.5%

☐ = E / U ; E: European 2P, U: American 2P

Green Charger 30~326W Portable Battery Charger

30W Green Adaptor with Charging Function

- Universal AC input / Full range
- Class II power (without earth pin)
- No load power consumption < 1W
- Constant current and voltage (CC, CV mode)
- High reliability
- Suitable for high surge current equipment
- Protections: Short circuit / Overload / Over voltage / Over temp.
- 2 color LED indicator for charging status
- Fully enclosed plastic case
- 2 years warranty

AC input voltage range ..... 90~264VAC; 127~370VDC
Overload protection ..... 90%~110% constant current mode and over 300% pulsing mode
Over voltage protection ..... 110%~135% rated output voltage
Withstand voltage ..... I/P-O/P: 3kVAC, 1minute
Working temperature ..... 0~+50°C (refer to output derating curve)
Safety standards ..... UL60950-1, CSA 22.2, TUV EN60950-1 approved
EMC standards EN55014-1, EN61000-3-2,3, EN61000-4-2,3,4,5,6,11
Length of output cable ..... 120cm of UL1185, 16AWG for 4.2~8.4V
180cm of UL1185, 18AWG for 14.3~28.6V
Standard DC plug ..... P1J: 2.1øx5.5øx11mm / C+, tuning fork type

Order No.	Output	R&N	Effi.
GC30☐-0P1J	4.2V, 0~4.00A	50mV	55%
GC30☐-1P1J	5.6V, 0~3.99A	50mV	70%
GC30☐-11P1J	7.2V, 0~3.00A	80mV	74%
GC30☐-2P1J	8.4V, 0~3.00A	80mV	76%
GC30☐-4P1J	14.3V, 0~2.09A	100mV	78%
GC30☐-5P1J	16.8V, 0~1.60A	100mV	78%
GC30☐-6P1J	28.6V, 0~1.04A	150mV	80%

☐ = B / U / E ; B: IEC320-C8, U: American 2P, E: European 2P

120W Green Adaptor with Charging Function

(GC120Axx-AD1)

- Universal AC input / Full range
- Built-in active PFC function
- No load power consumption < 0.5W
- High efficiency up to 91%
- 2 stage charging characteristic
- Cooling by free air convection
- 3 pole AC inlet IEC320-C14
- Class I power (with earth pin)
- Protections: Short circuit / Overload / Over voltage / Over temp.
- Fully enclosed plastic case
- 2 color LED indicator for charging status
- 2 years warranty

AC input voltage range ..... 85~264VAC; 120~370VDC
Overload protection ..... 90~110% constant current, auto-recovery
Over voltage protection ..... 105%~135% shut down O/P voltage, re-power on to recover
Withstand voltage ..... I/P-O/P: 3kVAC
Working temperature ..... -30~+70°C (refer to derating curve)
Safety standards ..... UL1012 (GC120Axx-AD1 only), EN60950-1 approved
EMC standards ..... EN55022 class B, FCC part 15 class B, EN61000-3-2,3, EN61000-4-2,3,4,5,6,8,11
Length of output cable ..... 120cm of UL2464, 18AWGx 4C
Standard DC plug ..... Power DIN 4P with lock type (R7B)

Model No.	Output	Effi.
GC120A12-☐	13.6V, 7.5A	86.5%
GC120A24-☐	27.2V, 4.42A	90.0%
GC120A48-☐	54.4V, 2.21A	91.0%

☐ = R7B / AD1 ; R7B= 4 pin power din, AD1= Anderson connector

160W Green Adaptor with Charging Function

(GC160Axx-AD1)

- Universal AC input / Full range
- Built-in active PFC function
- No load power consumption < 1W
- High efficiency up to 94%
- 2 stage charging characteristic
- Cooling by free air convection
- 3 pole AC inlet IEC320-C14
- Class I power (with earth pin)
- Protections: Short circuit / Overload / Over voltage / Over temp.
- Fully enclosed plastic case
- 2 color LED indicator for charging status
- 2 years warranty

AC input voltage range .... 85~264VAC; 120~370VDC
Overload protection ..... 90%~110% constant current, auto-recovery
Over voltage protection .... 105%~135% rated output voltage, re-power on to recover
Withstand voltage ..... I/P-O/P: 3kVAC
Working temperature ..... -30~+70°C (refer to derating curve)
Safety standards ..... UL1012(GC160Axx-AD1 only), EN60950-1 approved
EMC standards ..... EN55022 class B, FCC part 15 class B, EN61000-3-2,3, EN61000-4-2,3,4,5,6,8,11
Length of output cable ..... 120cm of UL2464, 18AWGx 4C
Standard DC plug ..... Power DIN 4P with lock type (R7B)

Model No.	Output	Effi.
GC160A12-☐	13.6V, 10.0A	89.0%
GC160A24-☐	27.2V, 5.89A	92.5%
GC160A48-☐	54.4V, 2.95A	94.0%

☐ = R7B / AD1 ; R7B= 4 pin power din, AD1= Anderson connector

218W & 326W Green Adaptor with Charging Function

(GC330) (GC220Axx-AD1)

	GC220	GC330
Case (mm)	210x85x46	220x95x46
Connector		

- Universal AC input / Full range
- Built-in active PFC function
- No load power consumption < 1W
- High efficiency up to 93.5%
- 2 stage charging characteristic
- Cooling by free air convection
- 3 pole AC inlet IEC320-C14
- Class I power (with earth pin)
- Protections: Short circuit / Overload / Over voltage / Over temperature
- Fully enclosed plastic case
- 2 color LED indicator for charging status
- 2 years warranty

AC input voltage range ..... 90~264VAC; 127~370VDC
Overload protection ..... 90%~110% constant current, auto-recovery
Over voltage protection ..... 105%~135% rated output voltage, re-power on to recover
Withstand voltage ..... I/P-O/P: 3kVAC
Working temperature ..... -30~+60°C (refer to output derating curve)
Safety standards .... GC220: TUV EN60950-1, UL1012 (GC220Axx-AD1 only) approved
GC330: TUV EN60950-1, UL60950-1 approved
EMC standards ..... EN55022 class B, FCC part 15 class B, EN61000-3-2,3, EN61000-4-2,3,4,5,6,8,11
Length of output cable ..... 100cm of UL2464, 16AWGx 4C
Standard DC plug ... GC220: Power DIN 4P with lock type (R7B)
GC330: 4P/6.35mm pitch, AMP 1-480702-0 (power supply side); AMP 1-480703-0 (customer side)

❖ GC220 Series

Model No.	Output	Effi.
GC220A12-☐	13.6V, 13.5A	89.0%
GC220A24-☐	27.2V, 8A	92.5%
GC220A48-☐	54.4V, 4A	93.0%

☐ = R7B/ AD1 ; R7B= 4 pin power din, AD1= Anderson connector

❖ GC330 Series

Model No.	Output	Effi.
GC330A36-C4P	40.8V, 8A	93.5%
GC330A48-C4P	54.4V, 6A	93.5%

Charger

120W Battery Charger

PCB Type: 144x 90x 35 mm
External Case Type: 180x 96x 49 mm

P.C.B. Dimension

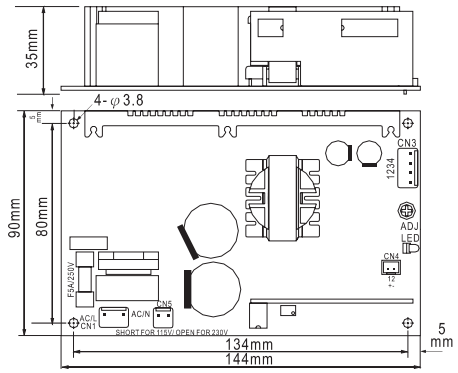

Case Drawing

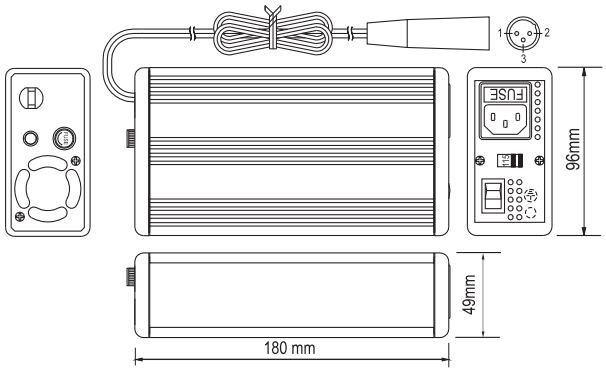

Features

- AC input range selectable by switch
- Passive PFC, PF> 0.65(option)
- Protection for deeply discharged battery
- Protections: Short circuit / Overload / Over voltage / Over temperature
- Charger for lead-acid batteries
- Built-in ON/OFF power switch
- 3 poles AC inlet with fuse holder
- Charging type can be selected (option)
- 2 color LED loading indicator
- EN60335 approved
- Low cost, high reliability
- Open frame models available (without safety approval)
- 2 years warranty

General Specification

AC input voltage range .....88~132VAC/ 176~264VAC selectable by switch
AC inrush current (max.) ....Cold start, 25A at 115VAC, 50A at 230VAC
Overload protection .....90%~110% constant current limiting ,auto-recovery
Over voltage protection ..... 108%~127% rated output voltage
Setup, rise, hold up time ....1000ms, 50ms, 16ms at full load and 230VAC
Withstand voltage ..... I/P-O/P: 3kVAC, I/P-FG: 1.5kVAC, O/P-FG: 0.5kVAC, 1 minute
Working temperature .....-10~+45°C, derating curve may vary for different models
Safety standards .....UL60950-1, TUV EN60950-1, EN60335-1, EN60335-2-29(except for 55.2V) approved
EMC standards ..... EN55022 class B, EN61000-4-2,3,4,5,6,8,11, EN61000-3-2,3
DC output cable ..... 6 ft. of SPT-2, 18AWGx2C
Standard output connector ... XLR 3P, male type
Packing .....1.1kg ; 16pcs / 17.9kg / 1.47CUFT (without PFC)
1.24kg ; 16pcs / 20.1kg / 1.47CUFT (with PFC)

Model No.	Output	Tol.	R&N	Effi.
P□-120□-13□	13.8V, 0~7.2A	±3~±8.5%	150mV	73%
P□-120□-27□	27.6V, 0~4.3A	±1~±8.0%	200mV	79%
P□-120□-54□	55.2V, 0~2.2A	±1~±7.5%	250mV	79%

Charging Curve

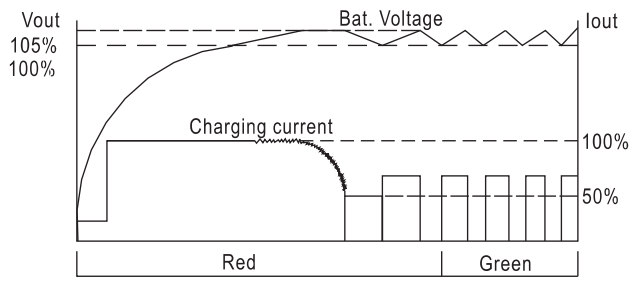

Type A: pulse charger (detect on bat. voltage)

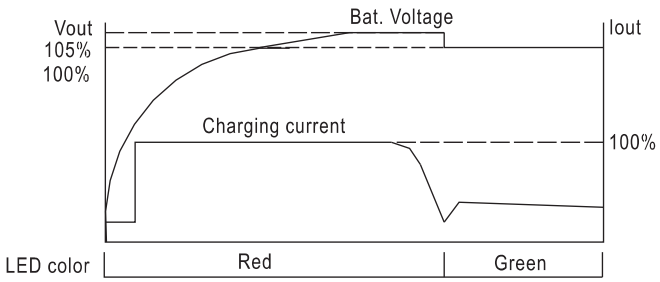

Type B: 2 section voltage charger (detect on charging current)

Order Information

P A - 120 P - 13 C

A: Pulse charge
B: 2 section voltage charge

P: With PFC
N: None PFC

P : Open P.C.B.
C : With case

13: 13.8V
27: 27.6V
54: 55.2V

108W~216W Desktop Power Supply or Charger

- AC input range selectable by switch
- Protections: Short circuit / Overload / Over voltage / Over temp.
- 3 color LED loading indicator
- Battery under / over voltage and polarity protection (ESC only)
- Cooling by free air convection (120W)
- Built-in DC fan with fan ON/OFF auto control at 50°C (240W)
- 2 years warranty

AC input voltage range ..... 88~132VAC / 176~264VAC selectable by switch
AC inrush current ..... Cold start, 40A at 230VAC
DC adjustment range ..... 13.5V: 12~15V, 27V: 24~30V, 54V: 48~56V
Overload protection ..... 105%~135% fold back current limiting, auto-recovery
Over voltage protection ..... 115%~135% rated output voltage
Withstand voltage ..... I/P-O/P: 3kVAC, I/P-FG:1.5kVAC, 1minute
Working temperature ..... -10~+60°C (refer to output derating curve)
Safety standards ..... CSA 61010-1 approved
EMC standards EN55022/B, EN61000-3-2,3, EN61000-4-2,3,4
Packing ..... 1.38kg ; 8pcs / 12.0kg / 1.1CUFT (120W)
1.5kg ; 8pcs / 13.0kg / 1.1CUFT (240W)

❖ ESC/P-120 Series

Model No.	Output	Tol.	R&N	Effi.
ESC-120-13.5	13.5V, 0~8A	±2%	120mV	81%
ESC-120-27	27V, 0~4A	±1%	150mV	83%
ESC-120-54	54V, 0~2A	±1%	400mV	84%
ESP-120-13.5	13.5V, 0~8A	±2%	120mV	81%
ESP-120-27	27V, 0~4A	±1%	150mV	83%
ESP-120-54	54V, 0~2A	±1%	400mV	84%

❖ ESC/P-240 Series

Model No.	Output	Tol.	R&N	Effi.
ESC-240-13.5	13.5V, 0~16A	±2%	120mV	81%
ESC-240-27	27V, 0~8A	±1%	150mV	84%
ESC-240-54	54V, 0~4A	±1%	400mV	85%
ESP-240-13.5	13.5V, 0~16A	±2%	120mV	81%
ESP-240-27	27V, 0~8A	±1%	150mV	84%
ESP-240-54	54V, 0~4A	±1%	400mV	85%

230W Single Output Battery Charger

(PB-230-xxAD1)

- 3 stage charging
- Universal AC input / Full range
- Built-in active PFC function
- Protections: Short circuit / Over voltage / Over temperature
- 2 color LED loading indicator
- Built-in remote ON-OFF control
- Fan ON/OFF control
- Low cost, high realiability
- 2 years warranty

AC input voltage range ..... 90~264VAC; 127~370VDC
AC inrush current (max.) .. Cold start, 50A at 230VAC
Over voltage protection .... 102%~125% shut off, re-power on to recover
Withstand voltage ..... I/P-O/P: 3kVAC, I/P-FG: 1.5kVAC, O/P-FG:0.5kVAC
Working temperature ..... -20~+50°C (refer to output derating curve)
Safety standards ..... UL1012(PB-230xx-AD1 only), EN60950-1 approved
EMC standards ..... EN55022 class B, EN61000-4-2,3,4,5,6,8,11, EN61000-3-2,3
Packing ..... 1.21Kg ; 12pcs / 15.5kg / 1.29CUFT

Model No.	Output	Effi.
PB-230-12□	14.4V, 0~16A	81.5%
PB-230-24□	28.8V, 0~8A	85.5%
PB-230-48□	57.6V, 0~4A	86.0%

□= Blank, AD1; Blank= XLR 4P, male type, AD1= Anderson connector

300W Single Output Battery Charger

(except for 48V) (P type only)

- Optimal 3 stage charging characteristic
- AC input range selectable by switch
- Passive PFC compliance to EN61000-3-2 class A (option)
- Protections: Reverse polarity / Short circuit / Over voltage / Over temperature
- Charger for lead-acid batteries
- Built-in ON/OFF power switch
- 3 poles AC inlet (IEC 320-C14)
- 2 color LED loading indicator
- Built-in remote ON/OFF control
- Cooling by free air convection
- 3 years warranty

AC input voltage range ..... 90~132VAC / 180~264VAC selectable by switch
AC inrush current (max.) .. Cold start, 60A at 230VAC
Over voltage protection ..... 108%~125% rated output voltage
Withstand voltage ..... I/P-O/P: 3kVAC, I/P-FG: 1.5kVAC, 1 minute
Working temperature ..... -10~+50°C (refer to output derating curve)
Safety standards ..... IEC60335-2-29 CB approval by TUV (except for 48V), UL60950-1 approved
EMC standards ..... EN55022 class B, EN61000-4-2,3,4,5,6,8,11, EN61000-3-2,3 (P type)
Packing ..... 1.45kg ; 6pcs / 9.7kg / 0.95CUFT

Model No.	Output (20 min.) /	(Continuous at 25°C)	Effi.
PB-300□-12	14.4V, 20.85A /	12.5A	85%
PB-300□-24	28.8V, 10.50A /	6.25A	86%
PB-300□-48	57.6V, 5.3A /	3.20A	88%

□ = P: with PFC; N: non PFC

360W Single Output Battery Charger

(P type only)
(except for 48V) (P type only)

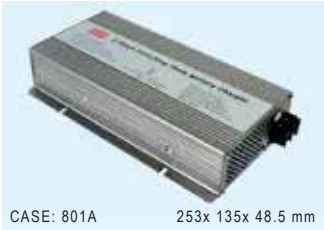

- Optimal 3 stage charging characteristic
- AC input range selectable by switch
- Passive PFC compliance to EN61000-3-2 class A (option)
- Protections: Reverse polarity / Short circuit / Over voltage / Over temperature
- Charger for lead-acid batteries
- Built-in ON/OFF power switch
- 3 poles AC inlet (IEC 320-C14)
- 2 color LED loading indicator
- Built-in remote ON/OFF control
- Cooling by built-in DC fan
- 3 years warranty

AC input voltage range ..... 90~132VAC / 180~264VAC selectable by switch
AC inrush current (max.) .. Cold start, 60A at 230VAC
Over voltage protection .... 108%~125% rated output voltage
Withstand voltage ..... I/P-O/P: 3kVAC, I/P-FG: 1.5kVAC, 1 minute
Working temperature ..... -20~+60°C (refer to output derating curve)
Safety standards ..... IEC60335-2-29 CB approval by TUV (except for 48V), UL60950-1 approved
EMC standards ..... EN55022 class B, EN61000-4-2,3,4,5,6,8,11, EN61000-3-2,3 (P type)
Packing ..... 1.5kg ; 6pcs / 10kg / 0.95CUFT

Model No.	Output	Effi.
PB-360□-12	14.4V, 24.3A	85%
PB-360□-24	28.8V, 12.5A	86%
PB-360□-48	57.6V, 6.25A	87%

□= P: with PFC; N: non PFC

600W Single Output Battery Charger

CASE: 805C 230x 158x 67 mm

- 2/3/8 stage smart charger for lead-acid batteries
- Microprocessor controlled power management
- Universal AC input / Full range
- Built-in active PFC function
- Protections: Reverse polarity / Short circuit / Over voltage / Over temperature
- Built-in temp. compensation function
- Status signal sent by relay contacts
- 3 color LED loading indicator
- Built-in remote ON-OFF control
- Fan speed control (depend on charging current)
- Charging curve can be modified for different battery applications (optional)
- 3 years warranty

AC input voltage range ..... 90~264VAC; 127~370VDC
AC inrush current (max.) .. Cold start, 50A at 230VAC
Over voltage protection .... 112%~125% shut off, re-power on to recover
Withstand voltage ..... I/P-O/P: 3kVAC, I/P-FG: 2kVAC, O/P-FG: 0.5kVAC
Working temperature ..... -20~+60°C (refer to output derating curve)
Safety standards ..... TUV EN60335-1, EN60335-2-29(except for 48V), EN60950-1(48V only), UL1012 approved
EMC standards .....EN55022 class B, EN61000-3-2,3, EN61000-4-2,3,4,5,6,8,11
Connection .....IEC inlet for input; copper pillars for output
Packing .....2.2kg ; 6pcs / 14.2kg / 1.76CUFT

Model No.	Output	Effi.
PB-600-12	14.4V, 0~40.0A	86%
PB-600-24	28.8V, 0~21.0A	87%
PB-600-48	57.6V, 0~10.5A	89%

1000W Single Output Battery Charger

CASE: 804B 300x 184x 70 mm

- 2/3/8 stage smart charger for lead-acid batteries
- Microprocessor controlled power management
- Universal AC input / Full range
- Built-in active PFC function
- Protections: Reverse polarity / Short circuit / Over voltage / Over temperature
- Built-in temp. compensation function
- Can be connected to 2 battery banks
- Status signal sent by relay contacts
- 3 color LED loading indicator
- Built-in remote ON/OFF control
- Fan speed control
- Charging curve can be modified for different battery applications (optional)
- 3 years warranty

AC input voltage range ..... 90~264VAC ; 127~370VDC
AC inrush current (max.) .... Cold start, 50A at 230VAC
Over voltage protection ..... 110%~125% shut off, re-power on to recover
Withstand voltage ..... I/P-O/P: 3kVAC, I/P-FG: 2kVAC, 1 minute
Working temperature ..... -20~+60°C (refer to output derating curve)
Safety standards ..... UL60950-1, TUV EN60950-1 approved
EMC standards ..... EN55022 class B conducted, EN61000-4-2,3,4,5,6,8,11, EN61000-3-2,3
Connection .....IEC inlet for input; copper pillars for output
Packing .....3.5kg ; 4pcs / 15kg / 1.83CUFT

Model No.	Output	Effi.
PB-1000-12	14.4V, 60.0A	85%
PB-1000-24	28.8V, 34.7A	88%
PB-1000-48	57.6V, 17.4A	89%

600W Single Output Battery Charger

CASE: 228A 280x 144x 48.5 mm

- 3 stage charger for lead-acid batteries
- Universal AC input 90~305VAC
- Built-in active PFC function
- No load power consumption < 0.5W at remote OFF
- High efficiency up to 95.5%
- Fanless design, cooling by free air convection
- Aluminum case and filling with heat-conducted silicone
- Withstand 10G vibration test
- Operating altitude up to 5000 meters
- Vo and Io can be adjusted through internal potentiometer
- Protections: Short circuit / OVP / OTP
- 3 color LED loading indicator
- 6 years warranty

AC input voltage range ..... 90~305VAC; 127~431VDC
AC inrush current (max.) .. Cold start, 70A at 230VAC
DC adjustment range ..... -20%~+5% rated output voltage
Current adjustment range ..50%~100% rated output current
Over voltage protection .... 112%~142% shut off, re-power on to recover
Withstand voltage ..... I/P-O/P: 3.75kVAC, I/P-FG: 2kVAC, O/P-FG: 1.5kVAC
Working temperature ..... -40~+70°C (refer to output derating curve)
Safety standards ..... UL60950-1, TUV EN60950-1 approved
EMC standards .....EN55022 conduction class B, radiation class A EN61000-3-2,3, EN61000-4-2,3,4,5,6,8,11
Connection .....3+7P/11mm pitch terminal block with cover

Model No.	Output	Effi.
HEP-600C-12	14.4V, 0~35.0A	93.5%
HEP-600C-24	28.8V, 0~21.0A	94.5%
HEP-600C-48	57.6V, 0~10.5A	95.5%

Built-in Charging Curves for PB-600 and PB-1000

2-Stage Charging Curve

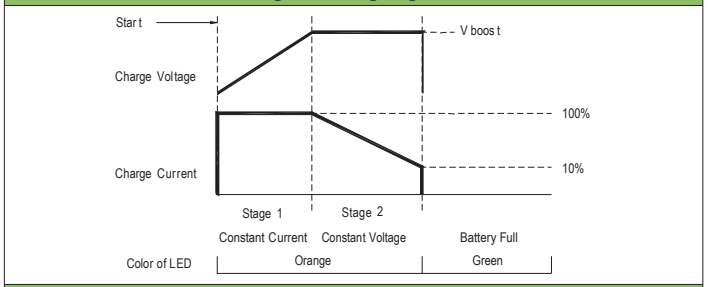

3-Stage Charging Curve

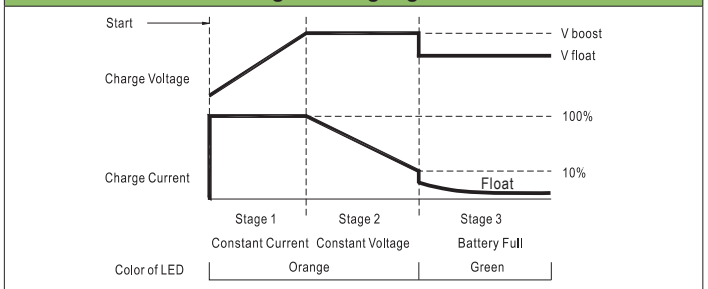

8-Stage Charging Curve

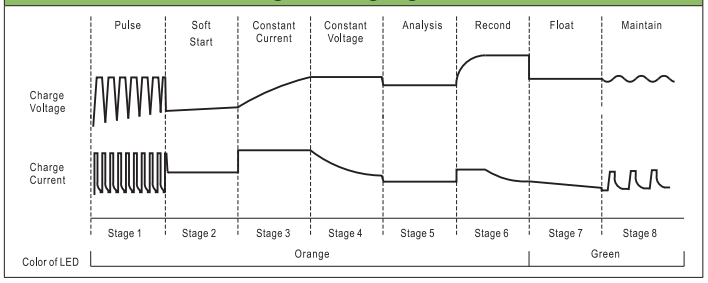

19" Rack Power

1000~24000W Single Output

RCP-1000 RCP-1U RCP-1600 RHP-1U

Features

- Universal AC input / Full range
- Withstand 300VAC surge for 5 seconds (RCP-1600)
- Built-in auxiliary power
- Built-in active PFC function
- Protections: Short circuit / Overload / Over voltage / Over temperature
- Forced air cooling by built-in DC fan
- High power density up to 25W/inch^3 (RCP-1600)
- 1U low profile
- Vo can be trimmed by external resistor (RCP-1000) or external control signal (RCP-1600)
- Io can be trimmed by external control signal (RCP-1600)
- Active current sharing up to 3 units (RCP-1000) or 5 units (RCP-1600) in one 19" rack, 3 racks max. can be operated in parallel (up to 8 units for RCP-1000 or 15 units for RCP-1600)
- Built-in remote ON/OFF control
- Built-in remote sense function
- Internal DR-ing diode, hot-swap operation
- AC OK (RCP-1000) and DC OK signal output
- Optional I^{2}C serial data bus (RCP-1000); built-in PMBus serial communication (RCP-2000)
- 3 years warranty for RCP-1000, 5 years warranty for RCP-1600

General Specification (Please refer to www.meanwell.com for detail spec.)

Order No.	RCP-1000	RCP-1600
AC input voltage range	90~264VAC, 127~370VDC	90~264VAC, 127~400VDC
AC inrush current (max.)	Cold start, 50A at 230VAC	Cold start, 35A at 230VAC
DC adjustment range	Vo: ±3% by potentiometer, or to 90~110% of rated output voltage by external resistor	Vo: -1%~+22.5% by potentiometer, or to 40~125% of rated output voltage by 1~5VDC external control signal Io : to 20%~100% of rated output current by 1~5VDC external control signal
Overload protection	105%~125% constant current limiting, auto-recovery	105%~115% constant current limiting and shut down O/P voltage 5 sec. after O/P voltage is down low, re-power on to recover
Over voltage protection	110%~135% shut down o/p voltage, re-power on to recover	130%~155% shut down o/p voltage, re-power on to recover
Withstand voltage	I/P-O/P:3kVAC, I/P-FG:2kVAC, O/P-F/G: 0.7kVDC	I/P-O/P:3kVAC, I/P-FG:2kVAC, O/P-F/G: 1.5kVDC
Working temperature	-20~+60°C	-30~+70°C(refer to output derating curve)
Safety standards	UL60950-1, TUV EN60950-1 approved (RCP-1600 pending)	
EMC standards	EN55022 class B, EN61000-3-2,3, EN61000-4-2,3,4,5,6,8,11, EN61000-6-2 heavy industry level (RCP-1600 pending)	
Connection	Postronic PCIB24W9M400A1	Postronic PCIM34W13M400A1
Dimension(LxWxH)	295x 127x 41mm (483.6x 350.8x 44mm for RCP-1U)	300x 85x 41mm (440x 365x 44mm for RHP-1U)
Case No.	952A (959A for RCP-1U)	237A (242A for RHP-1U)
Packing	1.93kg (RCP-1000, single unit); 3.9kg (RCP-1U, single empty rack)	1.75kg (RCP-1600, single unit); 4.4kg (RHP-1U, single empty rack)

Order Information for RCP-1000 and RCP-1U

Single Unit: RCP-1000-12-C

- C : with I^{2}C interface
- —: without I^{2}C interface
- Output voltage(12V/24V/48V)

Rack: RCP-1U I

- I : AC inlet(IEC320-C14)
- T : Terminal block

Order Information for RCP-1600 and RHP-1U

Single Unit: RCP-1600-12

- Output voltage(12V/24V/48V)

Rack: RHP-1U I

- I : AC inlet(IEC320-C14)
- T : Terminal block

Single Unit — 1000W

Parallel

Model No.	Output	Tol.	R&N	Effi.
RCP-1000-12	12V, 0~60A	±1%	150mV	81.0%
RCP-1000-24	24V, 0~40A	±1%	200mV	87.0%
RCP-1000-48	48V, 0~21A	±1%	300mV	89.0%

Single Unit — 1600W Under Development UL/CUL/TUV/CB/CE pending

Model No.	Output	Tol.	R&N	Effi.
RCP-1600-12	12V, 0~125A	±1%	150mV	87.0%
RCP-1600-24	24V, 0~67A	±1%	200mV	90.5%
RCP-1600-48	48V, 0~33.5A	±1%	300mV	93.0%

19" Rack Power

2000~18000W Single Output

RCP-2000

RKP-1U

Features

- Universal AC input / Full range
- Withstand 300VAC surge for 5 seconds
- Built-in 5V/0.3A, 12V/0.8A auxiliary power
- Built-in active PFC function
- Protections: Short circuit / Overload / Over voltage / Over temperature
- Forced air cooling by built-in DC fan
- High power density 21.4W/inch^3
- 1U low profile
- Active current sharing up to 6000W (3 units) in one 19" rack, 3 racks max. can be operated in parallel (up to 9 units)
- Built-in remote ON/OFF control
- Built-in remote sense function
- Internal DR-ing FET, hot-swap operation
- BUilt-in PMBus serial communication
- AC OK and DC OK signal, fan fail, OTP alarm signal
- 3 years warranty

General Specification (Please refer to www.meanwell.com for detail spec.)

Order No.	RCP-2000
AC input voltage range	90~264VAC, 127~370VDC
AC inrush current (max.)	Cold start, 50A at 230VAC
DC adjustment range	Vo: -12%~+15% by potentiometer
Overload protection	105%~125% constant current limiting, shut off after 5 sec., re-power on to recover
Over voltage protection	120%~145% shut down o/p voltage, re-power on to recover
Setup, rise, hold up time	1500ms, 60ms, 10ms at full load and 230VAC
Withstand voltage	I/P-O/P:3kVAC, I/P-FG:2kVAC, O/P-F/G: 0.7kVDC
Working temperature	-40~+70°C (refer to output derating curve)
Safety standards	UL60950-1, TUV EN60950-1 approved
EMC standards	EN55022 class B, EN61000-3-2,3, EN61000-4-2,3,4,5,6,8,11, EN61000-6-2 heavy industry level
Connection	Postronic PCIM34W13M400A
Dimension(LxWxH)	295x 127x 41mm (483.6x 350.8x 44mm for RKP-1U)
Case No.	974A (959A for RKP-1U)
Packing	2kg (RCP-2000, single unit); 4.18kg (RKP-1U, single empty rack)

❖ Single unit — 2000W

Model No.	Output	Tol.	R&N	Effi.
RCP-2000-12	12V, 0~100A	±2%	150mV	86.0%
RCP-2000-24	24V, 0~80A	±1%	200mV	90.5%
RCP-2000-48	48V, 0~42A	±1%	300mV	92.0%

Order Information

Single Unit: RCP-2000-12

- 12 — Output voltage(12V/24V/48V)

Rack: RKP-1U I - CMU1

- CMU1: with RKP-CMU1
- —: without RKP-CMU1
- I : AC inlet(IEC320-C20)
- T : Terminal block

Control and Monitor Unit for RCP-2000

RKP-CMU1

CASE:959A
147.5x 127x 41 mm

RKP-1U☐-CMU1

CASE: 959D
486.6x 350.8x 44 mm

- 1U low profile
- 19-inch rack mounting
- Control and monitor up to 32 RCP-2000 units
- Front panel LCD and buttons for on-site service without PC
- Alarm/event log with time and date
- Easy wire connections on rear side
- Windows-based PC communication software
- USB, RS-232 or Ethernet interface for PC connection locally or remote monitoring and control via GSM modem
- 4 user programmable relay outputs for traditional remote or warning
- 3 years warranty

DC input voltage range ..... 12~15VDC
DC input current ..... 1A at 12VDC, 0.8A at 15VDC
Output relay contact ..... 4 user programmable relay
Working temperature ..... -25~+70°C (refer to output derating curve)
Safety standards ..... UL60950-1, TUV EN60950-1 approved for RKP-1U☐-CMU1
Withstand voltage ..... I/P-O/P:3kVAC, I/P-FG:2kVAC, O/P-FG:0.7kVDC for RKP-1U☐-CMU1; O/P-FG:0.7kVDC for RKP-CMU1
Isolation resistance ..... I/P-O/P, I/P-FG, O/P-FG: 100M Ohms/500VDC for RKP-1U☐-CMU1; O/P-FG:100M Ohms/500VDC for RKP-CMU1
EMC standards ..... EN55022 class B, EN61000-3-2,3, EN61000-4-2,3,4,5,6,8,11, EN61000-6-1 light industry level

Model No.	Application
RKP-CMU1	Control and monitor RCP-2000 series (single unit of RKP-CMU1)
RKP-1U☐-CMU1	Control and monitor RCP-2000 series (19" rack with RKP-CMU1)

Modular Series 450W/650W/1000W Configurable Power

MP450 (450W, 5 SLOT) MP650 (650W, 5 SLOT) MP1K0 (1000W, 7 SLOT)

MS-75 MS-150 MS-210 MS-300 MS-360 MD-100

Description

Modular series are switching power supplies with modular design that consist of two stages: front-end PFC and output modules. With the power factor correction, the line input is rectified into high DC voltage (around 390VDC) by the front-end PFC stage, and then the DC output modules will transfer the operating voltage into all kinds of DC output voltages from 1.6V~53V. Right now we offer 75W, 150W, 210W, 300W, 360W single output modules and 100W dual output modules to fulfill all kinds of applications up to 14 isolated outputs.

There are millions of combinations available for the Modular Series. Users can configure the DC outputs and get the fastest solution for their own power requirement with safety and EMC certificates. No NRE / safety application charges and long period of waiting for certificates! Providing standard products as usual, MEAN WELL offers you a revolutionary standard power solution that fulfills your custom-made request!

Output Configuration Guide

MP □-□ □ □ □ □ □ □ □-□

SLOT 1 SLOT 2 SLOT 3 SLOT 4 SLOT 5 SLOT 6 SLOT 7

Parallel or option code

For MP1K0 only

Max. output wattage (450 / 650 / 1K0)

Modular Power with PFC

Example:

MP650-1A 2 E H U

SLOT5-O/P:24V@2.5A, 5V@8A

SLOT4-O/P:24V@6.5A

SLOT2,3-O/P:12V@25A

SLOT 1-O/P:2V@35A

Features

- Millions of output configuration is available
- Universal AC input / Full range
- Built-in active PFC compliance to EN61000-3-2
- Built-in constant current limiting circuit for single output modules
- Remote control on each output module
- Remote sense on each single output module (MS-75 / 150 / 210 / 300 / 360)
- Short circuit / Overload / Over voltage protections for all modules
- Parallel function for MS-210 (up to 5 units), MS-300/360 (up to 3 units)
- Margining control function (MS-210 / 360)
- Cooling by built-in DC fan with fan alarm function
- Additional 12V/0.1A auxiliary output for remote control
- 3 years warranty

General Specification (Please refer to www.meanwell.com for detail spec.)

Model No.	MP450	MP650	MP1K0
AC input voltage range	85~264VAC or 120~370VDC		
Power Factor	PF >0.95 / 230VAC, PF > 0.98 / 115VAC at full load		
AC inrush current (max.)	Cold start, 40A at 230VAC	Cold start, 50A at 230VAC	Cold start, 40A at 230VAC
Max output voltage	450W	650W	1000W
Efficiency (typical)	82.5%	84%	84%
Over temperature protection	Output shutdown, auto-recovery		
Fan alarm	Output shutdown when fan malfunctions		
Withstand voltage	I/P-O/P: 3kVAC, I/P-FG: 2kVAC, O/P-FG: 0.5kVAC, 1 minute		
Working temperature	-20~+50°C@100%, +70°C @ 50% load		
Safety standards	UL60950-1, TUV EN60950-1 approved		
EMC standards	EN55022 class B, EN61000-3-2,3, EN61000-4-2,3,4,5,6,8,11, EN55024 light industry level, criteria A		
Connection	Input side: 3P/10mm pitch terminal block & JST B3B-XH		
Dimension (LxWxH)(mm)	254x 127x 63.5	278x 127x 63.5	278x 177.8x 63.5

Modular Series

MS-75: 1-SLOT single output (75W max.)

Item Code	Output	★Peak I	Vdc adj.	Tol.	R&N.
L	3.3V, 0~15A	17.3A	2.6~4.0V	±2%	80mV
M	5V, 0~15A	17.3A	4.0~6.0V	±2%	80mV
N	12V, 0~6.3A	7.30A	9.0~13.2V	±1%	150mV
O	15V, 0~5.0A	5.80A	13.2~16.8V	±1%	150mV
P	24V, 0~3.2A	3.70A	20.0~26.4V	±1%	150mV
Q	48V, 0~1.6A	1.80A	40.0~53.0V	±1%	250mV

MS-150: 1-SLOT single output (150W max.)

Item Code	Output	★Peak I	Vdc adj.	Tol.	R&N.
A	2V, 0~25A	30.0A	1.6~2.6V	±3%	50mV
B	3.3V, 0~25A	30.0A	2.6~4.0V	±2%	80mV
C	5V, 0~25A	30.0A	4.0~6.0V	±2%	80mV
D	7.5V, 0~18A	20.7A	6.0~9.0V	±2%	100mV
E	12V, 0~13A	15.0A	9.0~13.2V	±1%	150mV
F	15V, 0~10A	11.5A	13.2~16.8V	±1%	150mV
G	18V, 0~8.5A	9.80A	16.8~20.0V	±1%	150mV
H	24V, 0~6.5A	7.50A	20.0~26.4V	±1%	150mV
I	27V, 0~5.8A	6.70A	25.0~31.0V	±1%	150mV
J	33V, 0~4.7A	5.40A	30.0~40.0V	±1%	250mV
K	48V, 0~3.2A	3.68A	40.0~53.0V	±1%	250mV

MS-210: 1-SLOT parallelable single output (210W max.)

Item Code	Output	★Peak I	Vdc adj.	Tol.	R&N.
1A	2V, 0~35A	38.5A	1.6~2.6V	±3%	70mV
1B	3.3V, 0~35A	38.5A	2.6~4.0V	±2%	80mV
1C	5V, 0~35A	38.5A	4.0~6.0V	±2%	80mV
1D	7.5V, 0~28A	32.2A	6.0~9.0V	±2%	100mV
1E	12V, 0~17.5A	20.1A	9.0~13.2V	±1%	150mV
1F	15V, 0~14A	16.1A	13.2~16.8V	±1%	150mV
1G	18V, 0~11.6A	13.4A	16.8~20.0V	±1%	150mV
1H	24V, 0~8.75A	10.1A	20.0~26.4V	±1%	150mV
1I	27V, 0~7.8A	9.00A	25.0~31.0V	±1%	150mV
1J	33V, 0~6.4A	7.40A	30.0~40.0V	±1%	250mV
1K	48V, 0~4.4A	5.10A	40.0~53.0V	±1%	250mV

MS-300: 2-SLOT parallelable single output (300W max.)

Item Code	Output	★Peak I	Vdc adj.	Tol.	R&N.
2A	2V, 0~50A	57.5A	1.6~2.6V	±3%	80mV
2B	3.3V, 0~50A	57.5A	2.6~4.0V	±2%	80mV
2C	5V, 0~50A	57.5A	4.0~6.0V	±2%	80mV
2D	7.5V, 0~40A	46.0A	6.0~9.0V	±2%	100mV
2E	12V, 0~25A	29.0A	9.0~13.2V	±1%	150mV
2F	15V, 0~20A	23.0A	13.2~16.8V	±1%	150mV
2G	18V, 0~16.7A	19.2A	16.8~20.0V	±1%	150mV
2H	24V, 0~12.5A	14.4A	20.0~26.4V	±1%	150mV
2I	27V, 0~11.2A	12.9A	25.0~31.0V	±1%	200mV
2J	33V, 0~9.1A	10.5A	30.0~40.0V	±1%	250mV
2K	48V, 0~6.3A	7.2A	40.0~53.0V	±1%	300mV

MS-360: 2-SLOT parallelable single output (360W max.)

Item Code	Output	★Peak I	Vdc adj.	Tol.	R&N.
3A	2V, 0~60A	69.0A	1.6~2.6V	±3%	80mV
3B	3.3V, 0~60A	69.0A	2.6~4.0V	±2%	100mV
3C	5V, 0~60A	69.0A	4.0~6.0V	±2%	100mV
3D	7.5V, 0~48A	55.2A	6.0~9.0V	±2%	100mV
3E	12V, 0~30A	34.5A	9.0~13.2V	±1%	150mV
3F	15V, 0~24A	27.6A	13.2~16.8V	±1%	150mV
3G	18V, 0~20A	23.0A	16.8~20.0V	±1%	150mV
3H	24V, 0~15A	17.3A	20.0~26.4V	±1%	150mV
3I	27V, 0~13.4A	15.5A	25.0~31.0V	±1%	200mV
3J	33V, 0~11A	12.7A	30.0~40.0V	±1%	250mV
3K	48V, 0~7.5A	8.7A	40.0~53.0V	±1%	300mV

MD-100: 1-SLOT isolated dual output (100W max.)

Item Code	Output	Vdc adj.	Tol.	R&N.	Max.
R	5V, 2.0~10A	4.75~5.5V	±3%	100mV	90.0W
	5V, 0.0~8.0A	4.75~5.5V	±3%	100mV	
S	5V, 2.0~10A	4.75~5.5V	±3%	100mV	100.4W
	12V, 0.0~5.8A	11.4~13.2V	±3%	150mV	
T	5V, 2.0~10A	4.75~5.5V	±3%	100mV	101.0W
	15V, 0.0~4.7A	14.2~16.5V	±3%	150mV	
U	24V, 0.5~3.0A	22.8~26.4V	±3%	200mV	100.0W
	5V, 0.0~10A	4.75~5.5V	±3%	100mV	
V	24V, 0.6~3.0A	22.8~26.4V	±2%	240mV	100.8W
	12V, 0.0~4.7A	11.4~13.2V	±3%	120mV	
W	12V, 1.0~5.0A	11.4~13.2V	±2%	120mV	100.8W
	12V, 0.0~5.8A	11.4~13.2V	±3%	120mV	
X	15V, 1.0~4.7A	14.2~16.5V	±2%	150mV	100.5W
	15V, 0.0~4.7A	14.2~16.5V	±3%	150mV	

Parallel Connection Accessory

FAP-001 (For MS-300, 2 units)	
FAP-002 (For MS-300, 3 units)	
FAP-003 (For MS-210, 2 units)	
FAP-004 (For MS-210, 3 units)	
FAP-005 (For MS-210, 4 units)	
FAP-006 (For MS-210, 5 units)	
FAP-007 (For MS-360, 2 units)	
FAP-008 (For MS-360, 3 units)	

Series Connection Accessory

FAS-001 (For 1-slot modules: MS-75/150, MD-100)	
FAS-002 (For 2-slot modules: MS-300)	
FAS-003 (For 1-slot modules: MS-210)	
FAS-004 (For 2-slot modules: MS-360)	

★Peak I: 35% duty cycle maximum within every 10 seconds. Average output power should not exceed the rated power.

★Please use MP450-CNPOQ, MP650-1A2EHU, MP1K0-2C2CEKL-1.....etc. as the order code. For more detail information about technical issues, please refer to the user manual.

★Please refer to the user manual for more detail information about parallel connection and the parallel codes. About series connection, please contact us or your local MEAN WELL distributor for more details.

LED Sign Panel

200 ~ 400W Economical Low Profile

350W Single Output

CB (except for 12V)

- AC input 180~264VAC only
- Withstand 300VAC surge input for 5 sec
- Semi-potted and design against rain splash
- High efficiency up to 90%
- Protections: Short circuit / Overload / Over voltage / Over temperature
- Cooling by free air convection
- LED indicator for power on
- Suitable for channel letter applications
- 3 years warranty

AC input voltage range ..... 180~264VAC; 254~370VDC
AC inrush current ..... Cold start, 90A at 230VAC
DC adjustment range ..... ±10% rated output voltage
Overload protection ..... 110%~160% hiccup mode, auto-recovery
Over voltage protection ..... 12V: 13.8~16.2V; 24V: 27.6~32.4V; 36V: 41.4~46.8V; 48V: 57.6~67.2V hiccup mode, auto-recovery
Setup, rise, hold up time .....1500ms, 200ms, 20ms at full load and 230VAC
Withstand voltage .....I/P-O/P: 3kVAC, I/P-FG: 2kVAC, O/P-FG: 0.5kVAC
Working temperature ..... -30~+60°C (refer to output derating curve)
Safety standards ..... UL60950-1, CQC GB4943.1 approved

Model No.	Output	Tol.	R&N	Effi.
ERP-350-12	12V, 0~26.7A	±1%	150mV	87%
ERP-350-24	24V, 0~14.6A	±1%	150mV	89%
ERP-350-36	36V, 0~9.7A	±1%	240mV	90%
ERP-350-48	48V, 0~7.3A	±1%	240mV	90%

200W & 300W Single Output

- 115VAC or 230VAC AC input
- Cooling by conduction
- 1U low profile: 31mm
- Conformal coating
- Protections: Short circuit / Overload / Over voltage / Over temperature
- LED indicator for power on
- 2 years warranty

AC input voltage range ..... 90~132VAC(A-Type); 180~264VAC(B-Type)
AC inrush current ..... Cold start, 80A(HSN-200); 90A(HSN-300)at 230VAC
DC adjustment range ..... 4.2V:3.6~4.4V; 5V:4.5~5.5V
Overload protection ..... 105%~185% hiccup mode, auto-recovery
Over voltage protection ..... 4.2V: 4.6~5.4V, 5V: 5.7~7.0V for HSN-200; 4.2V: 4.7~5.7V, 5V: 5.7~7.0V for HSN-300
Setup, rise, hold up time ..... 1500ms, 100ms, 20ms at 230VAC and full load (HSN-200) 2500ms, 100ms, 10ms at 230VAC and full load (HSN-300)
Withstand voltage ..... I/P-O/P: 3kVAC, I/P-FG: 2kVAC, O/P-FG: 0.5kVAC
Working temperature ..... -25~+70°C (HSN-200); -20~+70°C (HSN-300)
Safety standards ..... UL60950-1 approved

❖ HSN-200 Series

Model No.	Output	Tol.	R&N	Effi.
HSN-200-4.2A	4.2V, 0~30A	±2%	150mV	86.5%
HSN-200-4.2B	4.2V, 0~40A	±2%	150mV	88%
HSN-200-5A	5V, 0~30A	±2%	150mV	86.5%
HSN-200-5B	5V, 0~40A	±2%	150mV	88%

❖ HSN-300 Series

Model No.	Output	Tol.	R&N	Effi.
HSN-300-4.2A	4.2V, 0~50A	±3%	150mV	85%
HSN-300-4.2B	4.2V, 0~60A	±3%	150mV	85%
HSN-300-5A	5V, 0~50A	±3%	150mV	86%
HSN-300-5B	5V, 0~60A	±3%	150mV	86%

200W Single Output

- AC input 180~264VAC only
- Withstand 300VAC surge input for 5 sec
- Conformal coating
- High efficiency up to 87% (NEL-200)
- Protections: Short circuit / Overload / Over voltage / Over temperature
- Cooling by free air convection
- 1U low profile: 30mm
- LED indicator for power on
- Suitable for moving sign applications
- 2 years warranty

AC input voltage range ..... 180~264VAC; 254~370VDC
AC inrush current ..... Cold start, 70A at 230VAC
DC adjustment range ..... 2.8V:2.5~3V; 4.2V:3.6~4.4V; 5V:4.5~5.5V
Overload protection ..... 105%~140% hiccup mode, auto-recovery
Over voltage protection ..... 2.8V: 3.22~3.78V; 4.2V: 4.6~5.4V; 5V: 5.6~7V hiccup mode, auto-recovery
Setup, rise, hold up time ..... 2500ms, 50ms, 20ms at full load and 230VAC
Withstand voltage ..... I/P-O/P: 3kVAC, I/P-FG: 2kVAC, O/P-FG: 0.5kVAC
Working temperature ..... -20~+60°C (refer to output derating curve)
Safety standards ..... UL60950-1 approved

Model No.	Output	Tol.	R&N	Effi.
NEL-200-2.8	2.8V, 0~40A	+3%, -4.5%	150mV	85%
NEL-200-4.2	4.2V, 0~40A	+3%, -4.5%	150mV	87%
NEL-200-5	5V, 0~40A	±3%	150mV	87%

300W & 400W Single Output

- AC input 180~264VAC only
- Withstand 300VAC surge input for 5 seconds
- Conformal coating
- High efficiency up to 86% (NEL-300) High efficiency up to 84% (NEL-400)
- 1U low profile: 30mm
- Protections: Short circuit / Overload / Over voltage / Over temperature
- Forced air cooling by built-in DC fan
- LED indicator for power on
- Suitable for moving sign applications
- 2 years warranty

AC input voltage range ..... 180~264VAC; 254~370VDC
AC inrush current ..... Cold start, 70A at 230VAC
DC adjustment range ..... 2.8V:2.5~3V; 4.2V:3.6~4.4V; 5V:4.5~5.5V
Overload protection ..... 105%~140% hiccup mode, auto-recovery
Over voltage protection ..... 2.8V: 3.22~3.78V; 4.2V: 4.6~5.4V; 5V: 5.6~7V hiccup mode, auto-recovery
Setup, rise, hold up time ..... 2500ms, 50ms, 20ms at full load and 230VAC
Withstand voltage ..... I/P-O/P: 3kVAC, I/P-FG: 2kVAC, O/P-FG: 0.5kVAC
Working temperature ..... -20~+60°C (refer to output derating curve)
Safety standards ..... UL60950-1 approved

❖ NEL-300 Series

Model No.	Output	Tol.	R&N	Effi.
NEL-300-2.8	2.8V, 0~60A	+3%, -4.5%	150mV	81%
NEL-300-4.2	4.2V, 0~60A	+3%, -4.5%	150mV	85%
NEL-300-5	5V, 0~60A	±3%	150mV	86%

❖ NEL-400 Series

Model No.	Output	Tol.	R&N	Effi.
NEL-400-2.8	2.8V, 0~80A	+3%, -4.5%	150mV	79%
NEL-400-4.2	4.2V, 0~80A	+3%, -4.5%	150mV	83%
NEL-400-5	5V, 0~80A	±3%	150mV	84%

LED Sign Panel

150~300W High Reliability Low Profile

150W & 200W Single Output with PFC Function

- Universal AC input / Full range
- Withstand 300VAC surge input for 5 seconds (HSP-150)
- Built-in active PFC function
- Conformal coating
- High efficiency up to 90%
- Protections: Short circuit / Overload / Over voltage / Over temperature
- Cooling by free air convection for 150W and 200W with 30CFM forced air(HSP-150); cooling by conduction(HSP-200)
- 1U low profile
- Built-in remote sense(HSP-150)
- LED indicator for power on
- Suitable for moving sign applications
- 3 years warranty

(HSP-200 only)

HSP-150
220x 62x 32 mm

HSP-200
210x 62x 31 mm

AC input voltage range ..... 90~264VAC; 127~370VDC
AC inrush current ..... Cold start, 70A at 230VAC
DC adjustment range ..... 2.5V: 2.35~2.75V, 3.8V: 3.4~4.2V, 5V: 4.5~5V (HSP-150); 4.2V: 3.6~4.4V, 5V: 4.5~5.5V (HSP-200)
Overload protection ..... 110%~180% hiccup mode, auto-recovery
Over voltage protection ..... 2.5V: 3.2~3.7V, 3.8V: 4.7~5.7V, 5V: 5.7~7V (HSP-150); 4.2V: 4.6~5.4V, 5V: 5.6~7V (HSP-200)
Setup, rise, hold up time ..... 2000ms, 100ms, 16ms at full load and 230VAC (HSP-150) 2000ms, 200ms, 16ms at full load and 230VAC (HSP-200)
Withstand voltage ..... I/P - O/P: 3kVAC, I/P-FG: 2kVAC, O/P-FG: 0.5kVAC
Working temperature ..... -30~+70°C (refer to output derating curve)
Safety standards ..... UL60950-1, TUV EN60950-1, CCC GB4943(HSP-200 only) approved
EMC standards ..... EN55022, GB9254(HSP-200 only), class B, EN61000-3-3, EN61000-4-2,3,4,5,6,8,11

❖ HSP-150 Series

Model No.	Output(Rated/Peak)	Tol.	R&N	Effi.
HSP-150-2.5	2.5V, 0~30A / 40A	±2%	80mV	86%
HSP-150-3.8	3.8V, 0~30A / 40A	±2%	100mV	88%
HSP-150-5	5V, 0~30A / 40A	±2%	100mV	90%

❖ HSP-200 Series

Model No.	Output	Tol.	R&N	Effi.
HSP-200-4.2	4.2V, 0~40A	±2%	150mV	88.0%
HSP-200-5	5V, 0~40A	±2%	150mV	88.5%

250W Single Output with PFC Function

199x 105x 41 mm

- Universal AC input / Full range
- Built-in active PFC function
- Conformal coating
- High efficiency up to 87%
- Protections: Short circuit / Overload / Over voltage / Over temperature
- Forced air cooling by built-in DC fan
- 1U low profile: 41mm
- Built-in remote sense function
- LED indicator for power on
- Suitable for moving sign applications
- 3 years warranty

AC input voltage range ..... 85~264VAC; 120~370VDC
DC adjustment range ..... 2.5V: 2.3~2.8V; 3.6V: 3.24~3.96V; 5V: 4.5~5.5V
AC inrush current ..... Cold start, 70A at 230VAC
Overload protection ..... 105%~135% hiccup mode, auto-recovery
Over voltage protection ..... 2.5V: 2.88~3.38V; 3.6V:4.14~4.86V; 5V: 5.75~6.75V shut down O/P voltage, re-power on to recover
Setup, rise, hold up time ..... 3000ms, 50ms, 16ms at full load and 230VAC
Withstand voltage ..... I/P - O/P: 3kVAC, I/P-FG: 2kVAC, O/P-FG: 0.5kVAC
Working temperature ..... -40~+70°C (refer to output derating curve)
Safety standards ..... UL60950-1, TUV EN60950-1 approved
EMC standards ..... EN55022 class B, EN61000-3-2,3, EN55024, EN61000-4-2,3,4,5,6,8,11, EN61000-6-2

Model No.	Output	Tol.	R&N	Effi.
HSP-250-2.5	2.5V, 0~50A	±2%	100mV	79%
HSP-250-3.6	3.6V, 0~50A	±2%	100mV	83%
HSP-250-5	5V, 0~50A	±2%	100mV	87%

300W Single Output with PFC Function

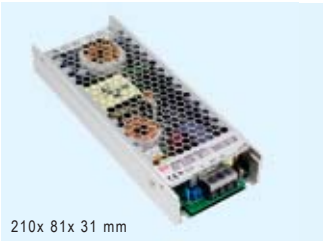

210x 81x 31 mm

- Universal AC input / Full range
- Withstand 300VAC surge input for 5 seconds
- Built-in active PFC function
- Conformal coating
- High efficiency up to 87%
- Protections: Short circuit / Overload / Over voltage / Over temperature
- Cooling by conduction
- 1U low profile: 31mm
- LED indicator for power on
- Suitable for moving sign applications
- 3 years warranty

AC input voltage range ..... 180~264VAC; 254~370VDC or 90~135VAC; 127~190VDC
DC adjustment range ..... 2.8V: 2.5~3V; 4.2V: 3.6~4.4V; 5V: 4.5~5.5V
AC inrush current ..... Cold start, 60A at 230VAC
Overload protection ..... 105%~150% hiccup mode, auto-recovery
Over voltage protection ..... 2.8V: 3.22~3.78V; 4.2V: 4.6~5.4V; 5V: 5.7~7.0V shut down O/P voltage, re-power on to recover
Setup, rise, hold up time ..... 2000ms, 100ms, 8ms at full load and 230VAC
Withstand voltage ..... I/P - O/P: 3kVAC, I/P-FG: 2kVAC, O/P-FG: 0.5kVAC
Working temperature ..... -30~+70°C (refer to output derating curve)
Safety standards ..... UL60950-1, TUV EN60950-1, CCC GB4943 approved
EMC standards ..... EN55022, GB9254, class B, EN61000-3-2,3, EN61000-4-2,3,4,5,6,8,11

Model No.	Output	Tol.	R&N	Effi.
HSP-300-2.8	2.8V, 0~60A	±2%	110mV	80%
HSP-300-4.2	4.2V, 0~60A	±2%	150mV	85%
HSP-300-5	5V, 0~60A	±2%	150mV	87%

190W & 240W Dual Output with PFC Function

HDP-240
215x 115x 36 mm

HDP-190
215x 115x 36 mm

- Universal AC input / Full range
- Built-in active PFC function
- Conformal coating
- High efficiency up to 86%
- Protections: Short circuit / Overload / Over voltage / Over temperature
- Fanless design (HDP-190); Forced air cooling by built-in DC fan (HDP-240)
- 1U low profile: 36mm
- Suitable for moving sign applications
- 3 years warranty

AC input voltage range ..... 90~264VAC, 127~370VDC
DC adjustment range ..... V1: 3.6~4V; V2: 2.5~3V
AC inrush current ..... Cold start, 45A at 230VAC
Overload protection ..... V1+V2: 105%~150%, V2: 125%~170% hiccup mode, auto-recovery
Over voltage protection ..... V1: 4.37~5.13V, V2: 3.22~3.78V shut down O/P voltage, re-power on to recover
Setup, rise, hold up time ..... 1000ms, 50ms, 16ms at full load and 230VAC
Withstand voltage ..... I/P - O/P: 3kVAC, I/P-FG: 2kVAC, O/P-FG: 0.5kVAC
Working temperature ..... -30~+70°C (refer to output derating curve)
Safety standards ..... UL60950-1, TUV EN60950-1, CCC GB4943 approved
EMC standards ..... EN55022, GB9254, class B, EN61000-3-2,3, EN61000-4-2,3,4,5,6,8,11, EN61000-6-2
Packing ..... 0.95kg ; 15pcs / 15.3kg / 0.7CUFT (HDP-190) 1kg ; 15pcs / 16kg / 0.7CUFT (HDP-240)

❖ HDP-190 Series

Model No.	Output	Tol.	R&N	Effi.	Max.
HDP-190	3.8V, 0~40A	±2%	100mV	86%	192W
	2.8V, 0~22A	±2%	100mV		

❖ HDP-240 Series

Model No.	Output	Tol.	R&N	Effi.	Max.
HDP-240	3.8V, 0~50A	±2%	100mV	84%	241W
	2.8V, 0~27.5A	±2%	100mV		

Harsh Environment

100~185W Single Output

Features

- Universal AC input 90~305VAC
- Built-in active PFC function
- High efficiency up to 94%
- Fanless design, cooling by free air convection
- -55~+70°C wide operating range
- Meet 6kV surge immunity level
- Withstand 10G vibration test
- Operating altitude up to 5000 meters
- Protections:
  Short circuit / Overload / Over voltage / Over temperature
- Multiple models for choice:
  A-Type: IP65 rated, Vo and Io can be adjusted through internal potentiometer
  Blank-Type(option): IP68 rated, Vo and Io fixed
- Suitable for general industrial applications at high/low temperature, high dust, high moisture, high vibration, high salt or outdoor environment
- 6 years warranty

General Specification (Please refer to www.meanwell.com for detail spec.)

Model No.		HEP-100	HEP-150	HEP-185
AC input voltage range		90~305VAC, 127~431VDC		
AC inrush current (max.)		Cold start, 60A at 230VAC	Cold start, 65A at 230VAC	
DC adjustment range		Vo: -10%~+10% by potentiometer (A-Type only) Io: to 60%~100% of rated output current adjustment by potentiometer(A-Type only)		Vo: -10%~+10% by potentiometer (A-Type only) Io: to 50%~100% of rated output current by potentiometer(A-Type only)
Overload protection		105%~125% constant current limiting, auto-recovery		
Over voltage protection		108%~135% rated output voltage		
Setup, rise, hold up time		500ms, 50ms, 16ms at full load and 230VAC		
Withstand voltage		I/P-O/P: 3.75kVAC, I/P-FG: 2kVAC, O/P-FG: 1.5kVAC		
Working temperature		-55~+70°C (refer to output derating curve)		
Safety standards		UL60950-1 approved ; Design refer to TUV EN60950-1		
EMC standards		EN55022 class B, EN61000-3-2,3, EN61000-4-2,3,4,5,6,8,11		
Connection	Input	UL rated, SJTW 18AWGx3C(30cm)		
	Output	SJTW 14AWGx2C(30cm)		
Dimension (LxWxH)(mm)		220x 68x 38.8	228x 68x 38.8	

100W — HEP-100

Model No.	Output	Tol.	R&N	Effi.
HEP-100-12[A]	12V, 0~8.34A	±1.0%	120mV	92%
HEP-100-15[A]	15V, 0~6.67A	±1.0%	150mV	92%
HEP-100-24[A]	24V, 0~4.00A	±1.0%	150mV	93%
HEP-100-36[A]	36V, 0~2.65A	±1.0%	200mV	93%
HEP-100-48[A]	48V, 0~2.00A	±1.0%	200mV	93%
HEP-100-54[A]	54V, 0~1.77A	±1.0%	200mV	93%

[ ] = A or Blank, A: standard model(IP65), Blank: optional model(IP68)

150W — HEP-150

Model No.	Output	Tol.	R&N	Effi.
HEP-150-12[A]	12V, 0~12.5A	±2.5%	150mV	91.5%
HEP-150-15[A]	15V, 0~10.0A	±2.0%	150mV	92.0%
HEP-150-24[A]	24V, 0~6.30A	±1.0%	150mV	93.0%
HEP-150-36[A]	36V, 0~4.20A	±1.0%	200mV	93.5%
HEP-150-48[A]	48V, 0~3.20A	±1.0%	200mV	94.0%
HEP-150-54[A]	54V, 0~2.80A	±1.0%	200mV	94.0%

[ ] = A or Blank, A: standard model(IP65), Blank: optional model(IP68)

185W — HEP-185

Model No.	Output	Tol.	R&N	Effi.
HEP-185-12[A]	12V, 0~13.0A	±2.5%	150mV	91.5%
HEP-185-15[A]	15V, 0~11.5A	±2.0%	150mV	92.0%
HEP-185-24[A]	24V, 0~7.80A	±1.0%	150mV	93.5%
HEP-185-36[A]	36V, 0~5.20A	±1.0%	200mV	93.5%
HEP-185-48[A]	48V, 0~3.90A	±1.0%	200mV	94.0%
HEP-185-54[A]	54V, 0~3.45A	±1.0%	200mV	94.0%

[ ] = A or Blank, A: standard model(IP65), Blank: optional model(IP68)

Best products also need best service.
We have authorized distributors all over the world. They have sufficient stock for your prompt delivery. Also they can offer you technical support & RMA services. Please contact your local distributors for more product information. You can also contact us at info@meanwell.com for information of your local distributors.

Harsh Environment

240~600W Single Output

Features

- Universal AC input 90~305VAC
- Built-in active PFC function
- No load power consumption <0.5W at remote OFF(HEP-600)
- High efficiency up to 96%
- Fanless design, cooling by free air convection
- -55~+70°C wide operating range (HEP-240/320); -40~+70°C wide operating range (HEP-600)
- Meet 6kV surge immunity level (HEP-240/320)
- Withstand 10G vibration test
- Operating altitude up to 5000 meters
- Protections: Short circuit / Overload / Over voltage / Over temperature
- Multiple models for choice (HEP-240/320):
  A-Type: IP65 rated, Vo and Io can be adjusted through internal potentiometer
  Blank-Type(option): IP68 rated, Vo and Io fixed
- Suitable for general industrial applications at high/low temperature, high dust, high moisture, high vibration, high salt or outdoor environment
- 6 years warranty

General Specification (Please refer to www.meanwell.com for detail spec.)

Model No.		HEP-240	HEP-320	HEP-600
AC input voltage range		90~305VAC; 127~431VDC		
AC inrush current (max.)		Cold start, 75A at 230VAC	Cold start, 70A at 230VAC	
DC adjustment range		Vo: -10%~+10% by potentiometer (A-Type only) Io: to 50%~100% of rated output current by potentiometer (A-Type only)		Vo: -15%~+5% by potentiometer Io: to 50%~100% of rated output current by potentiometer
Overload protection		105%~125% hiccup mode, auto-recovery		105%~125% constant current limiting, auto-recovery
Over voltage protection		108%~135% rated output voltage		
Setup, rise, hold up time		500ms, 80ms, 15ms at full load and 230VAC		
Withstand voltage		I/P-O/P: 3.75kVAC, I/P-FG: 2kVAC, O/P-FG: 1.5kVAC		
Working temperature		-55~+70°C (refer to output derating curve)		-40~+70°C(refer to output derating curve)
Safety standards		UL60950-1 approved ; Design refer to TUV EN60950-1		UL60950-1, TUV EN60950-1 approved
EMC standards		EN55022 class B, EN61000-3-2,3, EN61000-4-2,3,4,5,6,8,11		
Connection	Input	UL rated, SJTW 18AWGx3C (30cm)		3+7P / 11mm pitch terminal block with cover
	Output	SJTW 14AWGx2C (30cm)		
Dimension (LxWxH)(mm)		244.2x 68x 38.8	252x 90x 43.8	280x 144x 48.5

HEP-240 Series

NEW

Model No.	Output	Tol.	R&N	Effi.
HEP-240-12[A]	12V, 0~16.0A	±2.5%	150mV	90.0%
HEP-240-15[A]	15V, 0~15.0A	±2.0%	150mV	90.0%
HEP-240-24[A]	24V, 0~10.0A	±1.0%	150mV	92.5%
HEP-240-36[A]	36V, 0~6.70A	±1.0%	250mV	92.5%
HEP-240-48[A]	48V, 0~5.00A	±1.0%	250mV	93.0%
HEP-240-54[A]	54V, 0~4.45A	±1.0%	350mV	93.5%

[ ] = A or Blank, A: standard model(IP65), Blank: optional model(IP68)

HEP-320 Series

NEW

Model No.	Output	Tol.	R&N	Effi.
HEP-320-12[A]	12V, 0~22.0A	±3.0%	150mV	91.0%
HEP-320-15[A]	15V, 0~19.0A	±2.0%	150mV	92.5%
HEP-320-24[A]	24V, 0~13.34A	±1.0%	150mV	94.0%
HEP-320-36[A]	36V, 0~8.90A	±1.0%	250mV	94.0%
HEP-320-48[A]	48V, 0~6.70A	±1.0%	250mV	94.5%
HEP-320-54[A]	54V, 0~5.95A	±1.0%	350mV	94.5%

[ ] = A or Blank, A: standard model(IP65), Blank: optional model(IP68)

HEP-600 Series

Model No.	Output	Tol.	R&N	Effi.
HEP-600-12	12V, 0~40A	±3.0%	150mV	93.0%
HEP-600-15	15V, 0~36A	±2.0%	150mV	94.0%
HEP-600-20	20V, 0~28A	±1.5%	150mV	95.0%
HEP-600-24	24V, 0~25A	±1.0%	150mV	95.0%
HEP-600-30	30V, 0~20A	±1.0%	200mV	95.5%
HEP-600-36	36V, 0~16.7A	±1.0%	250mV	95.5%
HEP-600-42	42V, 0~14.3A	±1.0%	250mV	96.0%
HEP-600-48	48V, 0~12.5A	±1.0%	250mV	96.0%
HEP-600-54	54V, 0~11.2A	±1.0%	350mV	96.0%

To satisfy customers is our goal —
- High Quality
- Low Cost
- Prompt Delivery
- Best Service

Security Series

40~100W Single Output

Features

- Single output with battery charger (UPS function)
- Universal AC input / Full range
- Can be installed on DIN rail TS-35/7.5 or 15
- Protections: Short circuit / Overload /Over voltage / Battery low protection / Battery reverse polarity protection by fuse
- Alarm signal for AC OK and battery low
- Cooling by free air convection
- Pass LPS (DRC-40/60)
- LED indicator for power on
- 100% full load burn-in test
- 3 years warranty

General Specification (Please refer to www.meanwell.com for detail spec.)

Model No.	DRC-40	DRC-60	DRC-100
AC input voltage range	90~264VAC; 127~370VDC		
AC inrush current (max.)	Cold start, 30A at 115VAC, 60A at 230VAC		
DC adjustment range	CH1,13.8V: 12~15V; 27.6V:24~30V		
Overload protection	105%~150% hiccup mode, auto-recovery		
Over voltage protection	105%~135% rated output voltage		
Setup, rise, hold up time	400ms, 50ms, 50ms at full load and 230VAC		2400ms, 50ms, 50ms at full load and 230VAC
Withstand voltage	I/P-O/P:3kVAC, I/P-FG: 2kVAC, O/P-FG: 0.5kVAC		
Working temperature	-30~+70°C (refer to output derating curve)		
Safety standards	UL60950-1, TUV EN60950-1 approved		
EMC standards	EN55022 class B, EN61000-3-2,3, EN61000-4-2,3,4,5,6,8,11		
Connection (screw DIN terminal)	I/P:3 poles, O/P: 8 poles		I/P:3 poles, O/P: 10 poles
Case No.	962A		973A
Dimension (LxWxH)(mm)	40x 90x 100		55x 90x 100

40W — DRC-40

Model No.	Output	Tol.	R&N	Effi.	Max.
DRC-40A	13.8V, 0~2.9A	±1%	120mV	86%	40W
	13.8V, 0~1.0A	(Charger)			
DRC-40B	27.6V, 0~1.45A	±1%	200mV	87%	40W
	27.6V, 0~0.5A	(Charger)			

60W — DRC-60

Model No.	Output	Tol.	R&N	Effi.	Max.
DRC-60A	13.8V, 0~4.3A	±1%	120mV	86%	59W
	13.8V, 0~1.5A	(Charger)			
DRC-60B	27.6V, 0~2.15A	±1%	200mV	88%	59W
	27.6V, 0~0.75A	(Charger)			

100W — NEW DRC-100

Model No.	Output	Tol.	R&N	Effi.	Max.
DRC-100A	13.8V, 0~7A	±1%	120mV	87%	97W
	13.8V, 0~2.5A	(Charger)			
DRC-100B	27.6V, 0~3.5A	±1%	240mV	89%	97W
	27.6V, 0~1.25A	(Charger)			

48hrs delivery—
We keep enough stock for 95% of standard models at our 2400m² warehouse. We can arrange prompt delivery within 48hrs.

Customer Satisfaction —
Today's effort, tomorrow's reward. Continuously improve CQTS to satisfy customer is our goal.

Products —
- One Stop Shopping
- Total Solution

Best products also need best services.
We have authorized distributors all over the world. They have sufficient stock for your prompt delivery. Also they can offer you technical support & RMA services. Please contact your local distributors for more product information. You can also contact us at info@meanwell.com for information of your local distributors.

Security Series

35~160W Single Output

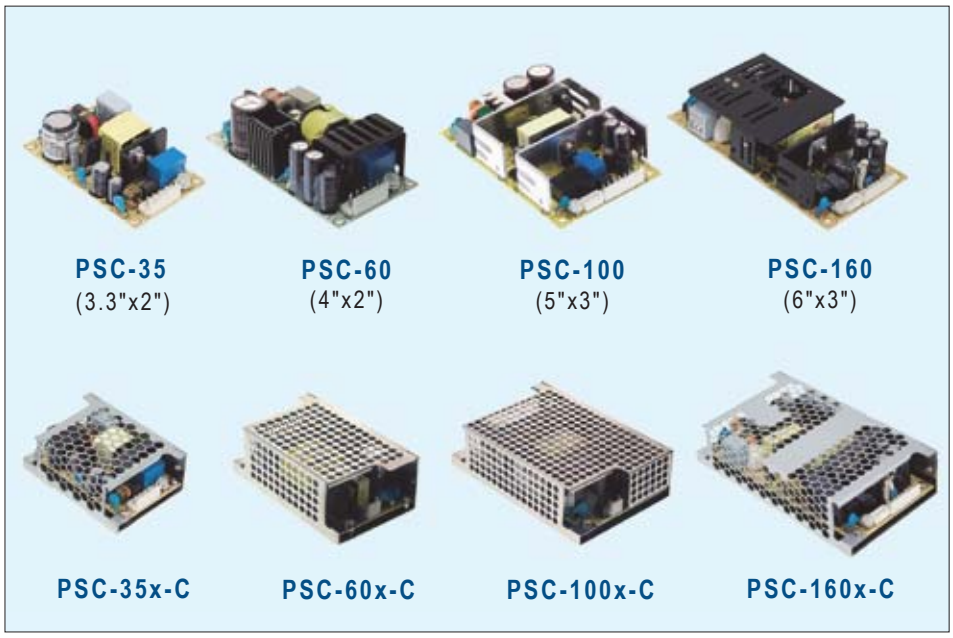

Features

- Single output with battery charger (UPS function)
- Universal AC input / Full range
- PCB and enclosed type with metal case available
- Compact size
- Built-in active PFC function (PSC-160)
- Protections: Short circuit / Overload / Over voltage
- Battery low protection / Battery reverse polarity protection by fuse
- Alarm signal for AC OK and battery low
- Cooling by free air convection
- 100% full load, burn-in test
- 2 years warranty

General Specification (Please refer to www.meanwell.com for detail spec.)

Model No.		PSC-35□	PSC-60□	PSC-100□	PSC-160□
AC input voltage range		90~264VAC; 127~370VDC			
AC inrush current (max.)		Cold start, 40A at 230VAC	60A at 230VAC	70A at 230VAC	
DC adjustment range		CH1, 13.8V: 12~15V; 27.6V: 24~29V			
Overload protection		105%~150% hiccup mode, auto-recovery			
Over voltage protection		CH1, 105%~135%, shut off, re-power on to recover	CH1, 105%~135%, hiccup mode, auto recovery	CH1, 105%~135%, shut off, re-power on to recover	
Withstand voltage		I/P-O/P:3kVAC, I/P-FG: 2kVAC, 1 minute	I/P-O/P:3kVAC, I/P-FG: 1.5kVAC, 1 minute		I/P-O/P:3kVAC, I/P-FG: 2kVAC, 1 minute
Working temperature		-30~+70°C	-20~+70°C (refer to output derating curve)		
Safety standards		UL60950-1, TUV EN60950-1 approved			
EMC standards		EN55022 class B, EN61000-3-2,3, EN61000-4-2,3,4,5,6,8,11			
Connection		3+6P/3.96mm pitch, JST: B3P/B6P-VH		3+8P/3.96mm pitch, 4P/2.5mm pitch, JST: B3P/B8P-VH, B4B-XH	
Dimension (LxWxH)(mm)	PCB Type	84.6x 50.8x 24	101.6x 50.8x 29	127x 76.2x 31	152.4x 76.2x 32
	Enclosed Type	86.4x 59.6x 30	103.4x 62x 37	130x 85x 37	155.4x 85x 37

35W — PSC-35

Model No.	Output	Tol.	R&N	Effi.	Max.
PSC-35A□	13.8V, 0~2.6A	±1%	120mV	84%	36W
	13.8V, 0~0.9A	(Charger)			
PSC-35B□	27.6V, 0~1.3A	±1%	240mV	86%	36W
	27.6V, 0~0.45A	(Charger)			

□ = blank, -C ; Blank: PCB Type, -C: Enclosed Type

100W — PSC-100

Model No.	Output	Tol.	R&N	Effi.	Max.
PSC-100A□	13.8V, 0~7.0A	±1%	100mV	86%	100W
	13.8V, 0~2.5A	(Charger)			
PSC-100B□	27.6V, 0~3.50A	±1%	100mV	88%	101W
	27.6V, 0~1.25A	(Charger)			

□ = blank, -C ; Blank: PCB Type, -C: Enclosed Type

60W — PSC-60

Model No.	Output	Tol.	R&N	Effi.	Max.
PSC-60A□	13.8V, 0~4.3A	±1%	120mV	84%	59W
	13.8V, 0~1.50A	(Charger)			
PSC-60B□	27.6V, 0~2.15A	±1%	240mV	84%	59W
	27.6V, 0~0.75A	(Charger)			

□ = blank, -C ; Blank: PCB Type, -C: Enclosed Type

160W — PSC-160

Model No.	Output	Tol.	R&N	Effi.	Max.
PSC-160A□	13.8V, 0~11.6A	±1%	150mV	88%	160W
	13.8V, 0~4A	(Charger)			
PSC-160B□	27.6V, 0~5.8A	±1%	240mV	90%	160W
	27.6V, 0~2A	(Charger)			

□ = blank, -C ; Blank: PCB Type, -C: Enclosed Type

Security Series 55~155W Single and Dual Output

55W 1~2 Output with Battery Charger

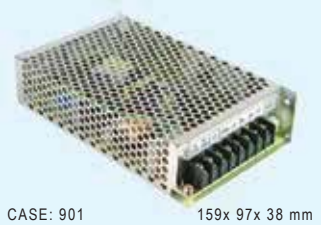

- Universal AC input / Full range
- Protections: Short circuit / Overload / Over voltage
- Battery low protection (except for ADS series)
- DC alarm signal (optional)
- Cooling by free air convection
- Fixed switching frequency at 45kHz
- Approvals: UL / CUL / TUV / CB / CE
- 100% full load burn-in test
- 2 years warranty

AC input voltage range ..... 88~264VAC; 124~370VDC
AC inrush current ..... Cold start, 20A at 115VAC, 40A at 230VAC
DC adjustment range ..... 12V, 24V: ±10%
13.8V: 12~14.5V; 27.6V: 24~29V
Overload protection ..... 105%~150% hiccup mode, auto-recovery
Over voltage protection ..... CH1: 105%~135% rated output voltage
Setup, rise, hold up time ..... 800ms, 50ms, 80ms at full load and 230VAC
Withstand voltage I/P-O/P:3kVAC, I/P-FG:1.5kVAC, 1minute
Working temperature ..... -10~+60°C (refer to output derating curve)
Safety standards ..... UL60950-1, TUV EN60950-1 approved
EMC standards ..... EN55022 class B, EN61000-3-2,3,
EN61000-4-2,3,4,5,6,8,11
Connection ..... 8P/ 8.25mm pitch terminal block
Packing ..... 0.57kg ; 24pcs / 13.7kg / 0.75CUFT

❖ Single Output with 5V, 4A DC-DC Converter

Model No.	Output	Tol.	R&N	Effi.	Max.
ADS-5512	12V, 0~4.0A	±1%	100mV	76%	51W
	5V, 0~4.0A	±3%	100mV		
ADS-5524	24V, 0~2.5A	±1%	100mV	79%	58W
	5V, 0~4.0A	±3%	100mV		

❖ Single Output with Battery Charger (UPS Function)

Model No.	Output	Tol.	R&N	Effi.	Max.
AD-55A	13.8V, 0~4.0A	±1%	100mV	71%	51W
	13.4V, 0~0.23A	(Charger)			
AD-55B	27.6V, 0~2.0A	±1%	100mV	74%	54W
	26.5V, 0~0.16A	(Charger)			

❖ Dual Output with Battery Charger (UPS Function)

Model No.	Output	Tol.	R&N	Effi.	Max.
ADD-55A	13.8V, 0~3.50A	±1%	100mV	71%	53W
	5V, 0~4.00A	±3%	100mV		
	13.4V, 0~0.23A	(Charger)			
ADD-55B	27.6V, 0~2.00A	±1%	150mV	74%	55W
	5V, 0~4.00A	±3%	150mV		
	26.5V, 0~0.16A	(Charger)			

Block Diagram

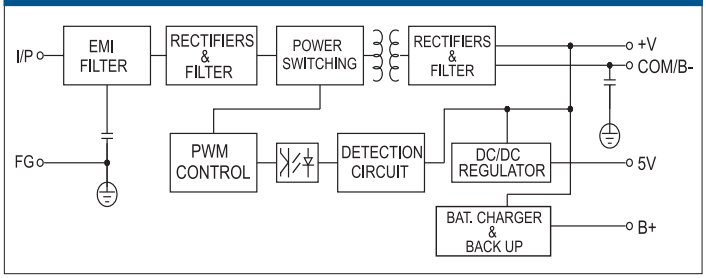

155W 1~2 Output with Battery Charger and PFC Function

- Universal AC input / Full range
- PF>0.92@230VAC and full load
- Protections: Short circuit / Overload / Over voltage
- Battery low protection (except for ADS series)
- Cooling by free air convection
- Fixed switching frequency at 134kHz
- Approvals: UL / CUL / TUV / CB / CE
- 100% full load burn-in test
- 2 years warranty

AC input voltage range ..... 88~264VAC; 124~370VDC
AC inrush current ..... Cold start, 20A at 115VAC, 40A at 230VAC
DC adjustment range ..... 12V, 24V, 48V: ±10%
13.8V: 12~14.5V; 27.6V: 24~29V; 54V: 48~58V
Overload protection ..... CH1,2: 105%~135%, charger: 0.51~0.9A;
constant current limiting, auto-recovery
Over voltage protection .... CH1: 115%~135% rated output voltage
Setup, rise, hold up time ... 1000ms, 90ms, 24ms at full load and 230VAC
Withstand voltage I/P-O/P:3kVAC, I/P-FG:1.5kVAC, 1minute
Working temperature ..... -10~+60°C (refer to output derating curve)
Safety standards ..... UL60950-1, TUV EN60950-1 approved
EMC standards ..... EN55022 class B, EN61000-3-2,3,
EN61000-4-2,3,4,5,6,8,11
Connection ..... 8P/ 9.5mm pitch terminal block
Packing ..... 1.0kg ; 16pcs / 16.0kg / 0.95CUFT

❖ Single Output with 5V, 3A DC-DC Converter

Model No.	Output	Tol.	R&N	Effi.	Max.
ADS-15512	12V, 0~12.5A	±2%	150mV	77%	153W
	5V, 0~3.00A	±3%	100mV		
ADS-15524	24V, 0~6.50A	±1%	150mV	82%	154W
	5V, 0~3.00A	±3%	100mV		
ADS-15548	48V, 0~3.20A	±1%	240mV	82%	154W
	5V, 0~3.00A	±5%	100mV		

❖ Single Output with Battery Charger (UPS Function)

Model No.	Output	Tol.	R&N	Effi.	Max.
AD-155A	13.8V, 0~11.5A	±2%	150mV	80%	152W
	13.3V, 0~0.50A	(Charger)			
AD-155B	27.6V, 0~5.50A	±1%	150mV	84%	152W
	27.1V, 0~0.50A	(Charger)			
AD-155C	54.0V, 0~2.70A	±1%	240mV	84%	157W
	53.5V, 0~0.50A	(Charger)			

❖ Dual Output with Battery Charger (UPS Function)

Model No.	Output	Tol.	R&N	Effi.	Max.
ADD-155A	13.8V, 0~10.5A	±1%	150mV	78%	153W
	5V, 0~3.00A	±3%	100mV		
	13.3V, 0~0.50A	(Charger)			
ADD-155B	27.6V, 0~5.00A	±1%	200mV	81%	153W
	5V, 0~3.00A	±3%	100mV		
	27.1V, 0~0.50A	(Charger)			
ADD-155C	54.0V, 0~2.50A	±1%	240mV	81%	150W
	5V, 0~3.00A	±5%	100mV		
	53.5V, 0~0.20A	(Charger)			

Security Series/ATX Power

35~75W Single Output

- Universal AC input / Full range
- Protections: Short circuit / Overload / Over voltage / Battery reverse polarity protection by fuse
- Cooling by free air convection
- No load power consumption <0.75W
- Suitable for installation in metallic or non-metallic system enclosure
- Temperature compensation function
- LED indicator for power on
- 2 years warranty

SCP-35 99x 97x 36 mm | **SCP-50** 129x 98x 38 mm | **SCP-75** 159x 97x 38 mm

AC input voltage range ..... 85~264VAC; 120~370VDC
DC adjustment range ..... 95%~115% rated output voltage
Overload protection ..... 120%~165%, hiccup mode, auto-recovery
Over voltage protection ..... 120%~140%, rated output voltage
Setup, rise, hold up time .... 500ms, 30ms, 50ms at full load and 230VAC
Withstand voltage ..... I/P-O/P: 3kVAC, I/P-FG:1.5kVAC, 1minute
Working temperature ..... -20~+60°C (refer to output derating curve)
Safety standards ..... UL60950-1 approved
EMC standards ..... EN55022 class B, EN61000-3-2,3, EN61000-4-2,3,4,5,6,8,11
Connection ..... I/P: 3 poles, O/P: 2 poles screw terminal

❖ SCP-35 Series

Model No.	Output	Tol.	R&N	Effi.	Max.
SCP-35-12	13.8V, 0~2.6A	±2%	120mV	83%	36W
SCP-35-24	27.6V, 0~1.4A	±1%	200mV	86%	39W

❖ SCP-50 Series

Model No.	Output	Tol.	R&N	Effi.	Max.
SCP-50-12	13.8V, 0~3.6A	±2%	120mV	81%	50W
SCP-50-24	27.6V, 0~1.8A	±1%	200mV	85%	50W

❖ SCP-75 Series

Model No.	Output	Tol.	R&N	Effi.	Max.
SCP-75-12	13.8V, 0~5.4A	±2%	120mV	81%	75W
SCP-75-24	27.6V, 0~2.7A	±1%	200mV	85%	75W

250~300W Industrial ATX PC Power Supply

- 240x 83x 40 mm (250W)
- 260x 83x 40 mm (300W)

- Universal AC input / Full range
- Low profile for 1U/2U rack system
- Built-in active PFC function
- Protections: Short circuit / Overload / Over voltage
- With power good and fail signal output
- Forced air cooling by built-in DC fan
- PS-ON signal input
- 2 years warranty

AC input voltage range ..... 90~264VAC, 127~370VDC
Setup, rise, hold up time ... 800ms, 20ms, 16ms at 230VAC
Overload protection ..... 105%~150% shut off, re-power on to recover
Over voltage protection ..... 110%~140% rated output voltage for CH1~CH3
Withstand voltage ..... I/P-O/P: 1.5kVAC, I/P-FG:2kVAC, 1minute
Working temperature ..... -10~+60°C (refer to output derating curve)
Safety standards ..... UL60950-1, TUV EN60950-1 approved
EMC standards ..... EN55022 class B, EN61000-3-2,-3, EN61000-4-2,3,4,5,6,8,11

Model No.	Output	Tol.	R&N	Effi.	Max.
IPC-250	3.3V, 0~20A	±5%	50mV	75%	250W
	5V, 1~25A	±5%	50mV		
	12V, 1~15A	±7%	120mV		
	-5V, 0~0.5A	±8%	100mV		
	-12V, 0.1~1.0A	±10%	120mV		
	5VSB, 0~2.0A	±5%	50mV		
IPC-300A	3.3V, 0~20A	±5%	50mV	75%	300W
	5V, 1~30A	±5%	50mV		
	12V, 1~18A	±7%	120mV		
	-5V, 0~0.5A	±8%	100mV		
	-12V, 0.1~1.0A	±10%	120mV		
	5VSB, 0~2.0A	±5%	50mV		
IPC-300B	24V, 0~3.0A	±5%	240mV	80%	300W
	5V, 1~30A	±5%	50mV		
	12V, 1~18A	±7%	120mV		
	-5V, 0~0.5A	±8%	100mV		
	-12V, 0.1~1.0A	±10%	120mV		
	5VSB, 0~2.0A	±5%	50mV		

Best products also need best service.
We have authorized distributors all over the world. They have sufficient stock for your prompt delivery. Also they can offer you technical support & RMA services. Please contact your local distributors for more product information. You can also contact us at info@meanwell.com for information of your local distributors.

We provide specification, drawing, test report and more information, please visit our website —
http://www.meanwell.com

48hrs delivery—
We keep enough stock for 95% of standard models at our 2400m² warehouse. We can arrange prompt delivery within 48hrs.

DC/DC Converter

0.5~1W Module Type

0.5W DC-DC Regulated Single Output

0.89"x 0.39"x 0.33"

- 1000VDC I/O isolation
- Internal SMD technology
- Built-in EMI filter
- Protection: Short circuit
- Cooling by free air convection
- Non-conductive plastic case
- Dual in line package
- 100% full load burn-in test
- Low cost, high reliability
- 2 years warranty

Mechanism

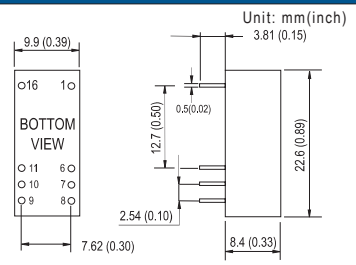

Pin Configuration

Pin No.	Output
1 & 16	+Vin
6 & 11	-Vout
7 & 10	+Vout
8 & 9	-Vin

Voltage set point accuracy.... ±2% (typical)
Line regulation ..... ±1% (max.)
Load regulation ..... ±1% (max.)@10~100% load
Input reflected ripple 120mVp-p
Efficiency ..... 60% (typical)
Short circuit protection .....Continuous, auto-recovery
Switching frequency ..... 50kHz (min.)
I/O isolation voltage ..... 1000VDC (min.)
I/O isolation resistance ..... 100MΩ (min.)@ 500VDC
Isolation capacitance ..... 80pF (max.)
Working temperature .....-25°C to +60°C (no derating), +71°C@80% load
Storage temperature ..... -25°C to +105°C
Temp. Coefficient ..... ±0.03% / °C (max.)
Case material .....non-conductive plastic
EMC .....Compliance to EN55022 class B,
EN61000-4-2,3,4,5,6,8, FCC part15 class B

Model No.	Input (VDC)	Output (VDC)	Current (mA)	R&N (mVp-p)
SRS-0505	5±10%	5	100	100
SRS-0509	5±10%	9	56	100
SRS-0512	5±10%	12	42	100
SRS-0515	5±10%	15	34	100
SRS-1205	12±10%	5	100	100
SRS-1209	12±10%	9	56	100
SRS-1212	12±10%	12	42	100
SRS-1215	12±10%	15	34	100
SRS-2405	24±10%	5	100	100
SRS-2409	24±10%	9	56	100
SRS-2412	24±10%	12	42	100
SRS-2415	24±10%	15	34	100
SRS-4805	48±10%	5	100	100
SRS-4809	48±10%	9	56	100
SRS-4812	48±10%	12	42	100
SRS-4815	48±10%	15	34	100

1W DC-DC Unregulated Single Output

0.89"x 0.39"x 0.33"

- 1000VDC I/O isolation
- Internal SMD technology
- Built-in EMI filter
- Protection: Short circuit
- Cooling by free air convection
- Non-conductive plastic case
- Dual in line package
- 100% full load burn-in test
- Low cost, high reliability
- 2 years warranty

Mechanism

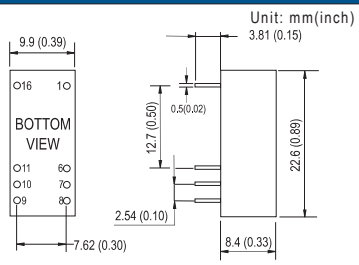

Pin Configuration

Pin No.	Output
1 & 16	+Vin
6 & 11	-Vout
7 & 10	+Vout
8 & 9	-Vin

Voltage set point accuracy ...±2% (max.)
Line regulation ..... ±1.2% (max.) for 1% input variation
Load regulation ..... ±8% (max.)@20~100% load
Input reflected ripple 120mVp-p
Efficiency ..... 83% (typical)
Short circuit protection ..... Momentary
Switching frequency ..... 50kHz (min.)
I/O isolation voltage ..... 1000VDC (min.)
I/O isolation resistance ..... 100MΩ (min.)@ 500VDC
Isolation capacitance ..... 80pF (max.)
Working temperature ..... -25°C to +60°C (no derating), +71°C@80% load
Storage temperature .....-25°C to +105°C
Temp. Coefficient ..... ±0.03% / °C (max.)
Case material ..... non-conductive plastic
EMC ..... Compliance to EN55022 class B,
EN61000-4-2,3,4,5,6,8, FCC part15 class B

Model No.	Input (VDC)	Output (VDC)	Current (mA)	R&N (mVp-p)
SUS01L-05	5±10%	5	200	100
SUS01L-09	5±10%	9	111	100
SUS01L-12	5±10%	12	84	100
SUS01L-15	5±10%	15	67	100
SUS01M-05	12±10%	5	200	100
SUS01M-09	12±10%	9	111	100
SUS01M-12	12±10%	12	84	100
SUS01M-15	12±10%	15	67	100
SUS01N-05	24±10%	5	200	100
SUS01N-09	24±10%	9	111	100
SUS01N-12	24±10%	12	84	100
SUS01N-15	24±10%	15	67	100
SUS01O-05	48±10%	5	200	100
SUS01O-09	48±10%	9	111	100
SUS01O-12	48±10%	12	84	100
SUS01O-15	48±10%	15	67	100

DC/DC Converter

1W Module Type

1W DC-DC Unregulated Single Output

0.50"x 0.30"x 0.24"

- 1000VDC I/O isolation
- Internal SMD technology
- Protection: Short circuit
- Cooling by free air convection
- Non-conductive plastic case
- SMD package style
- 100% full load burn-in test
- Low cost, high reliability
- 1 year warranty

Mechanism

Unit: mm(inch)

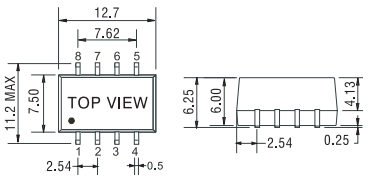

Pin Configuration

Pin No.	Output
1	-Vin
2	+Vin
3	NC
4	-Vout
5	+Vout
6	NC
7	NC
8	NC

Voltage set point accuracy ..... ±8% (max.)
Line regulation ..... ±1.2% (max.) for 1% input variation
Load regulation ..... ±8% (max.)@20~100% load
Input reflected ripple 100mVp-p
Efficiency ..... 75% (typical)
Short circuit protection .....Momentary
Switching frequency .....100kHz (typical)
I/O isolation voltage ..... 1000VDC (min.)
I/O isolation resistance ..... 100MΩ (min.)@ 500VDC
Working temperature ..... -40°C to +85°C
Storage temperature .....-40°C to +105°C
Temp. Coefficient ..... ±0.03% / °C (max.)
Case material ..... non-conductive plastic
Safety standards ..... UL60950-1 approved

Model No.	Input (VDC)	Output (VDC)	Current (mA)	R&N (mVp-p)
SBT01L-05	5±10%	5	200	100
SBT01L-09	5±10%	9	111	100
SBT01L-12	5±10%	12	84	100
SBT01L-15	5±10%	15	67	100
SBT01M-05	12±10%	5	200	100
SBT01M-09	12±10%	9	111	100
SBT01M-12	12±10%	12	84	100
SBT01M-15	12±10%	15	67	100

We provide specification, drawing, test report and more information, please visit our website —
http://www.meanwell.com

Best products also need best service.
We have authorized distributors all over the world. They have sufficient stock for your prompt delivery. Also they can offer you technical support & RMA services. Please contact your local distributors for more product information. You can also contact us at info@meanwell.com for information of your local distributors.

1W DC-DC Unregulated Single and Dual Output

0.60"x 0.295"x 0.255"

- 3000VDC I/O isolation
- Internal SMD technology
- Protection: Short circuit
- Cooling by free air convection
- Non-conductive plastic case
- SMD package style
- 100% full load burn-in test
- Low cost, high reliability
- 1 year warranty

Mechanism

Unit: mm(inch)

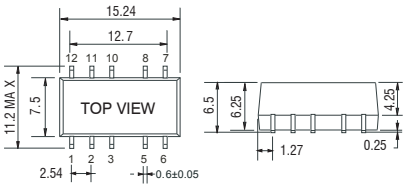

Pin Configuration

Pin No.	Output	
	Single	Dual
1	-Vin	-Vin
2	+Vin	+Vin
3	NC	NC
5	-Vout	COM
6	NC	-Vout
7	NC	NC
8	+Vout	+Vout
10	NC	NC
11	NC	NC
12	NC	NC

Voltage set point accuracy .....±8% (max.)
Line regulation ..... ±1.2% (max.) for 1% input variation
Load regulation ..... ±8% (max.)@20~100% load
Efficiency ..... 79% (typical)
Short circuit protection .....Momentary
Switching frequency ..... 100kHz (typical)
I/O isolation voltage ..... 3000VDC (min.)
I/O isolation resistance ..... 100MΩ (min.)@ 500VDC
Working temperature ..... -40°C to +85°C
Storage temperature .....-40°C to +105°C
Temp. Coefficient ..... ±0.03% / °C (max.)
Case material ..... non-conductive plastic
Safety standards ..... UL60950-1, CSA C22.2 approved

Model No.	Input (VDC)	Output (VDC)	Current (mA)	R&N (mVp-p)
SFT01L-05	5±10%	5	200	100
SFT01L-09	5±10%	9	111	100
SFT01L-12	5±10%	12	84	100
SFT01L-15	5±10%	15	67	100
SFT01M-05	12±10%	5	200	100
SFT01M-12	12±10%	12	84	100
SFT01M-15	12±10%	15	67	100

Model No.	Input (VDC)	Output (VDC)	Current (mA)	R&N (mVp-p)
DET01L-05	5±10%	±5	±100	100
DET01L-09	5±10%	±9	±56	100
DET01L-12	5±10%	±12	±42	100
DET01L-15	5±10%	±15	±33	100
DET01M-15	12±10%	±15	±33	100

Customer Satisfaction —
Today's effort, tomorrow's reward. Continuously improve CQTS to satisfy customer is our goal.

DC/DC Converter

1W Module Type

1W DC-DC Regulated Single Output

- 1000VDC I/O isolation
- Internal SMD technology
- Built-in EMI filter
- Protection: Short circuit / Overload
- Cooling by free air convection
- Non-conductive plastic case
- Single in line package
- 100% full load burn-in test
- Low cost, high reliability
- 2 years warranty

Mechanism

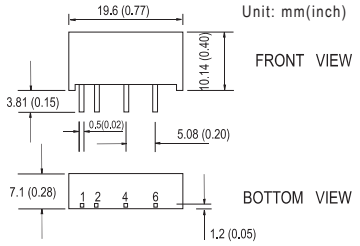

Pin Configuration

Pin No.	Output
1	+Vout
2	-Vin
4	-Vout
6	+Vout

Voltage set point accuracy ... ±2% (typical)
Line regulation ..... ±1% (max.)
Load regulation ..... ±1% (max.)@10~100% load
Efficiency ..... 65% (typical)
Overload protection ..... >110% hiccup mode, auto-recovery
Short circuit protection ..... Continuous, auto-recovery
Switching frequency ..... 50kHz (min.)
I/O isolation voltage ..... 1000VDC (min.)
I/O isolation resistance ..... 100MΩ (min.)
Isolation capacitance ..... 80pF (max.)
Working temperature ..... -25~+71°C (refer to output derating curve)
Storage temperature .....-25°C to +105°C
Temp. Coefficient ..... ±0.03% / °C (max.)
Case material ..... non-conductive plastic
EMC ..... Compliance to EN55022 class B,
EN61000-4-2,3,4,5,6,8, FCC part15 class B

Model No.	Input (VDC)	Output (VDC)	Current (mA)	R&N (mVp-p)
SPR01L-05	5±10%	5	200	100
SPR01L-09	5±10%	9	100	100
SPR01L-12	5±10%	12	84	100
SPR01L-15	5±10%	15	67	100
SPR01M-05	12±10%	5	200	100
SPR01M-09	12±10%	9	100	100
SPR01M-12	12±10%	12	84	100
SPR01M-15	12±10%	15	67	100
SPR01N-05	24±10%	5	200	100
SPR01N-09	24±10%	9	100	100
SPR01N-12	24±10%	12	84	100
SPR01N-15	24±10%	15	67	100
SPR01O-05	48±10%	5	200	100
SPR01O-09	48±10%	9	100	100
SPR01O-12	48±10%	12	84	100
SPR01O-15	48±10%	15	67	100

1W DC-DC Unregulated Single Output

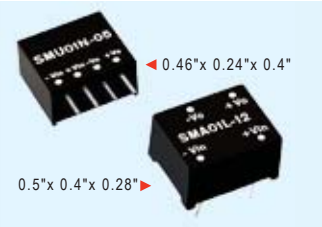

- 1500VDC I/O isolation
- Operating temperature range -40~85°C without derating
- Internal SMD technology
- Built-in EMI filter
- Protection: Short circuit
- Cooling by free air convection
- Non-conductive plastic case
- Dual in line package for SMA01
- 100% full load burn-in test
- Industry standard pinout
- 2 years warranty

Mechanism

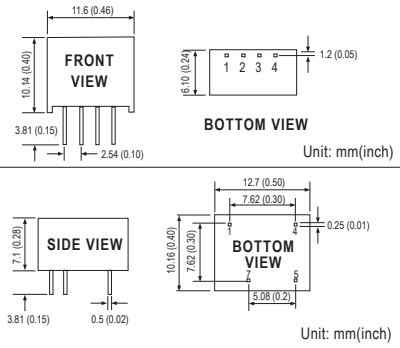

Pin Configuration

SMU01

Pin No.	Output
1	-Vin
2	+Vin
3	-Vout
4	+Vout

SMA01

Pin No.	Output
1	-Vin
4	+Vin
5	+Vout
7	-Vout

Voltage set point accuracy ..... ±2% (max.)
Line regulation .....±1.2% (max.) for 1% input variation
Load regulation .....±8% (max.)@20~100% load
Input reflected ripple 100mVp-p
Efficiency .....80% (typical)
Short circuit protection .....Momentary
Switching frequency .....100kHz (min.)
I/O isolation voltage ..... 1500VDC (min.)
I/O isolation resistance .....100MΩ (min.)@ 500VDC
Isolation capacitance .....80pF (max.)
Working temperature ..... -40~+85°C (no derating)
Storage temperature ..... -55°C to +125°C
EMC ..... Compliance to EN55022 class B,
EN61000-4-2,3,4,5,6,8, FCC part15 class B

Model No.	Input (VDC)	Output (VDC)	Current (mA)	R&N (mVp-p)
SMU01L-05	5±10%	5	200	100
SMU01L-09	5±10%	9	110	100
SMU01L-12	5±10%	12	84	100
SMU01L-15	5±10%	15	67	100
SMU01M-05	12±10%	5	200	100
SMU01M-09	12±10%	9	110	100
SMU01M-12	12±10%	12	84	100
SMU01M-15	12±10%	15	67	100
SMU01N-05	24±10%	5	200	100
SMU01N-09	24±10%	9	110	100
SMU01N-12	24±10%	12	84	100
SMU01N-15	24±10%	15	67	100

Model No.	Input (VDC)	Output (VDC)	Current (mA)	R&N (mVp-p)
SMA01L-05	5±10%	5	200	100
SMA01L-09	5±10%	9	110	100
SMA01L-12	5±10%	12	84	100
SMA01L-15	5±10%	15	67	100
SMA01M-05	12±10%	5	200	100
SMA01M-09	12±10%	9	110	100
SMA01M-12	12±10%	12	84	100
SMA01M-15	12±10%	15	67	100
SMA01N-05	24±10%	5	200	100
SMA01N-09	24±10%	9	110	100
SMA01N-12	24±10%	12	84	100
SMA01N-15	24±10%	15	67	100

DC/DC Converter

2~5W Module Type

2~3W DC-DC Unregulated Single Output

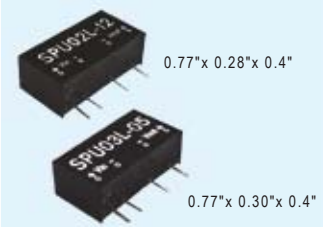

- 3000VDC I/O isolation
- Internal SMD technology
- Built-in EMI filter
- Protection: Short circuit
- Cooling by free air convection
- Non-conductive plastic case
- Single in line package
- 100% full load burn-in test
- Low cost, high reliability
- 2 years warranty

Mechanism

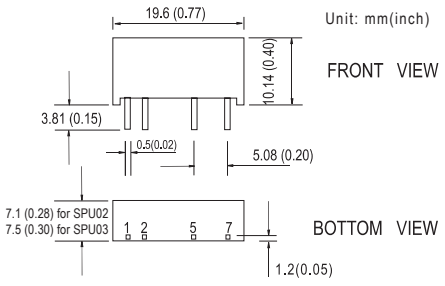

Pin Configuration

Pin No.	Output
1	+Vin
2	-Vin
5	-Vout
7	+Vout

Voltage set point accuracy ... ±2% (max.)
Line regulation .....±1.2% (max.) for 1% input variation
Load regulation .....±8% (max.)@20~100% load
Efficiency ..... 83% (typical) for SPU02; 88% (typical) for SPU03
Short circuit protection ..... Momentary
Switching frequency ..... 100kHz (min.) for SPU02; 60kHz (min.) for SPU03
I/O isolation voltage ..... 3000VDC (min.)
I/O isolation resistance .....100MΩ (min.)
Isolation capacitance .....80pF (max.)
Working temperature ..... -40~+71°C (refer to output derating curve) for SPU02
-40~+90°C (refer to output derating curve) for SPU03
Storage temperature ..... -40°C to +105°C
Temp. Coefficient ..... ±0.03% / °C (max.)
Case material ..... non-conductive plastic
EMC ..... Compliance to EN55022 class B,
EN61000-4-2,3,4,5,6,8, FCC part15 class B

Model No.	Input (VDC)	Output (VDC)	Current (mA)	R&N (mVp-p)
SPU02L-05	5±10%	5	400	100
SPU02L-12	5±10%	12	167	100
SPU02L-15	5±10%	15	133	100
SPU02M-05	12±10%	5	400	100
SPU02M-12	12±10%	12	167	100
SPU02M-15	12±10%	15	133	100
SPU02N-05	24±10%	5	400	100
SPU02N-12	24±10%	12	167	100
SPU02N-15	24±10%	15	133	100

Model No.	Input (VDC)	Output (VDC)	Current (mA)	R&N (mVp-p)
SPU03L-05	5±10%	5	600	50
SPU03L-12	5±10%	12	250	50
SPU03L-15	5±10%	15	200	50
SPU03M-05	12±10%	5	600	50
SPU03M-12	12±10%	12	250	50
SPU03M-15	12±10%	15	200	50
SPU03N-05	24±10%	5	600	50
SPU03N-12	24±10%	12	250	50
SPU03N-15	24±10%	15	200	50

2~5W DC-DC Regulated Single Output

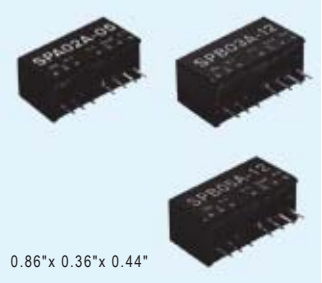

- 2:1 wide input range
- 4:1 wide input range (option)for 2W
- 1000VDC I/O isolation for 2W/3W
  1500VDC I/O isolation for 5W
- Built-in remote ON/OFF control
- Built-in EMI filter
- Protection: Short circuit / Overload
- Cooling by free air convection
- Non-conductive plastic case
- Single in line package
- 100% full load burn-in test
- Modified models available:
  output 3.3V / 9V (except for 5W)
- 2 years warranty

Mechanism

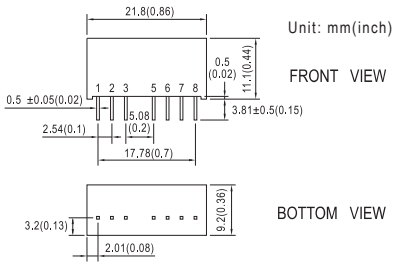

Pin Configuration

Pin No.	Output
1	-Vin
2	+Vin
3	R.C.
5	N.C.
6	+Vout
7	-Vout
8	N.C.

Voltage set point accuracy .... ±2% (max.)
Line regulation ..... ±0.5% (max.)
Load regulation ..... ±0.5% (max.)@10~100% load
Efficiency .....85% (typical)
Short circuit protection .....Continuous, auto-recovery
Overload protection ..... 150%~250%, auto-recovery
I/O isolation voltage .....1000VDC (min.) for 2W/3W, 1500VDC (min.) for 5W
I/O isolation resistance ..... 100MΩ (min.)
Working temperature .....-40~+85°C (refer to output derating curve)
Case material .....non-conductive plastic
EMC .....Compliance to EN55022 class B,
EN61000-4-2,3,4,5,6,8, FCC part15 class B

Model No.	Input (VDC)	Output (VDC)	Current (mA)	R&N (mVp-p)
SPA02E-05	4.5~9	5	400	60
SPA02E-12	4.5~9	12	150	60
SPA02E-15	4.5~9	15	120	60
SPA02A-05	9~18	5	400	60
SPA02A-12	9~18	12	167	60
SPA02A-15	9~18	15	133	60
SPA02B-05	18~36	5	400	60
SPA02B-12	18~36	12	167	60
SPA02B-15	18~36	15	133	60
SPA02C-05	36~72	5	400	60
SPA02C-12	36~72	12	167	60
SPA02C-15	36~72	15	133	60

Model No.	Input (VDC)	Output (VDC)	Current (mA)	R&N (mVp-p)
SPB03E-05	4.5~9	5	600	50
SPB03E-12	4.5~9	12	250	60
SPB03E-15	4.5~9	15	200	60
SPB03A-05	9~18	5	600	50
SPB03A-12	9~18	12	250	60
SPB03A-15	9~18	15	200	60
SPB03B-05	18~36	5	600	50
SPB03B-12	18~36	12	250	60
SPB03B-15	18~36	15	200	60
SPB03C-05	36~72	5	600	50
SPB03C-12	36~72	12	250	60
SPB03C-15	36~72	15	200	60

Model No.	Input (VDC)	Output (VDC)	Current (mA)	R&N (mVp-p)
SPB05A-05	9~18	5	1000	80
SPB05A-12	9~18	12	417	90
SPB05A-15	9~18	15	333	90
SPB05B-05	18~36	5	1000	80
SPB05B-12	18~36	12	417	90
SPB05B-15	18~36	15	333	90
SPB05C-05	36~72	5	1000	80
SPB05C-12	36~72	12	417	90
SPB05C-15	36~72	15	333	90

DC/DC Converter

3~6W Module Type

3W DC-DC Regulated Single and Dual Output

1.25"x 0.8"x 0.48"

- 2:1 wide input range
- 4:1 wide input range (option)
- 1000VDC I/O isolation
- 3000VDC I/O isolation (option)
- Built-in EMI filter
- Protection: Short circuit / Overload
- Cooling by free air convection
- Five-sided shield metal case
- 100% full load burn-in test
- Low cost, high reliability
- 2 years warranty

Mechanism

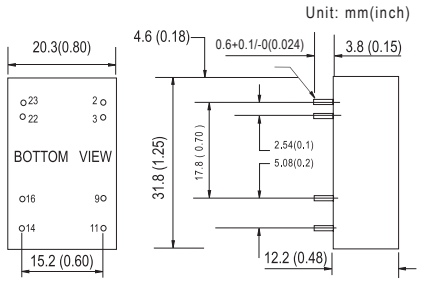

Pin Configuration

Pin No.	Output	
	Single	Dual
2&3	-Vin	-Vin
9	NC	COM
11	NC	-Vout
14	+Vout	+Vout
16	-Vout	COM
22&23	+Vin	+Vin

Voltage set point accuracy .... ±2% (max.)
Line regulation .....±0.5% (max.)
Load regulation .....±0.5% (max.)@10~100% load
Efficiency ..... 82% (typical)
Short circuit protection ..... Continuous, auto-recovery
Overload protection ..... 160%~250%, auto-recovery
I/O isolation voltage ..... 1000VDC (min.)
I/O isolation resistance ..... 100MΩ (min.)@ 500VDC
Isolation capacitance .....80pF (max.)
Working temperature .....-40~+71°C (refer to output derating curve)
Storage temperature .....-40°C to +105°C
Temp. Coefficient .....±0.03% / °C (max.)
Case material ..... Five-sided shield metal case
EMC ..... Compliance to EN55022 class B, EN61000-4-2,3,4,5,6,8, FCC part15 class B

❖ Single Output

Model No.	Input (VDC)	Output (VDC)	Current (mA)	R&N (mVp-p)
SCW03A-05	9~18	5	600	50
SCW03A-12	9~18	12	250	60
SCW03A-15	9~18	15	200	60
SCW03B-05	18~36	5	600	50
SCW03B-12	18~36	12	250	60
SCW03B-15	18~36	15	200	60
SCW03C-05	36~72	5	600	50
SCW03C-12	36~72	12	250	60
SCW03C-15	36~72	15	200	60

❖ Dual Output

Model No.	Input (VDC)	Output (VDC)	Current (mA)	R&N (mVp-p)
DCW03A-05	9~18	±5	±300	50
DCW03A-12	9~18	±12	±125	60
DCW03A-15	9~18	±15	±100	60
DCW03B-05	18~36	±5	±300	50
DCW03B-12	18~36	±12	±125	60
DCW03B-15	18~36	±15	±100	60
DCW03C-05	36~72	±5	±300	50
DCW03C-12	36~72	±12	±125	60
DCW03C-15	36~72	±15	±100	60

5~6W DC-DC Regulated Single and Dual Output

1.25"x 0.8"x 0.48"

- 2:1 wide input range
- 4:1 wide input range(option)
- 1000VDC I/O isolation
- 3000VDC I/O isolation(option)
- Built-in EMI filter
- Protection: Short circuit / Overload
- Cooling by free air convection
- Five-sided shield metal case
- 100% full load burn-in test
- Low cost, high reliability
- 2 years warranty

Mechanism

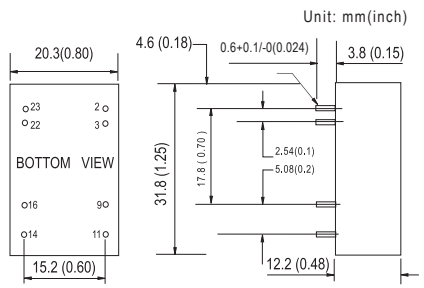

Pin Configuration

Pin No.	Output	
	Single	Dual
2&3	-Vin	-Vin
9	NC	COM
11	NC	-Vout
14	+Vout	+Vout
16	-Vout	COM
22&23	+Vin	+Vin

Voltage set point accuracy ..... ±2% (max.)
Line regulation .....±0.5% (max.)
Load regulation .....±0.5% (max.)@20~100% load
Efficiency .....85% (typical)
Short circuit protection .....Continuous, auto-recovery
Overload protection .....150%~250%, auto-recovery
I/O isolation voltage ..... 1000VDC (min.)
I/O isolation resistance .....100MΩ (min.)@ 500VDC
Isolation capacitance .....80pF (max.)
Working temperature .....-40~+71°C (refer to output derating curve)
Storage temperature .....-40°C to +105°C
Temp. Coefficient .....±0.03% / °C (max.)
Case material ..... Five-sided shield metal case
EMC ..... Compliance to EN55022 class B, EN61000-4-2,3,4,5,6,8, FCC part15 class B

❖ Single Output

Model No.	Input (VDC)	Output (VDC)	Current (mA)	R&N (mVp-p)
SCW05A-05	9~18	5	1000	50
SCW05A-09	9~18	9	556	60
SCW05A-12	9~18	12	470	60
SCW05A-15	9~18	15	400	60
SCW05B-05	18~36	5	1000	50
SCW05B-09	18~36	9	556	60
SCW05B-12	18~36	12	470	60
SCW05B-15	18~36	15	400	60
SCW05C-05	36~72	5	1000	50
SCW05C-09	36~72	9	556	60
SCW05C-12	36~72	12	470	60
SCW05C-15	36~72	15	400	60

❖ Dual Output

Model No.	Input (VDC)	Output (VDC)	Current (mA)	R&N (mVp-p)
DCW05A-05	9~18	±5	±500	50
DCW05A-12	9~18	±12	±230	60
DCW05A-15	9~18	±15	±190	60
DCW05B-05	18~36	±5	±500	50
DCW05B-12	18~36	±12	±230	60
DCW05B-15	18~36	±15	±190	60
DCW05C-05	36~72	±5	±500	50
DCW05C-12	36~72	±12	±230	60
DCW05C-15	36~72	±15	±190	60

DC/DC Converter

5~8W Module Type

5W DC-DC Regulated Single and Dual Output

2"x 1"x 0.44"

- 2:1 wide input range
- 4:1 wide input range(option)
- 1000VDC I/O isolation
- 3000VDC I/O isolation(option)
- Built-in EMI filter
- Protection: Short circuit / Overload
- Cooling by free air convection
- Six-sided shield metal case
- 100% full load burn-in test
- Low cost, high reliability
- 2 years warranty

Mechanism

Unit: mm(inch)

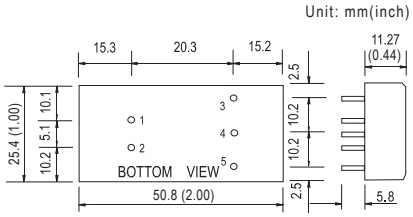

Pin Configuration

Pin No.	Output	
	Single	Dual
1	+Vin	+Vin
2	-Vin	-Vin
3	+Vout	+Vout
4	No Pin	COM
5	-Vout	-Vout

Voltage set point accuracy ...±2% (max.)
Line regulation .....±0.2% (max.)
Load regulation .....±0.5% (max.)@10~100% load
Efficiency ..... 85% (typical)
Short circuit protection ..... Continuous, auto-recovery
Overload protection ..... 160%~250%, auto-recovery
I/O isolation voltage ..... 1000VDC (min.)
I/O isolation resistance ..... 100MΩ (min.)@ 500VDC
Working temperature ..... -25~+71°C (refer to output derating curve)
Storage temperature .....-25°C to +105°C
Temp. Coefficient ..... ±0.03% / °C (max.)
Case material ..... Six-sided shield metal case
EMC ..... Compliance to EN55022 class B,
EN61000-4-2,3,4,5,6,8, FCC part15 class B

❖ Single Output

Model No.	Input (VDC)	Output (VDC)	Current (mA)	R&N (mVp-p)
SLW05A-05	9~18	5	1000	50
SLW05A-09	9~18	9	556	60
SLW05A-12	9~18	12	417	60
SLW05A-15	9~18	15	333	60
SLW05B-05	18~36	5	1000	50
SLW05B-09	18~36	9	556	60
SLW05B-12	18~36	12	417	60
SLW05B-15	18~36	15	333	60
SLW05C-05	36~72	5	1000	50
SLW05C-09	36~72	9	556	60
SLW05C-12	36~72	12	417	60
SLW05C-15	36~72	15	333	60

❖ Dual Output

Model No.	Input (VDC)	Output (VDC)	Current (mA)	R&N (mVp-p)
DLW05A-05	9~18	±5	±500	50
DLW05A-12	9~18	±12	±208	60
DLW05A-15	9~18	±15	±167	60
DLW05B-05	18~36	±5	±500	50
DLW05B-12	18~36	±12	±208	60
DLW05B-15	18~36	±15	±167	60
DLW05C-05	36~72	±5	±500	50
DLW05C-12	36~72	±12	±208	60
DLW05C-15	36~72	±15	±167	60

8W DC-DC Regulated Single and Dual Output

1.25"x 0.8"x 0.48"

- 2:1 wide input range
- 1000VDC I/O isolation
- Built-in EMI filter
- Protection: Short circuit / Overload
- Cooling by free air convection
- Five-sided shield metal case
- 100% full load burn-in test
- Low cost, high reliability
- 2 years warranty

Mechanism

Unit: mm(inch)

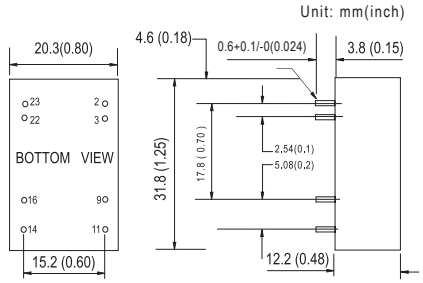

Pin Configuration

Pin No.	Output	
	Single	Dual
2&3	-Vin	-Vin
9	NC	COM
11	NC	-Vout
14	+Vout	+Vout
16	-Vout	COM
22&23	+Vin	+Vin

Voltage set point accuracy .... ±2% (max.)
Line regulation .....±0.5% (max.)
Load regulation .....±0.5% (max.)@20~100% load
Efficiency ..... 82% (typical)
Short circuit protection ..... Continuous, auto-recovery
Overload protection ..... 110%~250%, auto-recovery
I/O isolation voltage ..... 1000VDC (min.)
I/O isolation resistance .....100MΩ (min.)@ 500VDC
Isolation capacitance ..... 250pF (max.)
Working temperature ..... -40~+71°C (refer to output derating curve)
Storage temperature ..... -40°C to +105°C
Temp. Coefficient ..... ±0.03% / °C (max.)
Case material ..... Five-sided shield metal case
EMC ..... Compliance to EN55022 class B,
EN61000-4-2,3,4,5,6,8, FCC part15 class B

❖ Single Output

Model No.	Input (VDC)	Output (VDC)	Current (mA)	R&N (mVp-p)
SCW08A-05	9~18	5	1600	50
SCW08A-12	9~18	12	670	60
SCW08A-15	9~18	15	533	60
SCW08B-05	18~36	5	1600	50
SCW08B-12	18~36	12	670	60
SCW08B-15	18~36	15	533	60
SCW08C-05	36~72	5	1600	50
SCW08C-12	36~72	12	670	60
SCW08C-15	36~72	15	533	60

❖ Dual Output

Model No.	Input (VDC)	Output (VDC)	Current (mA)	R&N (mVp-p)
DCW08A-05	9~18	±5	±800	50
DCW08A-12	9~18	±12	±335	60
DCW08A-15	9~18	±15	±267	60
DCW08B-05	18~36	±5	±800	50
DCW08B-12	18~36	±12	±335	60
DCW08B-15	18~36	±15	±267	60
DCW08C-05	36~72	±5	±800	50
DCW08C-12	36~72	±12	±335	60
DCW08C-15	36~72	±15	±267	60

DC/DC Converter

10~12W Module Type

10W DC-DC Regulated Single and Dual Output

2"x 1"x 0.44"

- 2:1 wide input range
- 4:1 wide input range(option)
- 1000VDC I/O isolation
- 3000VDC I/O isolation (option)
- Built-in EMI filter
- Protection: Short circuit / Overload
- Cooling by free air convection
- Six-sided shield metal case
- 100% full load burn-in test
- Low cost, high reliability
- 2 years warranty

Mechanism

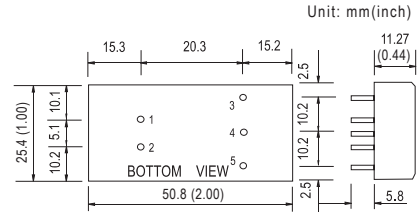

Pin Configuration

Pin No.	Output	
	Single	Dual
1	+Vin	+Vin
2	-Vin	-Vin
3	+Vout	+Vout
4	No Pin	COM
5	-Vout	-Vout

Voltage set point accuracy ...±2% (max.)
Line regulation ..... ±0.3% (max.)
Load regulation ..... ±0.5% (max.)@10~100% load
Efficiency .....85% (typical)
Short circuit protection .....Continuous, auto-recovery
Overload protection ..... 160%~250%, auto-recovery
I/O isolation voltage .....1000VDC (min.)
I/O isolation resistance .....100MΩ (min.)@ 500VDC
Working temperature .....-25~+71°C (refer to output derating curve)
Storage temperature ..... -25°C to +105°C
Temp. Coefficient .....±0.03% / °C (max.)
Case material .....Six-sided shield metal case
EMC .....Compliance to EN55022 class B,
EN61000-4-2,3,4,5,6,8, FCC part15 class B

❖ Single Output

Model No.	Input (VDC)	Output (VDC)	Current (mA)	R&N (mVp-p)
SKE10A-05	9~18	5	2000	50
SKE10A-12	9~18	12	840	60
SKE10A-15	9~18	15	666	60
SKE10A-24	9~18	24	420	80
SKE10B-05	18~36	5	2000	50
SKE10B-12	18~36	12	840	60
SKE10B-15	18~36	15	666	60
SKE10B-24	18~36	24	420	80
SKE10C-05	36~72	5	2000	50
SKE10C-12	36~72	12	840	60
SKE10C-15	36~72	15	666	60
SKE10C-24	36~72	24	420	80

❖ Dual Output

Model No.	Input (VDC)	Output (VDC)	Current (mA)	R&N (mVp-p)
DKE10A-05	9~18	±5	±1000	50
DKE10A-12	9~18	±12	±420	60
DKE10A-15	9~18	±15	±333	60
DKE10A-24	9~18	±24	±210	80
DKE10B-05	18~36	±5	±1000	50
DKE10B-12	18~36	±12	±420	60
DKE10B-15	18~36	±15	±333	60
DKE10B-24	18~36	±24	±210	80
DKE10C-05	36~72	±5	±1000	50
DKE10C-12	36~72	±12	±420	60
DKE10C-15	36~72	±15	±333	60
DKE10C-24	36~72	±24	±210	80

12W DC-DC Regulated Single and Dual Output

1.25"x 0.8"x 0.48"

- 2:1 wide input range
- 1500VDC I/O isolation
- Built-in remote ON/OFF control
- Built-in EMI filter
- Protection: Short circuit / Overload
- Cooling by free air convection
- Five-sided shield metal case
- 100% full load burn-in test
- Low cost, high reliability
- Modified models available: output 2.5V / 3.3V
- 2 years warranty

Mechanism

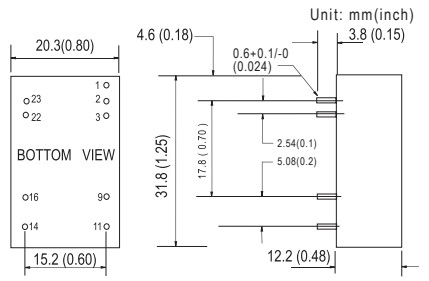

Pin Configuration

Pin No.	Output	
	Single	Dual
1	R.C	R.C
2&3	-Vin	-Vin
9	NC	COM
11	NC	-Vout
14	+Vout	+Vout
16	-Vout	COM
22&23	+Vin	+Vin

Voltage set point accuracy ...±2% (max.)
Line regulation ..... ±0.5% (max.)
Load regulation ..... ±0.5% (max.)@20~100% load
Efficiency .....85% (typical)
Short circuit protection .....Continuous, auto-recovery
Overload protection ..... 110%~180%, auto-recovery
I/O isolation voltage .....1500VDC (min.)
I/O isolation resistance .....100MΩ (min.)@ 500VDC
Working temperature .....-40~+71°C (refer to output derating curve)
Storage temperature ..... -40°C to +105°C
Temp. Coefficient .....±0.03% / °C (max.)
Case material .....Five-sided shield metal case
EMC .....Compliance to EN55022 class A,
EN61000-4-2,3,4,5,6,8, FCC part15 class A

❖ Single Output

Model No.	Input (VDC)	Output (VDC)	Current (mA)	R&N (mVp-p)
SCW12A-05	9~18	5	2400	50
SCW12A-12	9~18	12	1000	60
SCW12A-15	9~18	15	800	60
SCW12B-05	18~36	5	2400	50
SCW12B-12	18~36	12	1000	60
SCW12B-15	18~36	15	800	60
SCW12C-05	36~72	5	2400	50
SCW12C-12	36~72	12	1000	60
SCW12C-15	36~72	15	800	60

❖ Dual Output

Model No.	Input (VDC)	Output (VDC)	Current (mA)	R&N (mVp-p)
DCW12A-05	9~18	±5	±1200	50
DCW12A-12	9~18	±12	±500	60
DCW12A-15	9~18	±15	±400	60
DCW12B-05	18~36	±5	±1200	50
DCW12B-12	18~36	±12	±500	60
DCW12B-15	18~36	±15	±400	60
DCW12C-05	36~72	±5	±1200	50
DCW12C-12	36~72	±12	±500	60
DCW12C-15	36~72	±15	±400	60

DC/DC Converter

15W Module Type

15W DC-DC Regulated Single Output

1"x 1"x 0.39"

- 1"x1" compact size
- 2:1 wide input range
- 1500VDC I/O isolation
- High efficiency up to 88%
- Built-in remote ON/OFF control
- Built-in EMI filter
- Trimming output (±10%)
- Protections: Short circuit / Overload / Over voltage
- Cooling by free air convection
- 100% full load burn-in test
- Low cost, high reliability
- 2 years warranty

Mechanism

Unit: mm

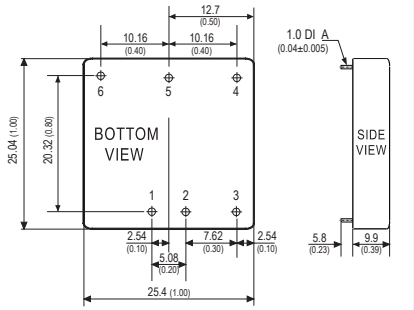

Pin Configuration

Pin No.	Output
1	+Vin
2	-Vin
3	R.C
4	-Vout
5	Trim
6	+Vout

Voltage set point accuracy ...±2% (max.)
Line regulation ..... ±0.5% (max.)
Load regulation ..... ±0.5% (max.) @10%~100% load
Overload protection ..... 110%~180%, auto-recovery
Over voltage protection ..... Clamp by TVS diode
Efficiency ..... 88% (typical)
I/O isolation voltage .....1500VDC(min.)
I/O isolation resistance ..... 100MΩ(min.) @500VDC
Working temperature ..... -40~+80°C(refer to output derating curve)
Storage temperature ..... -55°C to 100°C
Case Material ..... Six-sided shield metal case
EMC .....Compliance to EN55022 class A,
EN61000-4-2,3,4,5,6,8, FCC part15 classA

Model No.	Input (VDC)	Output (VDC)	Current (A)	R&N (mVp-p)
SKM15A-05	9~18	5	3.00	50
SKM15A-12	9~18	12	1.25	60
SKM15A-15	9~18	15	1.00	60
SKM15B-05	18~36	5	3.00	50
SKM15B-12	18~36	12	1.25	60
SKM15B-15	18~36	15	1.00	60
SKM15C-05	36~75	5	3.00	50
SKM15C-12	36~75	12	1.25	60
SKM15C-15	36~75	15	1.00	60

To Satisfy our customers is our goal —
- High Quality
- Low Cost
- Prompt Delivery
- Best Service

15W DC-DC Regulated Single and Dual Output

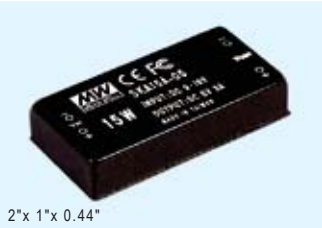

2"x 1"x 0.44"

- 2:1 wide input range
- 4:1 wide input range(option)
- 1000VDC I/O isolation
- 3000VDC I/O isolation (option)
- Built-in EMI filter
- Protection: Short circuit / Overload
- Cooling by free air convection
- Six-sided shield metal case
- 100% full load burn-in test
- Low cost, high reliability
- 2 years warranty

Mechanism

Unit: mm(inch)

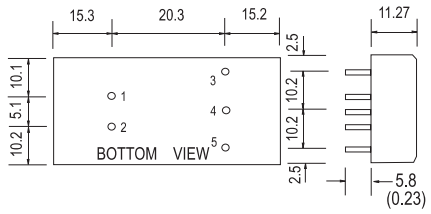

Pin Configuration

Pin No.	Output	
	Single	Dual
1	+Vin	+Vin
2	-Vin	-Vin
3	+Vout	+Vout
4	No Pin	COM
5	-Vout	-Vout

Voltage set point accuracy ... ±2% (max.)
Line regulation ..... ±0.2% (max.)
Load regulation ..... ±0.5% (max.)@10~100% load
Efficiency ..... 82% (typical)
Short circuit protection .....Continuous, auto-recovery
Overload protection ..... 110%~250%, auto-recovery
I/O isolation voltage .....1000VDC (min.)
I/O isolation resistance ..... 100MΩ (min.)@ 500VDC
Working temperature .....-40~+71°C (refer to output derating curve)
Storage temperature ..... -40°C to +105°C
Temp. Coefficient ..... ±0.03% / °C (max.)
Case material ..... Six-sided shield metal case
EMC .....Compliance to EN55022 class B,
EN61000-4-2,3,4,5,6,8, FCC part15 class B

❖ Single Output

Model No.	Input (VDC)	Output (VDC)	Current (mA)	R&N (mVp-p)
SKA15A-033	9~18	3.3	3000	50
SKA15A-05	9~18	5	3000	50
SKA15A-12	9~18	12	1250	60
SKA15A-15	9~18	15	1000	60
SKA15B-033	18~36	3.3	3000	50
SKA15B-05	18~36	5	3000	50
SKA15B-12	18~36	12	1250	60
SKA15B-15	18~36	15	1000	60
SKA15C-033	36~72	3.3	3000	50
SKA15C-05	36~72	5	3000	50
SKA15C-12	36~72	12	1250	60
SKA15C-15	36~72	15	1000	60

❖ Dual Output

Model No.	Input (VDC)	Output (VDC)	Current (mA)	R&N (mVp-p)
DKA15A-05	9~18	±5	±1500	50
DKA15A-12	9~18	±12	±625	60
DKA15A-15	9~18	±15	±500	60
DKA15B-05	18~36	±5	±1500	50
DKA15B-12	18~36	±12	±625	60
DKA15B-15	18~36	±15	±500	60
DKA15C-05	36~72	±5	±1500	50
DKA15C-12	36~72	±12	±625	60
DKA15C-15	36~72	±15	±500	60

DC/DC Converter

15~30W Module Type

15W DC-DC Regulated Single and Dual Output

- 2:1 wide input range
- 4:1 wide input range(option)
- 1000VDC I/O isolation
- 3000VDC I/O isolation(option)
- Built-in EMI filter
- Protections: Short circuit / Overload
- Cooling by free air convection
- Six-sided shield metal case
- 100% full load burn-in test
- Low cost, high reliability
- 2 years warranty

Mechanism

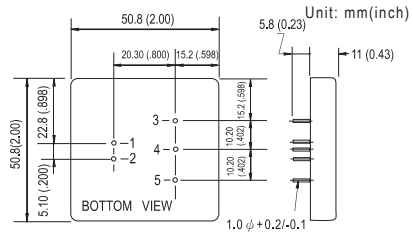

Pin Configuration

Pin No.	Output	
	Single	Dual
1	+Vin	+Vin
2	-Vin	-Vin
3	+Vout	+Vout
4	No Pin	COM
5	-Vout	-Vout

Voltage set point accuracy ... ±2% (max.)
Line regulation ..... ±0.3% (max.)
Load regulation ..... ±0.5% (max.)@10~100% load
Efficiency ..... 85% (typical)
Short circuit protection ..... Continuous, auto-recovery
Overload protection .....160%~250%, auto-recovery
I/O isolation voltage ..... 1000VDC (min.)
I/O isolation resistance ..... 100MΩ (min.)@ 500VDC
Working temperature ..... -25~+71°C (refer to output derating curve)
Storage temperature ..... -25°C to +105°C
Temp. Coefficient ..... ±0.03% / °C (max.)
Case material ..... Six-sided shield metal case
EMC .....Compliance to EN55022 class B,
EN61000-4-2,3,4,5,6,8, FCC part15 class B

❖ Single Output

Model No.	Input (VDC)	Output (VDC)	Current (mA)	R&N (mVp-p)
SKE15A-05	9~18	5	3000	50
SKE15A-12	9~18	12	1250	60
SKE15A-15	9~18	15	1000	60
SKE15A-24	9~18	24	625	80
SKE15B-05	18~36	5	3000	50
SKE15B-12	18~36	12	1250	60
SKE15B-15	18~36	15	1000	60
SKE15B-24	18~36	24	625	80
SKE15C-05	36~72	5	3000	50
SKE15C-12	36~72	12	1250	60
SKE15C-15	36~72	15	1000	60
SKE15C-24	36~72	24	625	80

❖ Dual Output

Model No.	Input (VDC)	Output (VDC)	Current (mA)	R&N (mVp-p)
DKE15A-05	9~18	±5	±1500	50
DKE15A-12	9~18	±12	±625	60
DKE15A-15	9~18	±15	±500	60
DKE15A-24	9~18	±24	±313	80
DKE15B-05	18~36	±5	±1500	50
DKE15B-12	18~36	±12	±625	60
DKE15B-15	18~36	±15	±500	60
DKE15B-24	18~36	±24	±313	80
DKE15C-05	36~72	±5	±1500	50
DKE15C-12	36~72	±12	±625	60
DKE15C-15	36~72	±15	±500	60
DKE15C-24	36~72	±24	±313	80

20~30W DC-DC Regulated Single Output

- 2"x 1" compact size
- 2:1 wide input range
- 1500VDC I/O isolation
- Built-in remote ON/OFF control
- Built-in EMI filter
- Trimming output (±10%)
- Protections:
  Short circuit / Overload /
  Input and output over voltage
- Cooling by free air convection
- Six-sided shield metal case
- 100% full load burn-in test
- Low cost, high reliability
- 2 years warranty

Mechanism

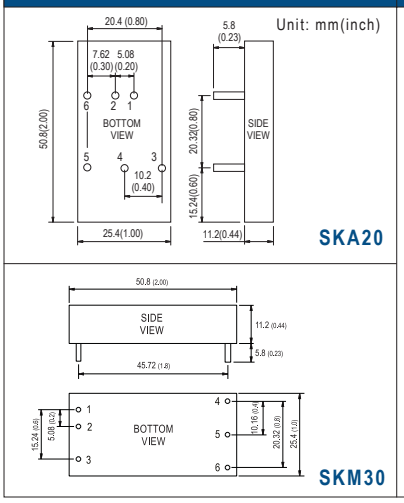

Pin Configuration

Pin No.	Output	
	SKA20	SKM30
1	+Vin	+Vin
2	-Vin	-Vin
3	+Vout	R.C.
4	Trim	+Vout
5	-Vout	-Vout
6	R.C.	Trim

Voltage set point accuracy .... ±2% (max.)
Line regulation ..... ±0.2% (max.)
Load regulation ..... ±0.5% (max.)@10~100% load
Efficiency ..... 89.5% (typical) for SKA20
90% (typical) for SKM30
Short circuit protection ..... Continuous, auto-recovery
Overload protection .....110%~180%, auto-recovery
I/O isolation voltage ..... 1500VDC (min.)
I/O isolation resistance .....100MΩ (min.)@ 500VDC
Working temperature ..... -40~+85°C (refer to output derating curve) for SKA20
-40~+75°C (refer to output derating curve) for SKM30
EMC .....Compliance to EN55022 class A,
EN61000-4-2,3,4,5,6,8, FCC part15 class A

❖ SKA20 Series

Model No.	Input (VDC)	Output (VDC)	Current (mA)	R&N (mVp-p)
SKA20A-05	9~18	5	4000	50
SKA20A-12	9~18	12	1666	60
SKA20A-15	9~18	15	1333	60
SKA20B-05	18~36	5	4000	50
SKA20B-12	18~36	12	1666	60
SKA20B-15	18~36	15	1333	60
SKA20C-05	36~75	5	4000	50
SKA20C-12	36~75	12	1666	60
SKA20C-15	36~75	15	1333	60

❖ SKM30 Series

Model No.	Input (VDC)	Output (VDC)	Current (A)	R&N (mVp-p)
SKM30A-05	9~18	5	6	90
SKM30A-12	9~18	12	2.5	120
SKM30A-15	9~18	15	2	120
SKM30B-05	18~36	5	6	90
SKM30B-12	18~36	12	2.5	120
SKM30B-15	18~36	15	2	120
SKM30C-05	36~75	5	6	90
SKM30C-12	36~75	12	2.5	120
SKM30C-15	36~75	15	2	120

DC/DC Converter

25~30W Module Type

30W DC-DC Regulated Single Output

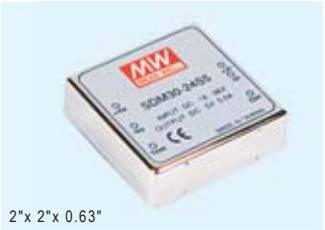

2"x 2"x 0.63"

- 2:1 wide input range
- 1000VDC I/O isolation
- Built-in remote ON/OFF control
- Built-in EMI filter
- Trimming output (±10%)
- Protections: Short circuit / Overload / Over voltage
- Cooling by free air convection
- Compact size, high efficiency
- 100% full load burn-in test
- Low cost, high reliability
- 2 years warranty

Mechanism

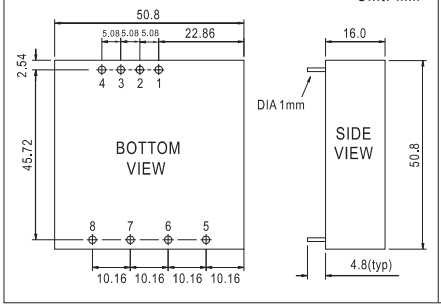

Pin Configuration

Pin No.	Output
1	+Vin
2	-Vin
3	No Pin
4	Control ON/OFF
5	No Pin
6	+Vout
7	-Vout
8	Trim

Voltage set point accuracy ...±2% (max.)(±3% for 3.3VDC models)
Line regulation ..... ±1% (max.)
Load regulation ..... ±1% (max.) @10~100% load
Overload protection ..... Over 105% power limiting, auto-recovery
Over voltage protection ..... 115%~150% rated output voltage
Efficiency (typical) ..... 80% for 12V input
83% for 24V input
85% for 48V input
I/O isolation voltage .....1000VDC(min.)
I/O isolation resistance ..... 100MΩ(min.) @500VDC
Working temperature ..... -25~+85°C(refer to output derating curve)
Storage temperature ..... -25°C to +85°C
Case Material ..... Six-sided shield metal case
EMC .....Compliance to EN55022 class B,
EN61000-4-2,3,4,6,8
Packing ..... 0.1kg ; 150pcs / 15.8kg / 0.97CUFT

Model No.	Input (VDC)	Output (VDC)	Current (A)	R&N (mVp-p)
SDM30-12S3	9.2~18	3.3	5.0	75
SDM30-12S5	9.2~18	5	5.0	75
SDM30-12S12	9.2~18	12	2.1	100
SDM30-12S15	9.2~18	15	1.7	100
SDM30-24S3	18~36	3.3	5.0	75
SDM30-24S5	18~36	5	5.0	75
SDM30-24S12	18~36	12	2.5	100
SDM30-24S15	18~36	15	2.0	100
SDM30-48S3	36~72	3.3	5.0	75
SDM30-48S5	36~72	5	5.0	75
SDM30-48S12	36~72	12	2.5	100
SDM30-48S15	36~72	15	2.0	100

25~30W DC-DC Regulated Dual and Triple Output

2"x 2"x 0.82"

- 2:1 wide input range
- 4:1 wide input range(option)
- 1000VDC I/O isolation
- Built-in remote ON/OFF control
- Built-in EMI filter
- Trimming output (±10%) for dual output
- Protections: Short circuit / Overload
- Cooling by free air convection
- Six-sided shield metal case
- 100% full load burn-in test
- Low cost, high reliability
- 2 years warranty

Mechanism

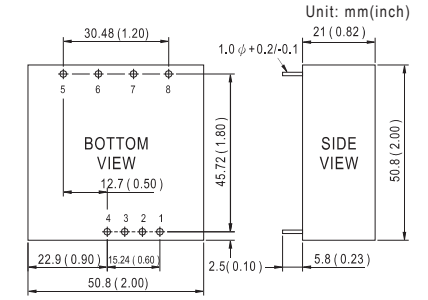

Pin Configuration

Pin No.	Output	
	Dual	Triple
1	R.C.	R.C.
2	No Pin	No Pin
3	-Vin	-Vin
4	+Vin	+Vin
5	+Vout	+Vout
6	COM	+5V
7	-Vout	COM
8	Trim	-Vout

Voltage set point accuracy .... ±2% (max.)
Line regulation ..... ±0.5% (max.) for dual output;
±1% (max.) for triple output
Load regulation ..... ±0.5% (10~100% load)(Dual)
±5% (20~100% load)(Triple)
Efficiency ..... 83% (typical)
Short circuit protection ..... Continuous, auto-recovery
Overload protection .....110%~250%, auto-recovery
I/O isolation voltage ..... 1000VDC (min.)
I/O isolation resistance .....100MΩ (min.)@ 500VDC
Working temperature ..... -40~+85°C (refer to output derating curve)
Storage temperature ..... -40°C to +105°C
Temp. Coefficient ..... ±0.03% / °C (max.)
Case material ..... Six-sided shield metal case
EMC .....Compliance to EN55022 class B,
EN61000-4-2,3,4,5,6,8, FCC part15 class B

❖ Dual Output

Model No.	Input (VDC)	Output (VDC)	Current (mA)	R&N (mVp-p)
DKA30A-05	9~18	±5	±2500	100
DKA30A-12	9~18	±12	±1250	100
DKA30A-15	9~18	±15	±1000	100
DKA30B-05	18~36	±5	±2500	100
DKA30B-12	18~36	±12	±1250	100
DKA30B-15	18~36	±15	±1000	100
DKA30C-05	36~72	±5	±2500	100
DKA30C-12	36~72	±12	±1250	100
DKA30C-15	36~72	±15	±1000	100

❖ Triple Output

Model No.	Input (VDC)	Output (VDC)	Current (mA)	R&N (mVp-p)
TKA30A-B	9~18	+5 / ±12	3500 / ±310	100
TKA30A-C	9~18	+5 / ±15	3500 / ±250	100
TKA30B-B	18~36	+5 / ±12	3500 / ±310	100
TKA30B-C	18~36	+5 / ±15	3500 / ±250	100
TKA30C-B	36~72	+5 / ±12	3500 / ±310	100
TKA30C-C	36~72	+5 / ±15	3500 / ±250	100

DC/DC Converter

40~60W Module Type

50W DC-DC Regulated Single Output

2"x 1"x 0.54"

- 2"x1" compact size
- 2:1 wide input range
- 1500VDC I/O isolation
- High efficiency up to 92%
- Built-in remote ON/OFF control
- Built-in EMI filter
- Trimming output (±10%)
- Protections:
  Short circuit / Overload /
  Input and output over voltage
- Cooling by free air convection
- Six-sided shield metal case
- 100% full load burn-in test
- Low cost, high reliability
- 2 years warranty

Mechanism

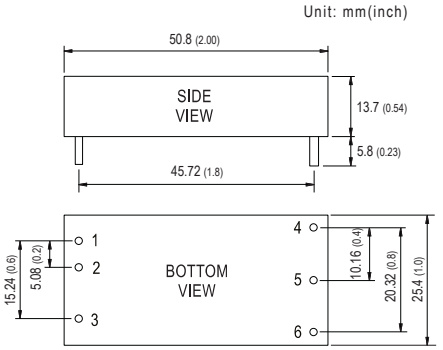

Pin Configuration

Pin No.	Output
1	+Vin
2	-Vin
3	R.C.
4	+Vout
5	-Vout
6	Trim

Voltage set point accuracy .... ±2% (max.)
Line regulation ..... ±0.2% (max.)
Load regulation ..... ±0.5% (max.) @ 10~100% load
Efficiency ..... 92% (typical)
Short circuit protection ..... Continuous, auto-recovery
Overload protection ..... 110%~180%, auto-recovery
I/O isolation voltage ..... 1500VDC (min.)
I/O isolation resistance ..... 100MΩ (min.)@ 500VDC
Working temperature ..... -40~+75°C (refer to output derating curve)
Storage temperature ..... -55°C to +125°C
Temp. Coefficient ..... ±0.03% / °C (max.)
Case material ..... Six-sided shield metal case
EMC ..... Compliance to EN55022 class A,
EN61000-4-2,3,4,5,6,8, FCC part15 class A

Model No.	Input (VDC)	Output (VDC)	Current (A)	R&N (mVp-p)
SKM50B-05	18~36	5	10	60
SKM50B-12	18~36	12	4.17	80
SKM50B-15	18~36	15	3.33	100
SKM50C-05	36~75	5	10	60
SKM50C-12	36~75	12	4.17	80
SKM50C-15	36~75	15	3.33	100

Customer Satisfaction —
Today's effort, tomorrow's reward. Continuously improve CQTS to satisfy customer is our goal.

40~60W DC-DC Regulated Single Output

- 2"x2" compact size
- 2:1 wide input range
- 1500VDC I/O isolation
- High efficiency up to 93%
- Built-in remote ON/OFF control
- Built-in remote sense
- Built-in EMI filter
- Trimming output (±10%)
- Protections:
  Short circuit / Overload /
  Input and output over voltage
- Cooling by free air convection
- 100% full load burn-in test
- Low cost, high reliability
- Output 3.3V/9V models available for SKA40
  Output 3.3V available for SKA60
- 2 years warranty

Mechanism

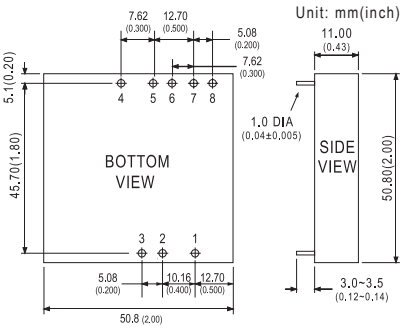

Pin Configuration

Pin No.	Output
1	R.C.
2	-Vin
3	+Vin
4	-R.S
5	+R.S
6	+Vout
7	-Vout
8	Trim

Voltage set point accuracy ...±2% (max.)
Line regulation ..... ±0.5% (max.)
Load regulation ..... ±0.5% (max.) @10~100% load
Overload protection ..... 110%~180%, auto-recovery
Over voltage protection ..... Clamp by TVS diode
Efficiency (typical)..... 92% for SKA40; 93% for SKA60
I/O isolation voltage ..... 1500VDC(min.)
I/O isolation resistance ..... 100MΩ(min.) @500VDC
Working temperature ..... -40~+80°C(refer to output derating curve) for SKA40
-40~+70°C(refer to output derating curve) for SKA60
Storage temperature ..... -55°C to +105°C
Case Material ..... Six-sided shield metal case
EMC ..... Compliance to EN55022 class A,
EN61000-4-2,3,4,5,6,8, FCC part15 classA

Model No.	Input (VDC)	Output (VDC)	Current (A)	R&N (mVp-p)
SKA40A-05	9~18	5	7.00	60
SKA40A-12	9~18	12	3.33	80
SKA40A-15	9~18	15	2.67	100
SKA40B-05	18~36	5	7.00	60
SKA40B-12	18~36	12	3.33	80
SKA40B-15	18~36	15	2.67	100
SKA40C-05	36~75	5	7.00	60
SKA40C-12	36~75	12	3.33	80
SKA40C-15	36~75	15	2.67	100

Model No.	Input (VDC)	Output (VDC)	Current (A)	R&N (mVp-p)
SKA60A-05	9~18	5	12	60
SKA60A-12	9~18	12	5	80
SKA60A-15	9~18	15	4	100
SKA60B-05	18~36	5	12	60
SKA60B-12	18~36	12	5	80
SKA60B-15	18~36	15	4	100
SKA60C-05	36~75	5	12	60
SKA60C-12	36~75	12	5	80
SKA60C-15	36~75	15	4	100

DC/DC Converter

75~100W Module Type

75W DC-DC Half-Brick Regulated Single Output

2.28"x 2.4"x 0.5"

- Half-brick size (2.28"x 2.4"x 0.5") with industry standard pin out
- 2:1 wide input range
- 1500VDC I/O isolation
- High efficiency up to 89%
- Built-in remote ON/OFF control
- Built-in remote sense
- Trimming output (±10%)
- Protections: Short circuit / Over current / Over voltage / Over temperature
- Five-sided shield metal case
- Output 2.5V / 3.3V / 15V available
- Optional heatsink available
- 3 years warranty

Mechanism

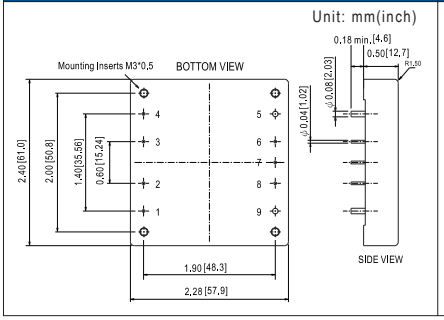

Pin Configuration

Pin No.	Output
1	+Vin
2	R.C.
3	Case
4	-Vin
5	-Vout
6	-R.S.
7	Trim
8	+R.S.
9	+Vout

Voltage set point accuracy ... ±1% (max.)
Line regulation ..... ±0.2% (max.)
Load regulation ..... ±0.2% (max.)
Over current protection ..... 110%~150%, auto-recovery
Over voltage protection ..... 115%~140% rated output voltage, clamp by TVS diode
Over temperature protection .... 100°C±5°C of case temperature
Efficiency ..... 89% (typical)
I/O isolation voltage ..... 1500VDC(min.)
I/O isolation resistance ..... 100MΩ(min.) @500VDC
Working temperature ..... -40~+100° C of case temp.(refer to output derating curve)
Storage temperature ..... -55~+105° C
Safety standards ..... UL60950-1 approved
Case Material ..... Five-sided shield metal case
EMC ..... Compliance to EN55022 class A with external components(refer to "EMC suggestion circuit"), EN61000-4-2,3,4,5,6,8

Model No.	Input (VDC)	Output (VDC)	Current (A)	R&N (mVp-p)
MHB75-12S05	9~18	5	15	75
MHB75-12S12	9~18	12	6.25	100
MHB75-12S24	9~18	24	3.13	240
MHB75-24S05	18~36	5	15	75
MHB75-24S12	18~36	12	6.25	100
MHB75-24S24	18~36	24	3.13	240
MHB75-48S05	36~75	5	15	75
MHB75-48S12	36~75	12	6.25	100
MHB75-48S24	36~75	24	3.13	240

100W DC-DC Half-Brick Regulated Single Output

2.28"x 2.4"x 0.5"

- Half-brick size (2.28"x 2.4"x 0.5") with industry standard pin out
- 2:1 wide input range
- 1500VDC I/O isolation
- High efficiency up to 89%
- Built-in remote ON/OFF control
- Built-in remote sense
- Trimming output (±10%)
- Protections: Short circuit / Over current / Over voltage / Over temperature
- Five-sided shield metal case
- Output 2.5V / 3.3V / 15V available
- Optional heatsink available
- 3 years warranty

Mechanism

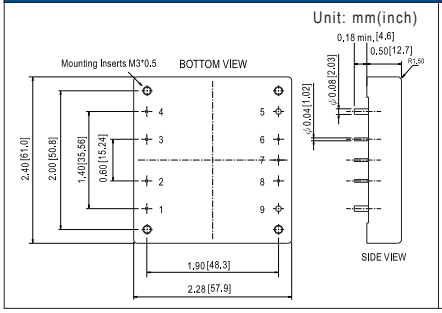

Pin Configuration

Pin No.	Output
1	+Vin
2	R.C.
3	Case
4	-Vin
5	-Vout
6	-R.S.
7	Trim
8	+R.S.
9	+Vout

Voltage set point accuracy ...±1% (max.)
Line regulation ..... ±0.2% (max.)
Load regulation ..... ±0.2% (max.)
Over current protection ..... 110%~140%, auto-recovery
Over voltage protection ..... 115%~140% rated output voltage, clamp by TVS diode
Over temperature protection ..... 100°C±5°C of case temperature
Efficiency ..... 89% (typical)
I/O isolation voltage .....1500VDC(min.)
I/O isolation resistance ..... 100MΩ(min.) @500VDC
Working temperature ..... -40~+100° C of case temp.(refer to output derating curve)
Storage temperature ..... -55~+105° C
Safety standards ..... UL60950-1 approved
Case Material ..... Five-sided shield metal case
EMC ..... Compliance to EN55022 class A with external components(refer to "EMC suggestion circuit"), EN61000-4-2,3,4,5,6,8

Model No.	Input (VDC)	Output (VDC)	Current (A)	R&N (mVp-p)
MHB100-24S05	18~36	5	20	100
MHB100-24S12	18~36	12	8.3	150
MHB100-24S24	18~36	24	4.17	240
MHB100-48S05	36~75	5	20	100
MHB100-48S12	36~75	12	8.3	150
MHB100-48S24	36~75	24	4.17	240

Heat Sink for MHB Series

Order No.	M-C308 (Vertical Fins)	M-C091 (Horizontal Fins)	M-C092 (Horizontal Fins)
Mechanical	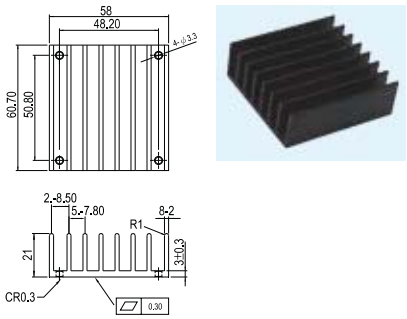	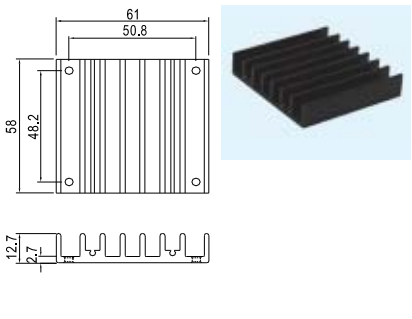	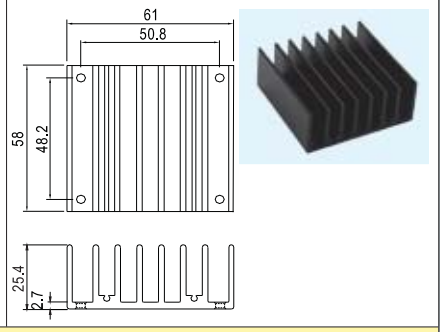

Note: Power module and heat sink should be ordered seperately; The heat sinks can be used with MHB75/100/150 series.

DC/DC Converter

150W Module Type / 5W On Board Type

150W DC-DC Half-Brick Regulated Single Output

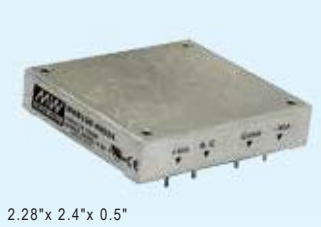

2.28"x 2.4"x 0.5"

- Half-brick size (2.28"x 2.4"x 0.5") with industry standard pin out
- 2:1 wide input range
- 1500VDC I/O isolation
- High efficiency up to 89%
- Built-in remote ON/OFF control
- Built-in remote sense
- Trimming output (±10%)
- Protections: Short circuit / Over current / Over voltage / Over temperature
- Five-sided shield metal case
- Output 2.5V / 3.3V / 15V available
- Optional heatsink available
- 3 years warranty

Mechanism

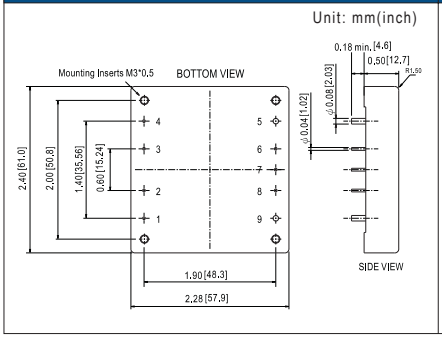

Pin Configuration

Pin No.	Output
1	+Vin
2	R.C.
3	Case
4	-Vin
5	-Vout
6	-R.S.
7	Trim
8	+R.S.
9	+Vout

Voltage set point accuracy ...±1% (max.)
Line regulation ..... ±0.2% (max.)
Load regulation ..... ±0.2% (max.)
Over current protection ..... 110%~150%, auto-recovery
Over voltage protection ..... 115%~140% rated output voltage, clamp by TVS diode
Over temperature protection ..... 100°C±5°C of case temperature
Efficiency ..... 89% (typical)
I/O isolation voltage .....1500VDC(min.)
I/O isolation resistance ..... 100MΩ(min.) @500VDC
Working temperature ..... -40~+100°C of case temp.(refer to output derating curve)
Storage temperature ..... -55~+105°C
Safety standards ..... UL60950-1 approved
Case Material ..... Five-sided shield metal case
EMC ..... Compliance to EN55022 class A with external components(refer to "EMC suggestion circuit"), EN61000-4-2,3,4,5,6,8

Model No.	Input (VDC)	Output (VDC)	Current (A)	R&N (mVp-p)
MHB150-48S05	36~75	5	30	100
MHB150-48S12	36~75	12	12.5	150
MHB150-48S24	36~75	24	6.25	240

Best products also need best service.
We have authorized distributors all over the world. They have sufficient stock for your prompt delivery. Also they can offer you technical support & RMA services. Please contact your local distributors for more product information. You can also contact us at info@meanwell.com for information of your local distributors.

5W DC-DC Regulated Single Output

1.6"x 1"x 0.327"

- 4:1 wide input range
- 1000VDC I/O isolation
- Built-in EMI filter
- Protections: Short circuit / Overload / Over voltage
- Built-in remote ON/OFF control
- Cooling by free air convection
- 100% full load burn-in test
- Low cost, high reliability
- 2 years warranty

Mechanism

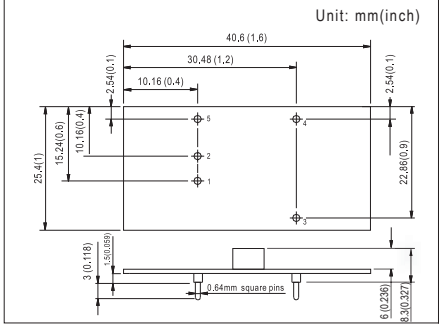

Pin Configuration

Pin No.	Output
1	+Input
2	-Input(GND)
3	+Vout
4	-Vout
5	Control

Voltage set point accuracy ...±2.0% (max.)
Line regulation ..... ±1.0% (max.)
Load regulation ..... ±1~±2% (max.)@10~100% load
Efficiency .....85% (typical)
Short circuit protection ..... Continuous, auto-recovery
Overload protection ..... Over 105% power limiting, auto-recovery
I/O isolation voltage 1000VDC
I/O isolation resistance .....100MΩ (min.)@ 500VDC
Working temperature .....-25~+70°C (refer to output derating curve)
Storage temperature ..... -40~+85°C
Temp. Coefficient .....±0.03% / °C
Safety standards .....IEC60950-1 CB approved by TUV
EMC standards .....EN55022 class B, EN61000-4-2,3,4,5,6,8
Packing .....0.007kg ; 700pcs / 5.9kg / 0.97CUFT

Model No.	Input (VDC)	Output (VDC)	Current (mA)	R&N (mVp-p)
NSD05-12S3	9.2~36	3.3	1200	75
NSD05-12S5	9.2~36	5	1000	75
NSD05-12S12	9.2~36	12	420	75
NSD05-12S15	9.2~36	15	330	75
NSD05-48S3	18~72	3.3	1200	75
NSD05-48S5	18~72	5	1000	75
NSD05-48S12	18~72	12	420	75
NSD05-48S15	18~72	15	330	75

We prvide specification, drawing, test report and more information, please visit our website —
http://www.meanwell.com

48hrs delivery—
We keep enough stock for 95% of standard models at our 2400m² warehouse. We can arrange prompt delivery within 48hrs.

DC/DC Converter

10~15W On Board Type

10W DC-DC Regulated Single and Dual Output

2"x 1"x 0.394"

- 4:1 wide input range
- 1000VDC I/O isolation
- Protections: Short circuit / Overload / Over voltage
- Built-in EMI filter
- Built-in remote ON/OFF control
- Cooling by free air convection
- 100% full load burn-in test
- Low cost, high reliability
- 2 years warranty

Mechanism

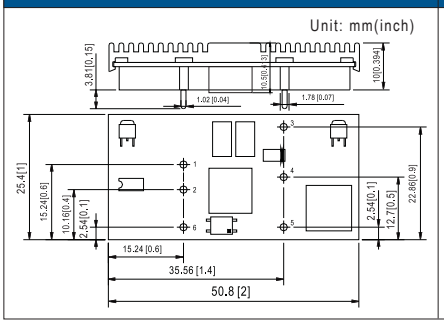

Pin Configuration

Pin No.	Output	
	Single	Dual
1	+Input	+Input
2	-Input (GND)	-Input (GND)
3	+Out	+Out
4	NC	Common
5	-Out	-Out
6	Control	Control

Voltage set point accuracy ..... ±2% (max.)
Line regulation ..... ±1% @10~100% load
Load regulation ..... ±1~±3% @10~100% load
Efficiency ..... 80% (typical)
Short circuit protection ..... Continuous, auto-recovery
Over voltage protection ..... Clamp@115~150%
Shutdown idle current 20mA
I/O isolation voltage 1000VDC
I/O isolation resistance ..... 100MΩ(min.) @500VDC
Working temperature ..... -25~+70°C
Storage temperature ..... -40~+85°C
Temp. coefficient ..... ±0.03% / °C
Safety standards ..... UL60950-1 approved
EMC standards ..... EN55022 class B, EN61000-4-2,3,4,6,8
Packing ..... 0.02kg ; 300pcs / 7.0kg / 0.97CUFT

❖ Single Output

Model No.	Input (VDC)	Output (VDC)	Current (mA)	R&N (mVp-p)
NSD10-12S3	9.8~36	3.3	2500	75
NSD10-12S5	9.8~36	5	2000	75
NSD10-12S9	9.8~36	9	1100	75
NSD10-12S12	9.8~36	12	830	75
NSD10-12S15	9.8~36	15	670	75
NSD10-48S3	22~72	3.3	2500	75
NSD10-48S5	22~72	5	2000	75
NSD10-48S9	22~72	9	1100	75
NSD10-48S12	22~72	12	830	75
NSD10-48S15	22~72	15	670	75

❖ Dual Output

Model No.	Input (VDC)	Output (VDC)	Current (mA)	R&N (mVp-p)
NSD10-12D5	9.8~36	±5	±50~1000	75
NSD10-12D12	9.8~36	±12	±20~420	75
NSD10-12D15	9.8~36	±15	±16~330	75
NSD10-48D5	22~72	±5	±50~1000	75
NSD10-48D12	22~72	±12	±20~420	75
NSD10-48D15	22~72	±15	±16~330	75

15W DC-DC Regulated Single and Dual Output

2"x 1.5"x 0.387"

- 4:1 wide input range
- 1500VDC I/O isolation
- Protections: Short circuit / Overload / Over voltage
- Built-in EMI filter
- Output voltage trimming function
- Built-in remote ON/OFF control
- Cooling by free air convection
- 100% full load burn-in test
- Low cost, high reliability
- 2 years warranty

Mechanism

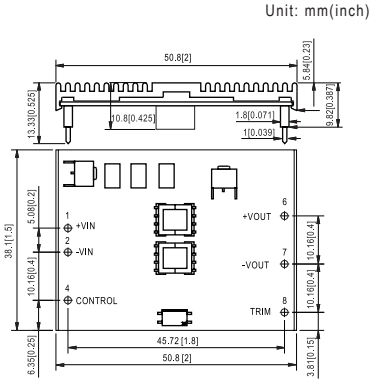

Pin Configuration

Pin No.	Output	
	Single	Dual
1	+Vin	+Vin
2	-Vin	-Vin
3	No Pin	No Pin
4	Control	Control
5	No Pin	+Vout
6	+Vout	Common
7	-Vout	-Vout
8	Trim	Trim

Voltage set point accuracy ..... ±2% (max.)
Line regulation ..... ±1% @10~100% load
Load regulation ..... ±1~±3% @10~100% load
Efficiency ..... 85% (typical)
Short circuit protection ..... Continuous, auto-recovery
Over voltage protection ..... Clamp@115~150%
Shutdown idle current 20mA
I/O isolation voltage 1500VDC
I/O isolation resistance ..... 100MΩ(min.) @500VDC
Working temperature ..... -25~+70°C
Storage temperature ..... -40~+85°C
Temp. coefficient ..... ±0.03% / °C
Safety standards ..... UL60950-1 approved
EMC standards ..... EN55022 class B, EN61000-4-2,3,4,6,8
Packing ..... 0.03kg ; 180pcs / 6.4kg / 0.97CUFT

❖ Single Output

Model No.	Input (VDC)	Output (VDC)	Current (mA)	R&N (mVp-p)
NSD15-12S3	9.4~36	3.3	3750	100
NSD15-12S5	9.4~36	5	3000	75
NSD15-12S12	9.4~36	12	1250	75
NSD15-12S15	9.4~36	15	1000	75
NSD15-48S3	18~72	3.3	3750	100
NSD15-48S5	18~72	5	3000	75
NSD15-48S12	18~72	12	1250	75
NSD15-48S15	18~72	15	1000	75

❖ Dual Output

Model No.	Input (VDC)	Output (VDC)	Current (mA)	R&N (mVp-p)
NSD15-12D5	9.4~36	±5	±70~1500	100
NSD15-12D12	9.4~36	±12	±30~620	100
NSD15-12D15	9.4~36	±15	±20~500	100
NSD15-48D5	18~72	±5	±70~1500	100
NSD15-48D12	18~72	±12	±30~620	100
NSD15-48D15	18~72	±15	±20~500	100

DC/DC Converter 12.5~60W On Board Type / 5~15W PCB Type

12.5~60W Single Output Non-isolated DC-DC Converter

- Non-isolated, fix-frequency at 250kHz
- 3:1 wide input range for 5~15V output
- ±2% output voltage accuracy
- High efficiency up to 96%
- Built-in remote ON/OFF control
- Compact size
- Cooling by free air convection
- Economical open frame design
- Protections: Short circuit / Overload / Over voltage
- 2 years warranty

❖ NID30 Series

Mechanism

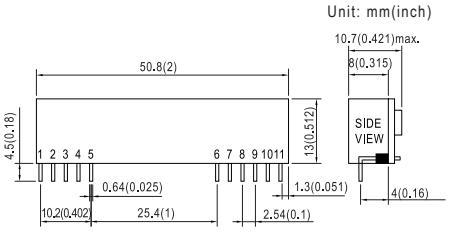

Pin Configuration

Pin No.	Output
1,2,3,4	+Vout
5,6	COM
7,8	+Vin
9,10	N.C.
11	R.C.

❖ NID60 Series

Mechanism

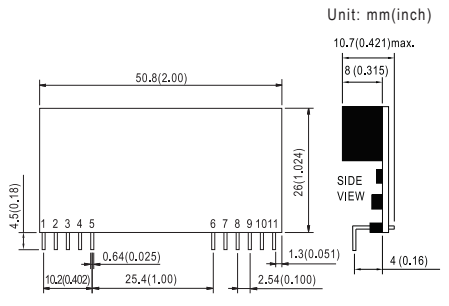

Pin Configuration

Pin No.	Output
1,2,3,4	+Vout
5,6	COM
7,8	+Vin
9,10	N.C.
11	R.C.

Voltage set point accuracy ..... ±2% (max.)
Line regulation ..... ±0.5%
Load regulation ..... ±0.5% @ 10~100% load
Efficiency ..... 96% (typical)
Short circuit protection ..... Continuous, auto-recovery
Overload protection ..... 120%~300%, auto-recovery
Over voltage protection ..... Clamp by TVS Diode
Working temperature ..... -25~+65°C (refer to derating curve)
Storage temperature ..... -25~+105°C
Temp. coefficient ..... ±0.03% / °C

❖ NID30 Series

Model No.	Input	Output	R&N	Effi
NID30S24-05	20~53V	5V, 0~2.50A	100mV	91%
NID30S24-12	20~53V	12V, 0~2.50A	120mV	95%
NID30S24-15	20~53V	15V, 0~2.00A	150mV	96%
NID30S48-24	30~53V	24V, 0~1.25A	200mV	93%

❖ NID60 Series

Model No.	Input	Output	R&N	Effi
NID60S24-05	20~53V	5V, 0~4.0A	100mV	90%
NID60S24-12	20~53V	12V, 0~4.0A	120mV	95%
NID60S24-15	20~53V	15V, 0~4.0A	150mV	96%
NID60S48-24	30~53V	24V, 0~2.5A	200mV	95%

5W Single Output DC-DC Converter

- 2:1 wide input range
- 2000VAC I/O isolation
- Protections: Short circuit / Overload / Over voltage / Over temp.
- Built-in EMI filter, low ripple noise
- 100% full load burn-in test
- Low cost, high reliability
- 2 years warranty

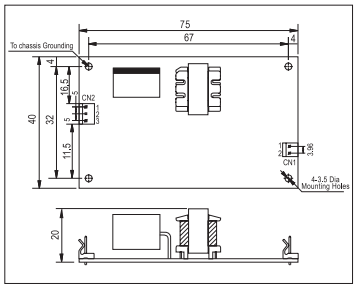

Line and load regulation ... ±1.0% (max.)
Overload protection ..... >105% fold back current limiting, auto-recovery
Over voltage protection .... 115%~135% rated output voltage
Withstand voltage ..... I/P-O/P: 2kVAC, I/P-FG: 1.5kVAC, 1 minute
Isolation resistance ..... 100MΩ(min.) @500VDC
Working temperature ..... -10~+60°C (refer to output derating curve)
Safety standards ..... Meet LVD
EMC standards ..... EN55022 class B, EN61000-4-2,3,4,6,8
Connection ..... 3P, 2P / 3.96mm pitch, Molex 5285-03, 5273-02
Packing ..... 0.05kg ; 120pcs / 6.25kg / 1.0CUFT

Model No.	Input	Output	R&N	Effi.
PSD-05-5	36~72V	5V, 0~1.0A	50mV	75%
PSD-05-12	36~72V	12V, 0~0.45A	100mV	78%
PSD-05-24	36~72V	24V, 0~0.22A	150mV	78%

15W Single Output DC-DC Converter

- 2:1 wide input range
- 2000VAC I/O isolation
- Protections: Short circuit / Overload / Over voltage / Polarity
- Built-in EMI filter, low ripple noise
- 100% full load burn-in test
- Low cost, high reliability
- 2 years warranty

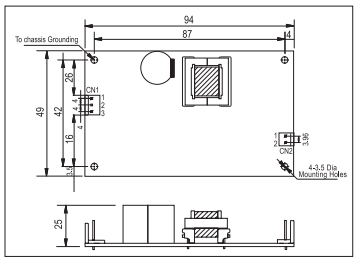

Line and load regulation .... ±1.0% (max.)
Overload protection ..... 105%~150% hiccup mode, auto-recovery
Over voltage protection ..... 115%~135% rated output voltage
Withstand voltage ..... I/P-O/P: 2kVAC, I/P-FG: 1.5kVAC, 1 minute
Isolation resistance ..... 100MΩ(min.) @500VDC
Working temperature ..... -10~+60°C (refer to output derating curve)
Safety standards ..... Meet LVD
EMC standards ..... EN55022 class B, EN61000-4-2,3,4,6,8
Connection ..... 3P, 2P / 3.96mm pitch, JST B3P/B2P-VH
Packing ..... 0.081kg ; 120pcs / 10.72kg

Model No.	Input	Output	R&N	Effi.
PSD-15A-5	9.2~18V	5V, 0~3.0A	50mV	74%
PSD-15A-12	9.2~18V	12V, 0~1.25A	100mV	67%
PSD-15A-24	9.2~18V	24V, 0~0.6A	100mV	72%
PSD-15B-5	18~36V	5V, 0~3.0A	50mV	78%
PSD-15B-12	18~36V	12V, 0~1.25A	100mV	78%
PSD-15B-24	18~36V	24V, 0~0.6A	100mV	78%
PSD-15C-5	36~72V	5V, 0~3.0A	50mV	78%
PSD-15C-12	36~72V	12V, 0~1.25A	100mV	78%
PSD-15C-24	36~72V	24V, 0~0.6A	100mV	79%

DC/DC Converter

30~45W PCB Type / 15~25W Enclosed

30W Single Output DC-DC Converter

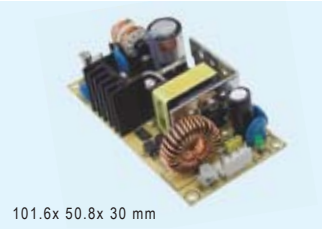

- 2:1 wide input range
- Protections:Short circuit / Overload / Over voltage / Reverse polarity
- 1500VAC I/O isolation
- Cooling by free air convection
- Built-in EMI filter, low ripple noise
- 100% full load burn-in test
- Low cost, high reliability
- 2 years warranty

DC adjustment range ..... 5V: 4.5~5.5V, 12V: 11~13.5V, 24V: 22~26V
Line and load regulation .. ±1% (max.)
Overload protection ..... 105%~150% hiccup mode, auto-recovery
Over voltage protection ... 115%~150% rated output voltage
Withstand voltage ..... I/P-O/P: 1.5kVAC, I/P-FG: 1.5kVAC, 1 minute
Working temperature ..... -20~+60°C (refer to output derating curve)
EMC standards ..... EN55022 class B, EN61000-4-2,3,4,6,8, EN55024
Connection ..... 3P, 4P / 3.96mm pitch, JST B3P/B4P-VH-B

Model No.	Input	Output	R&N	Effi.
PSD-30A-05	9~18V	5V, 0~5.0A	100mV	77%
PSD-30A-12	9~18V	12V, 0~2.5A	120mV	77%
PSD-30A-24	9~18V	24V, 0~1.25A	150mV	78%
PSD-30B-05	18~36V	5V, 0~5.0A	100mV	79%
PSD-30B-12	18~36V	12V, 0~2.5A	120mV	80%
PSD-30B-24	18~36V	24V, 0~1.25A	150mV	83%
PSD-30C-05	36~72V	5V, 0~5.0A	100mV	80%
PSD-30C-12	36~72V	12V, 0~2.5A	120mV	82%
PSD-30C-24	36~72V	24V, 0~1.25A	150mV	83%

45W Single Output DC-DC Converter

- 2:1 wide input range
- Protections:Short circuit / Overload / Over voltage / Reverse polarity
- Cooling by free air convection
- Built-in EMI filter, low ripple noise
- 100% full load burn-in test
- Fixed switching frequency at 96kHz
- Low cost
- 2 years warranty

DC adjustment range .....5V: 4.5~5.5V, 12V: 10.8~13.2V, 24V: 21.6~26.4V
Line and load regulation .... ±1% (max.)
Overload protection ..... 105%~160% shut down, re-power on to recover
Over voltage protection ..... 115%~135% rated output voltage
Withstand voltage ..... I/P-O/P: 1.5kVAC, I/P-FG: 1.5kVAC, 1 minute
Working temperature .....-10~+60°C (refer to output derating curve)
Safety standards .....EN60950-1 CB approved by TUV
EMC standards ..... EN55022 class B, EN61000-4-2,3,4,6,8, EN55024
Connection .....2P, 6P / 3.96mm pitch, Molex 5277-02, 5273-06
Packing ..... 0.19kg ; 72pcs / 15.6kg / 1.35CUFT

Model No.	Input	Output	R&N	Effi.
PSD-45A-05	9.2~18V	5V, 0~6.0A	100mV	74%
PSD-45A-12	9.2~18V	12V, 0~2.5A	120mV	78%
PSD-45A-24	9.2~18V	24V, 0~1.25A	150mV	79%
PSD-45B-05	18~36V	5V, 0~9.0A	100mV	77%
PSD-45B-12	18~36V	12V, 0~3.75A	120mV	82%
PSD-45B-24	18~36V	24V, 0~1.875A	150mV	85%
PSD-45C-05	37~72V	5V, 0~9.0A	100mV	80%
PSD-45C-12	37~72V	12V, 0~3.75A	120mV	83%
PSD-45C-24	37~72V	24V, 0~1.875A	150mV	86%

15W Single Output DC-DC Converter

- 2:1 wide input range
- 2000VAC I/O isolation
- Cooling by free air convection
- Protections: Short circuit / Over load / Over voltage
- Built-in EMI filter, low ripple noise
- 100% full load burn-in test
- Low cost, high reliability
- 2 years warranty

DC adjustment range .....5V: 4.75~5.5V, 12V: 10.8~13.2V, 24V: 21.6~26.4V
Line and load regulation .... ±0.5% (max.)
Overload protection ..... 105%~160% hiccup mode, auto-recovery
Over voltage protection ..... 115%~135% rated output voltage
Withstand voltage ..... I/P-O/P: 2kVAC, I/P-FG: 1.5kVAC, 1 minute
Working temperature .....-10~+60°C (refer to output derating curve)
Safety standard ..... Meet LVD
EMC standards ..... EN55022 class B, EN61000-4-2,3,4,6,8
Packing ..... 0.18kg ; 60pcs / 11.8kg

Model No.	Input	Output	R&N	Effi.
SD-15A-5	9.2~18V	5V, 0~3.0A	100mV	68%
SD-15A-12	9.2~18V	12V, 0~1.25A	120mV	72%
SD-15A-24	9.2~18V	24V, 0~0.625A	150mV	70%
SD-15B-5	18~36V	5V, 0~3.0A	100mV	76%
SD-15B-12	18~36V	12V, 0~1.25A	120mV	76%
SD-15B-24	18~36V	24V, 0~0.625A	150mV	77%
SD-15C-5	36~72V	5V, 0~3.0A	100mV	75%
SD-15C-12	36~72V	12V, 0~1.25A	120mV	79%
SD-15C-24	36~72V	24V, 0~0.625A	150mV	78%

25W Single Output DC-DC Converter

- 2:1 wide input range
- 1500VAC I/O isolation
- Protections: Short circuit / Overload / Over voltage
- Built-in EMI filter, low ripple noise
- 100% full load burn-in test
- Low cost, high reliability
- 2 years warranty

DC adjustment range ..... 5V: 4.5~5.5V, 12V: 11~16V, 24V: 23~30V
Line and load regulation .... ±0.5% (max.)
Overload protection ..... 105%~150% hiccup mode, auto-recovery
Over voltage protection ..... 115%~165% rated output voltage
Withstand voltage ..... I/P-O/P: 2kVAC, I/P-FG: 1.5kVAC, 1 minute
Isolation resistance .....100MΩ(min.) @500VDC
Working temperature .....-10~+60°C (refer to output derating curve)
Safety standards ..... Meet LVD
EMC standards ..... EN55022 class B, EN61000-4-2,3,4,6,8
Packing .....0.38kg ; 45pcs / 17.8kg / 0.9CUFT

Model No.	Input	Output	R&N	Effi.
SD-25A-5	9.2~18V	5V, 0~5.0A	100mV	71%
SD-25A-12	9.2~18V	12V, 0~2.1A	120mV	72%
SD-25A-24	9.2~18V	24V, 0~1.1A	150mV	75%
SD-25B-5	19~36V	5V, 0~5.0A	100mV	72%
SD-25B-12	19~36V	12V, 0~2.1A	120mV	75%
SD-25B-24	19~36V	24V, 0~1.1A	150mV	78%
SD-25C-5	36~72V	5V, 0~5.0A	100mV	74%
SD-25C-12	36~72V	12V, 0~2.1A	120mV	78%
SD-25C-24	36~72V	24V, 0~1.1A	150mV	81%

DC/DC Converter

50~200W Enclosed Single Output

50W Single Output DC-DC Converter

CE

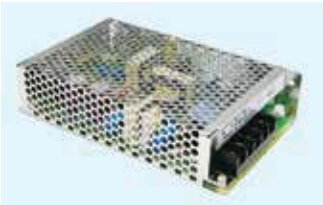

CASE: 901 159x 97x 38 mm

- 2:1 wide input range
- 1500VAC I/O isolation
- Protections: Short circuit / Over load / Over voltage
- Built-in EMI filter, low ripple noise
- Cooling by free air convection
- 100% full load burn-in test
- Low cost, high reliability
- 2 years warranty

DC adjustment range ..... 5V: 4.5~5.5V, 12V: 11~16V, 24V: 23~30V
Line and load regulation .... ±0.5% (max.)
Overload protection ..... 105%~150% hiccup mode, auto-recovery
Over voltage protection ..... 115%~165% rated output voltage
Withstand voltage ..... I/P-O/P: 1.5kVAC, I/P-FG: 1.5kVAC, 1 minute
Isolation resistance ..... 100MΩ(min.) @500VDC
Working temperature ..... -10~+60°C (refer to output derating curve)
Safety standard ..... Meet LVD
EMC standards ..... EN55022 class B, EN61000-4-2,3,4,6,8
Packing ..... 0.53kg ; 24pcs / 12.7kg / 0.75CUFT

Model No.	Input	Output	R&N	Effi.
SD-50A-5	9.2~18V	5V, 0~10A	100mV	70%
SD-50A-12	9.2~18V	12V, 0~4.2A	120mV	72%
SD-50A-24	9.2~18V	24V, 0~2.1A	150mV	74%
SD-50B-5	19~36V	5V, 0~10A	100mV	73%
SD-50B-12	19~36V	12V, 0~4.2A	120mV	75%
SD-50B-24	19~36V	24V, 0~2.1A	150mV	80%
SD-50C-5	36~72V	5V, 0~10A	100mV	76%
SD-50C-12	36~72V	12V, 0~4.2A	120mV	78%
SD-50C-24	36~72V	24V, 0~2.1A	150mV	83%

100W Single Output DC-DC Converter

CB CE
(D type)

CASE: 902 199x 98x 38 mm

- 2:1 wide input range
- 1500VAC I/O isolation
- Protections: Short circuit / Overload / Over voltage
- Built-in EMI filter, low ripple noise
- 100% full load burn-in test
- Low cost, high reliability
- 2 years warranty

DC adjustment range ..... 5V: 4.5~5.5V, 12V: 11~16V, 24V: 23~30V
Line regulation ..... ±0.5% (max.)
Load regulation ..... ±0.5% (max.)
Overload protection ..... 105%~135% hiccup mode, auto-recovery
Over voltage protection ..... 115%~165% rated output voltage
Withstand voltage ..... I/P-O/P: 1.5kVAC, I/P-FG: 1.5kVAC, 1 minute
Isolation resistance ..... 100MΩ(min.) @500VDC
Working temperature ..... -10~+60°C (refer to output derating curve)
Safety standards ..... Meet LVD, EN60950-1 CB approved by TUV (D type only)
EMC standards ..... EN55022 class B, EN61000-4-2,3,4,6,8
Packing ..... 0.65kg ; 20pcs / 13.8kg / 0.8CUFT

Model No.	Input	Output	R&N	Effi.
SD-100B-5	19~36V	5V, 0~20A	100mV	74%
SD-100B-12	19~36V	12V, 0~8.5A	120mV	75%
SD-100B-24	19~36V	24V, 0~4.2A	150mV	78%
SD-100C-5	36~72V	5V, 0~20A	100mV	75%
SD-100C-12	36~72V	12V, 0~8.5A	120mV	77%
SD-100C-24	36~72V	24V, 0~4.2A	150mV	81%
SD-100D-5	72~144V	5V, 0~20A	100mV	76%
SD-100D-12	72~144V	12V, 0~8.5A	120mV	80%
SD-100D-24	72~144V	24V, 0~4.2A	150mV	83%

150W Single Output DC-DC Converter

CB CE
(D type)

CASE: 906 199x 110x 50 mm

- 2:1 wide input range
- 1500VAC I/O isolation
- Protections: Short circuit / Over load / Over voltage
- Built-in EMI filter, low ripple noise
- Cooling by free air convection
- 100% full load burn-in test
- Low cost, high reliability
- 2 years warranty

DC adjustment range ..... 12V: 11~16V, 24V: 23~30V
Line regulation ..... ±0.5% (max.)
Load regulation ..... ±0.5% (max.)
Overload protection ..... 105%~135% hiccup mode, auto-recovery
Over voltage protection ..... 130%~165% rated output voltage
Withstand voltage ..... I/P-O/P: 1.5kVAC, I/P-FG: 1.5kVAC, 1 minute
Isolation resistance ..... 100MΩ(min.) @500VDC
Working temperature ..... -10~+60°C (refer to output derating curve)
Safety standards ..... Meet LVD, EN60950-1 CB approved by TUV (D type only)
EMC standards ..... EN55022 class B, EN61000-4-2,3,4,6,8
Packing ..... 0.86kg ; 16pcs / 14.5kg / 0.95CUFT

Model No.	Input	Output	R&N	Effi.
SD-150B-12	19~36V	12V, 0~12.5A	120mV	75%
SD-150B-24	19~36V	24V, 0~6.3A	150mV	77%
SD-150C-12	36~72V	12V, 0~12.5A	120mV	77%
SD-150C-24	36~72V	24V, 0~6.3A	150mV	80%
SD-150D-12	72~144V	12V, 0~12.5A	120mV	79%
SD-150D-24	72~144V	24V, 0~6.3A	150mV	82%

200W Single Output DC-DC Converter

c UL us CB CE
(SD-200C-24) (D type)

CASE: 912H 215x 115x 50 mm

- 2:1 wide input range
- 1500VAC I/O isolation
- Protections: Short circuit / Overload / Over voltage / Over temp.
- Cooling by free air convection
- 100% full load burn-in test
- 2 years warranty

DC adjustment range ..... 5V: 4.5~5.5V, 12V: 11~16V, 24V: 23~30V, 48V: 43~53V
Voltage tolerance..... ±2% (max.)
Overload protection ..... 105%~135% shut off, re-power on to recover
Over voltage protection ..... 110%~167% rated output voltage
Withstand voltage ..... I/P-O/P: 1.5kVAC, I/P-FG: 2kVAC, 1 minute
Working temperature ..... -20~+60°C (refer to output derating curve)
Safety standards ..... Meet LVD, EN60950-1 CB approved by TUV (D type only)
EMC standards ..... EN55022 class B, EN61000-4-2,3,4,6,8
Packing ..... 1.1kg ; 12pcs / 14.4kg / 0.92CUFT

Model No.	Input	Output	R&N	Effi.
SD-200B-5	19~36V	5V, 0~34.0A	100mV	79%
SD-200B-12	19~36V	12V, 0~16.7A	120mV	82%
SD-200B-24	19~36V	24V, 0~8.40A	150mV	85%
SD-200B-48	19~36V	48V, 0~4.20A	200mV	86%
SD-200C-5	36~72V	5V, 0~40.0A	100mV	81%
SD-200C-12	36~72V	12V, 0~16.7A	120mV	84%
SD-200C-24	36~72V	24V, 0~8.40A	150mV	86%
SD-200C-48	36~72V	48V, 0~4.20A	200mV	86%
SD-200D-5	72~144V	5V, 0~40.0A	100mV	82%
SD-200D-12	72~144V	12V, 0~16.7A	120mV	82%
SD-200D-24	72~144V	24V, 0~8.40A	150mV	84%
SD-200D-48	72~144V	48V, 0~4.20A	200mV	90%

DC/DC Converter 350~1000W Enclosed Single Output

350W Single Output DC-DC Converter

CB CE
(D type)

- 2:1 wide input range
- 1500VAC I/O isolation
- Protections: Short circuit / Over load / Over voltage / Over temp.
- Forced air cooling by built-in DC fan
- 100% full load burn-in test
- 2 years warranty

DC adjustment range ..... 5V: 4.5~5.5V, 12V: 11~16V, 24V: 23~30V, 48V: 43~53V
Voltage tolerance ..... ±2% (max.)
Overload protection ..... 105%~135% shut off, re-power on to recover
Over voltage protection .. 110%~167% rated output voltage
Withstand voltage ..... I/P-O/P: 1.5kVAC, I/P-FG: 2kVAC, 1 minute
Working temperature .....-20~+60°C (refer to output derating curve)
Safety standards ..... Meet LVD, EN60950-1 CB approved by TUV (D type only)
EMC standards .....EN55022 class B, EN61000-4-2,3,4,6,8
Packing ..... 1.1kg ; 12pcs / 14.4kg / 0.92CUFT

Model No.	Input	Output	R&N	Effi.
SD-350B-5	19~36V	5V, 0~57.0A	100mV	74%
SD-350B-12	19~36V	12V, 0~27.5A	120mV	80%
SD-350B-24	19~36V	24V, 0~14.6A	150mV	80%
SD-350B-48	19~36V	48V, 0~7.30A	200mV	84%
SD-350C-5	36~72V	5V, 0~60.0A	100mV	76%
SD-350C-12	36~72V	12V, 0~27.5A	120mV	81%
SD-350C-24	36~72V	24V, 0~14.6A	150mV	81%
SD-350C-48	36~72V	48V, 0~7.30A	200mV	82%
SD-350D-5	72~144V	5V, 0~60.0A	100mV	78%
SD-350D-12	72~144V	12V, 0~29.2A	120mV	83%
SD-350D-24	72~144V	24V, 0~14.6A	150mV	87%
SD-350D-48	72~144V	48V, 0~7.30A	200mV	89%

500W Single Output DC-DC Converter

CB CE

- 4:1 & 2:1 DC input range
- DC input active surge current limiting
- Protections: Short circuit / Overload / Over voltage / Over temp./ Input polarity
- 2000VAC I/O Isolation
- Forced air cooling by built-in DC fan with fan speed control function
- Output OK signal
- Built-in remote ON/OFF control
- Built-in remote sense function
- 3 years warranty

DC adjustment range ..... 12V: 11~15V, 24V: 23~30V, 48V: 46~60V
Line regulation ..... ±0.5% (max.)
Load regulation ..... ±0.5% (max.)
Overload protection ..... 105%~125% constant current limiting, shut off after 5 sec., re-power on to recover
Over voltage protection ..... 130%~160% rated output voltage
Withstand voltage ..... I/P-O/P: 2kV, I/P-FG: 2kV, 1 minute
Isolation resistance .....100MΩ(min.) @500VDC
Working temperature .....-20~+60°C (refer to output derating curve)
Safety standards ..... IEC60950-1 CB approved by TUV
EMC standards ..... EN55022 class B, EN61000-4-2,3,4,6,8
Packing .....1.15kg ; 12pcs / 14.8kg / 0.92CUFT

Model No.	Input	Output	R&N	Effi.
SD-500L-12	19~72V	12V, 0~40A	150mV	86%
SD-500L-24	19~72V	24V, 0~21A	150mV	88%
SD-500L-48	19~72V	48V, 0~10.5A	150mV	89%
SD-500H-12	72~144V	12V, 0~40A	150mV	87%
SD-500H-24	72~144V	24V, 0~21A	150mV	89%
SD-500H-48	72~144V	48V, 0~10.5A	150mV	90%

1000W Single Output DC-DC Converter

CB CE

- 4:1 & 2:1 wide input range
- 2000VAC I/O Isolation
- Protections: Short circuit / Overload / Over voltage / Over temp.
- Forced air cooling by built-in DC fan
- High power density 10.7W/inch^3
- 1U low profile 41mm
- Output OK signal
- 12V / 0.25A auxiliary output
- Built-in remote ON/OFF control
- Built-in remote sense function
- 3 years warranty

DC adjustment range ..... 12V: 11~15V, 24V: 23~30V, 48V: 46~60V
Line regulation ..... ±0.5% (max.)
Load regulation ..... ±0.5% (max.)
Overload protection ..... 105%~125% constant current limiting, shut off after 5 sec., re-power on to recover
Over voltage protection ..... 130%~160% rated output voltage
Withstand voltage ..... I/P-O/P: 2kV, I/P-FG: 1.5kV, 1 minute
Isolation resistance .....100MΩ(min.) @500VDC
Working temperature .....-20~+60°C (refer to output derating curve)
Safety standards ..... IEC60950-1 CB approved by TUV
EMC standards ..... EN55022 class B, EN61000-4-2,3,4,6,8
Packing ..... 1.94kg ; 6pcs / 12.6kg / 0.99CUFT

Model No.	Input	Output	R&N	Effi.
SD-1000L-12	19~72V	12V, 0~60A	150mV	84%
SD-1000L-24	19~72V	24V, 0~40A	150mV	88%
SD-1000L-48	19~72V	48V, 0~21A	150mV	90%
SD-1000H-12	72~144V	12V, 0~60A	150mV	85%
SD-1000H-24	72~144V	24V, 0~40A	150mV	89%
SD-1000H-48	72~144V	48V, 0~21A	150mV	92%

- 3 stage charging
- Universal AC input / Full range
- 1U low profile 41mm
- Built-in active PFC function
- High efficiency up to 93%
- Forced air cooling by built-in DC fan with fan speed control
- Vo and Io can be adjusted
- Protections: Short circuit / Over voltage / Over temperature
- Built-in remote ON-OFF control
- Built-in CANBus interface
- Output models: 14.4V/28.8V/57.6V
- Dimension(LxWxH): 300x 85x 41mm
- 5 years warranty

DC/DC Converter 100~300W Railway Single Output

Features

- Compliance to EN50155 and EN45545-2 railway standard
- 2:1 wide input range
- 4000VDC I/O isolation
- Protections:
  Short circuit / Overload / Over voltage /
  Input reverse polarity / Over temp.(RSD-150/200/300)
- Cooling by free air convection
- Built-in constant current limiting circuit
- 1U low profile
- All using 105°C long life electrolytic capacitors
- Half encapsulated
- 100% full load burn-in test
- 3 years warranty

General Specification (Please refer to www.meanwell.com for detail spec.)

Model No.		RSD-100	RSD-150	RSD-200	RSD-300
Line regulation (max.)		±0.5%			
Load regulation (max.)		±1%			
Overload protection	Range	105%~135%			
	Type	Constant current limiting, recovers automatically after fault condition is removed			
Over voltage protection		115%~135% Shut down O/P voltage, re-power on to recover			115%~140%
Withstand voltage		I/P-O/P: 4kVDC, I/P-FG: 2.5kVDC, O/P-FG: 2.5kVDC, 1 minute			
Isolation resistance		100MΩ(min.) @500VDC			
Working temperature		-40~+70°C (refer to output derating curve)			
Safety standards		Meet IEC60950-1(LVD)			
EMC standards		EN55022 class B, EN50121-3-2, EN61000-4-2,3,4,5,6,8			
Railway standard		EN50155 / IEC60571; EN45545-2			
Dimension (LxWxH)(mm)		161x68x36	189x77x36	191x86x40	216x97x40
Packing		24pcs / 15.4kg	15pcs / 13kg	12pcs / 12.3kg	12pcs / 15.3kg

100W — RSD-100

Model No.	Input (1 sec / continuous)	Output	R&N	Effi.
RSD-100B-5	14.4~33.6V / 16.8~31.2V	5V, 0~20A	100mV	88.0%
RSD-100B-12	14.4~33.6V / 16.8~31.2V	12V, 0~8.4A	120mV	89.0%
RSD-100B-24	14.4~33.6V / 16.8~31.2V	24V, 0~4.2A	150mV	89.0%
RSD-100C-5	28.8~67.2V / 33.6~62.4V	5V, 0~20A	100mV	89.0%
RSD-100C-12	28.8~67.2V / 33.6~62.4V	12V, 0~8.4A	120mV	91.0%
RSD-100C-24	28.8~67.2V / 33.6~62.4V	24V, 0~4.2A	150mV	91.0%
RSD-100D-5	57.6~154V / 67.2~143V	5V, 0~20A	100mV	89.5%
RSD-100D-12	57.6~154V / 67.2~143V	12V, 0~8.4A	120mV	91.0%
RSD-100D-24	57.6~154V / 67.2~143V	24V, 0~4.2A	150mV	90.0%

150W — RSD-150

Model No.	Input (1 sec / continuous)	Output	R&N	Effi.
RSD-150B-5	14.4~33.6V / 16.8~31.2V	5V, 0~30A	100mV	89%
RSD-150B-12	14.4~33.6V / 16.8~31.2V	12V, 0~12.5A	120mV	90%
RSD-150B-24	14.4~33.6V / 16.8~31.2V	24V, 0~6.3A	150mV	90%
RSD-150C-5	28.8~67.2V / 33.6~62.4V	5V, 0~30A	100mV	90%
RSD-150C-12	28.8~67.2V / 33.6~62.4V	12V, 0~12.5A	120mV	92%
RSD-150C-24	28.8~67.2V / 33.6~62.4V	24V, 0~6.3A	150mV	91%
RSD-150D-5	57.6~154V / 67.2~143V	5V, 0~30A	100mV	90%
RSD-150D-12	57.6~154V / 67.2~143V	12V, 0~12.5A	120mV	92%
RSD-150D-24	57.6~154V / 67.2~143V	24V, 0~6.3A	150mV	91%

200W — RSD-200

Model No.	Input (1 sec / continuous)	Output	R&N	Effi.
RSD-200B-12	14.4~33.6V / 16.8~31.2V	12V, 0~16.7A	120mV	89%
RSD-200B-24	14.4~33.6V / 16.8~31.2V	24V, 0~8.4A	150mV	89%
RSD-200B-48	14.4~33.6V / 16.8~31.2V	48V, 0~4.2A	180mV	89%
RSD-200C-12	28.8~67.2V / 33.6~62.4V	12V, 0~16.7A	120mV	91%
RSD-200C-24	28.8~67.2V / 33.6~62.4V	24V, 0~8.4A	150mV	91%
RSD-200C-48	28.8~67.2V / 33.6~62.4V	48V, 0~4.2A	180mV	91%
RSD-200D-12	57.6~154V / 67.2~143V	12V, 0~16.7A	120mV	91%
RSD-200D-24	57.6~154V / 67.2~143V	24V, 0~8.4A	150mV	91%
RSD-200D-48	57.6~154V / 67.2~143V	48V, 0~4.2A	180mV	91%

300W — RSD-300

Model No.	Input (1 sec / continuous)	Output	R&N	Effi.
RSD-300B-5	14.4~33.6V / 16.8~31.2V	5V, 0~42A	100mV	89.0%
RSD-300B-12	14.4~33.6V / 16.8~31.2V	12V, 0~22.5A	120mV	89.5%
RSD-300B-24	14.4~33.6V / 16.8~31.2V	24V, 0~11.3A	150mV	90.0%
RSD-300B-48	14.4~33.6V / 16.8~31.2V	48V, 0~5.7A	180mV	91.5%
RSD-300C-5	28.8~67.2V / 33.6~62.4V	5V, 0~42A	100mV	90.5%
RSD-300C-12	28.8~67.2V / 33.6~62.4V	12V, 0~25A	120mV	91.0%
RSD-300C-24	28.8~67.2V / 33.6~62.4V	24V, 0~12.5A	150mV	91.5%
RSD-300C-48	28.8~67.2V / 33.6~62.4V	48V, 0~6.3A	180mV	92.0%
RSD-300D-5	57.6~154V / 67.2~143V	5V, 0~42A	100mV	90.0%
RSD-300D-12	57.6~154V / 67.2~143V	12V, 0~25A	120mV	91.5%
RSD-300D-24	57.6~154V / 67.2~143V	24V, 0~12.5A	150mV	91.5%
RSD-300D-48	57.6~154V / 67.2~143V	48V, 0~6.3A	180mV	91.5%
RSD-300E-5	21.6~50.4V / 25.2~46.8V	5V, 0~42A	100mV	88.0%
RSD-300E-12	21.6~50.4V / 25.2~46.8V	12V, 0~25A	120mV	90.0%
RSD-300E-24	21.6~50.4V / 25.2~46.8V	24V, 0~12.5A	150mV	91.0%
RSD-300E-48	21.6~50.4V / 25.2~46.8V	48V, 0~6.3A	180mV	91.0%
RSD-300F-5	43.2~100.8V / 50.4~93.6V	5V, 0~42A	100mV	89.0%
RSD-300F-12	43.2~100.8V / 50.4~93.6V	12V, 0~25A	120mV	91.0%
RSD-300F-24	43.2~100.8V / 50.4~93.6V	24V, 0~12.5A	150mV	91.0%
RSD-300F-48	43.2~100.8V / 50.4~93.6V	48V, 0~6.3A	180mV	91.5%

Other Power Solutions

LED Power Family

■ Outdoor Lighting
- 40~600W
- HLG, HVG, CLG series, etc.

■ Indoor Lighting
- 8~150W
- AP, LP, NPF, PLM, HLP, GSC*, OWA* series, etc.

* External power supply

■ Intelligent Lighting
- 25~240W
- LCM, ELG, WPD series, etc.

■ Bay Lighting
- 60~240W
- HBG series

■ Strip Lighting
- 40~120W
- PWM series

► Please contact with our sales representative for new LED catalog or visit our website: www.meanwell.com/product/led/led.html

Inverter Family

■ *Solar Grid Electrical System*

GSI Series
(3000~5000W)

■ *Off-Grid Electrical System*

TS/TN/ISI Series
(100~3000W)

► Please contact with our sales representative for new inverter catalog or visit our website: www.meanwell.com/product/inverter/inverter01.html

Case Drawing

901

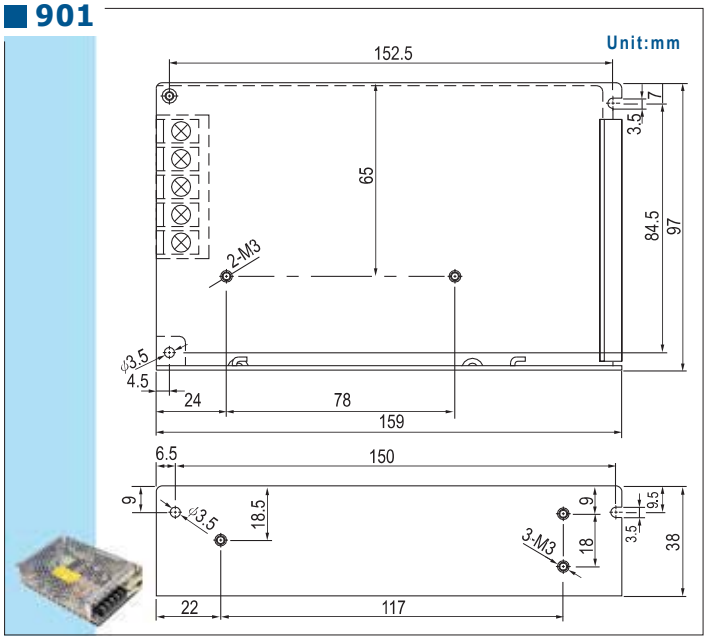

905

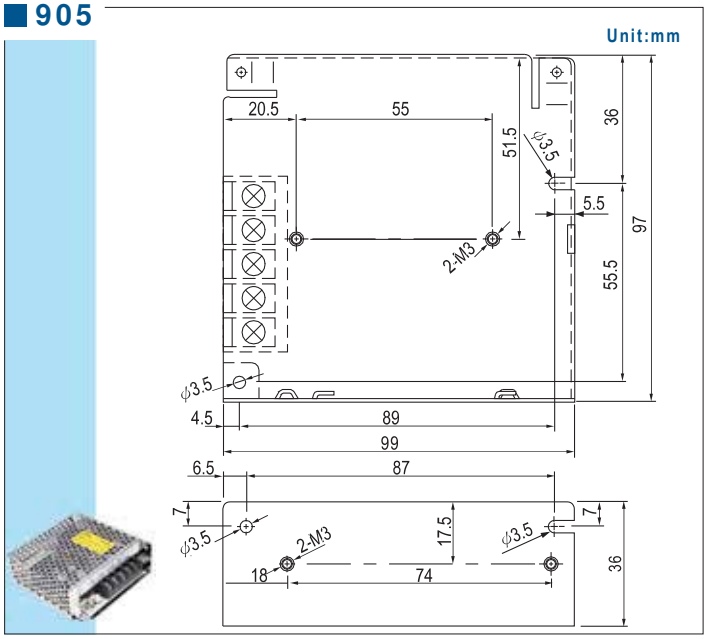

902

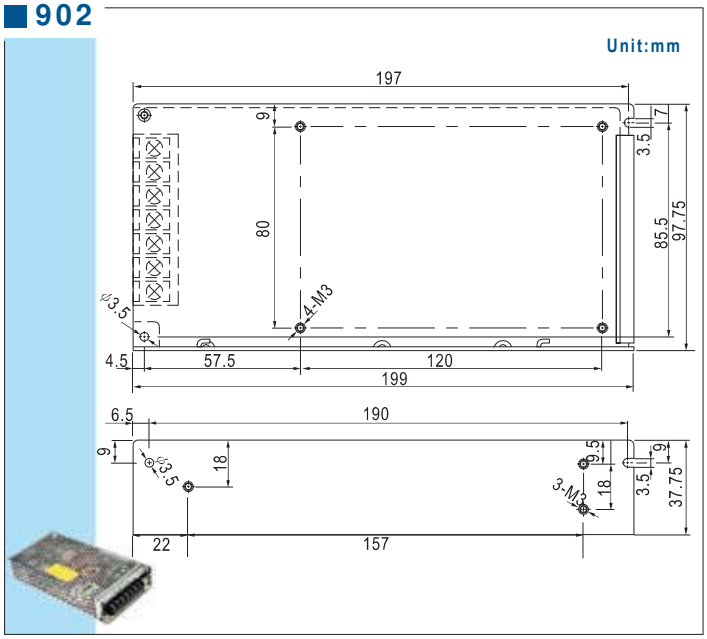

906

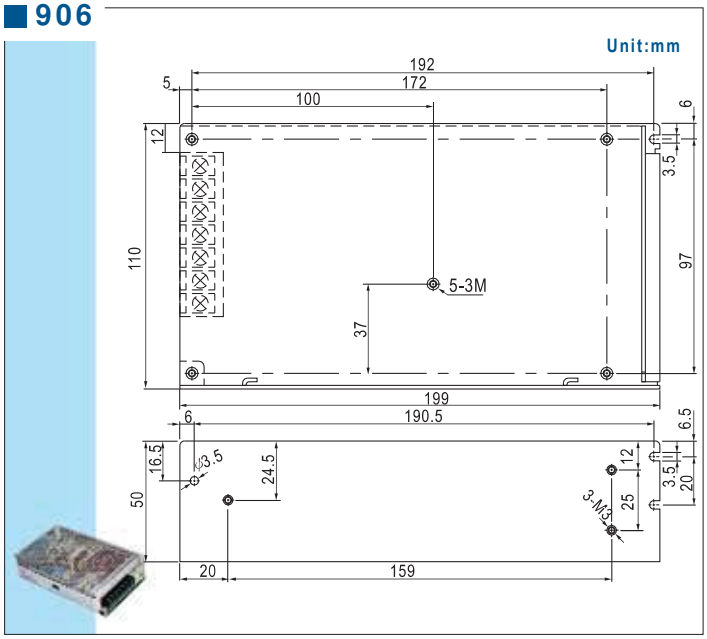

903

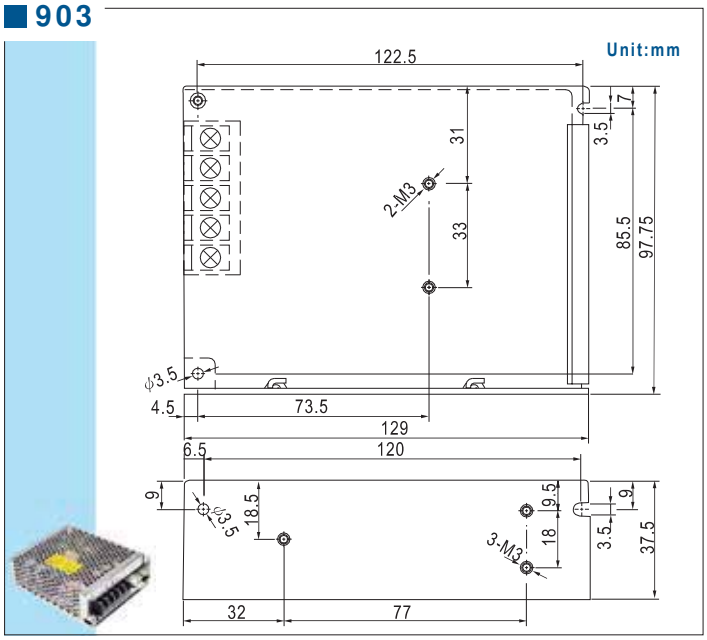

907

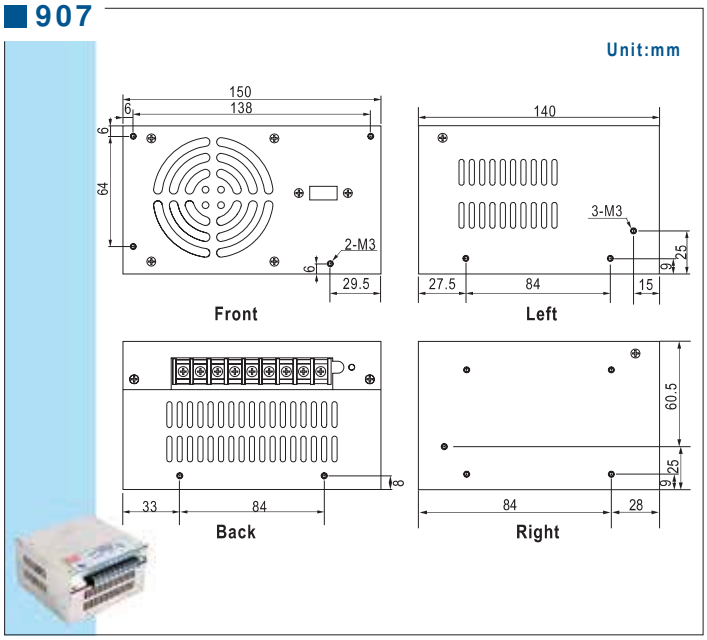

Case Drawing

910A

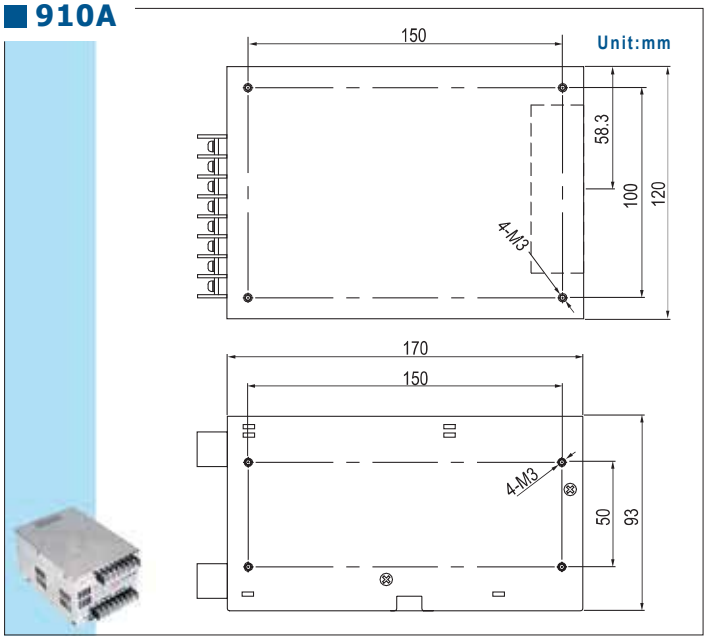

916A
916B

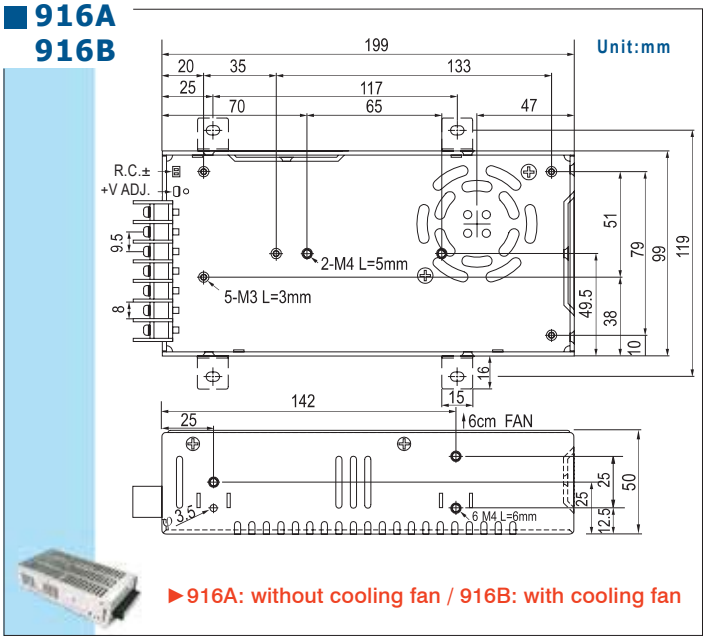

▶916A: without cooling fan / 916B: with cooling fan

912

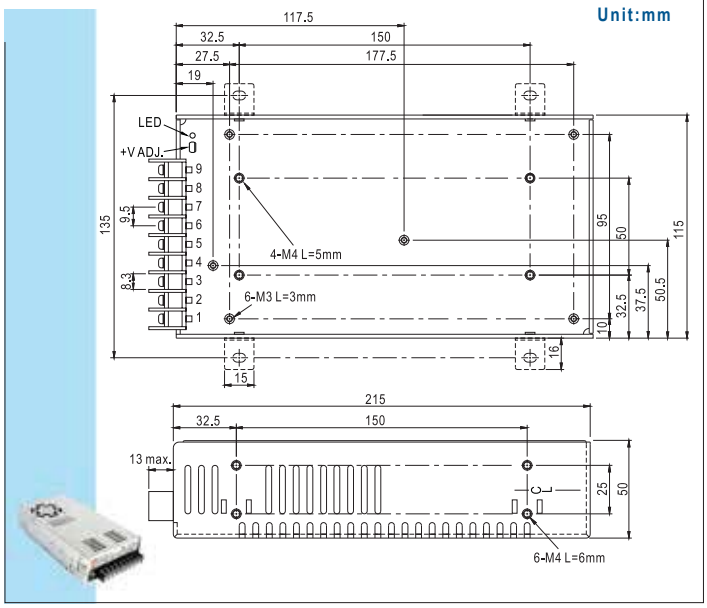

920A

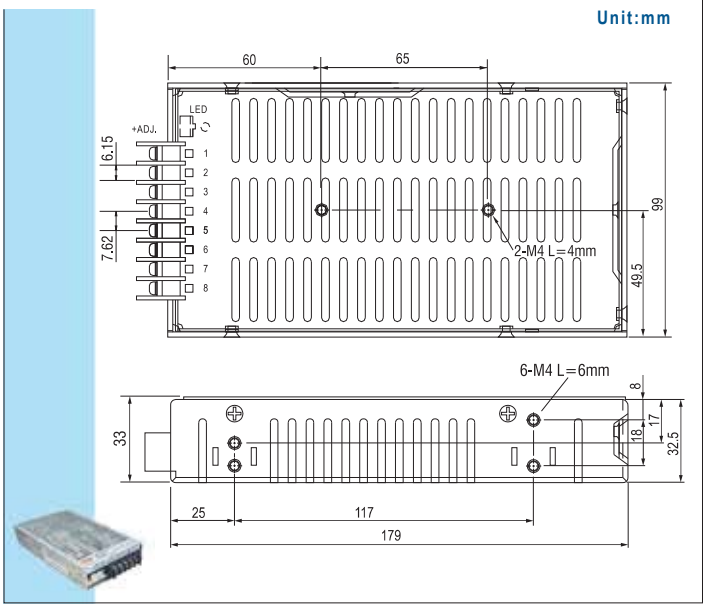

915A

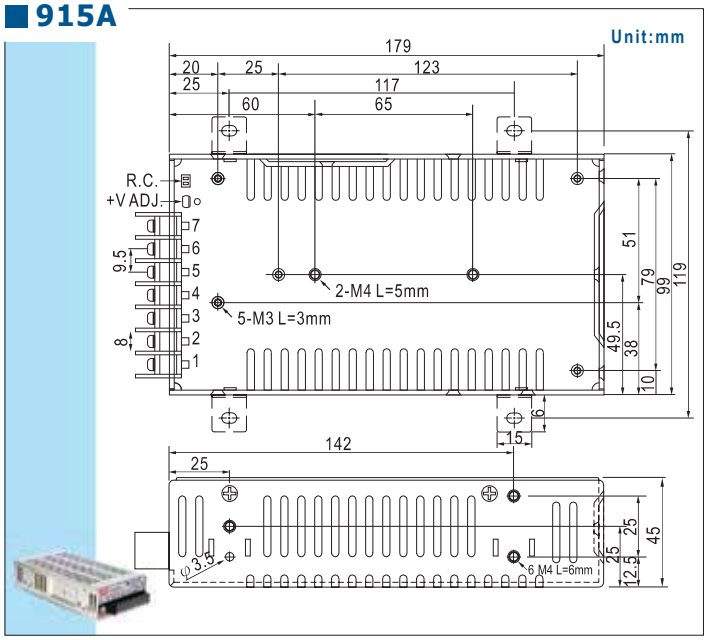

926A

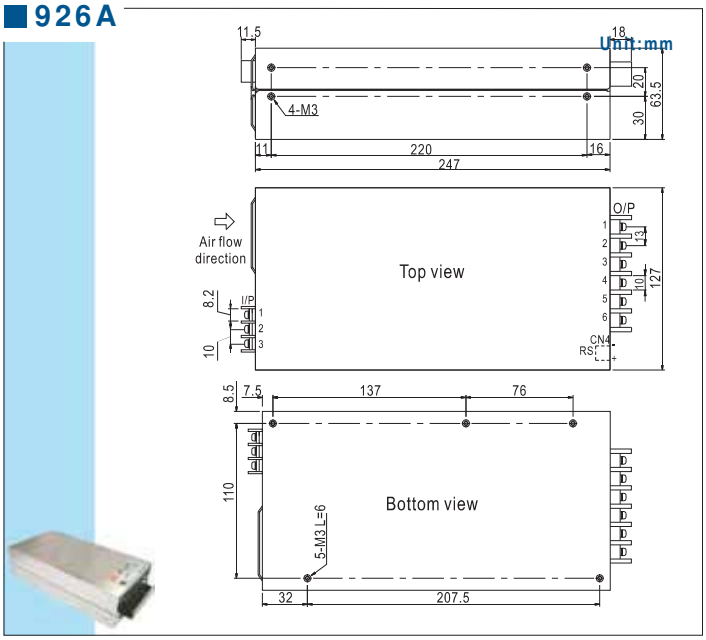

Case Drawing

928A

Unit:mm

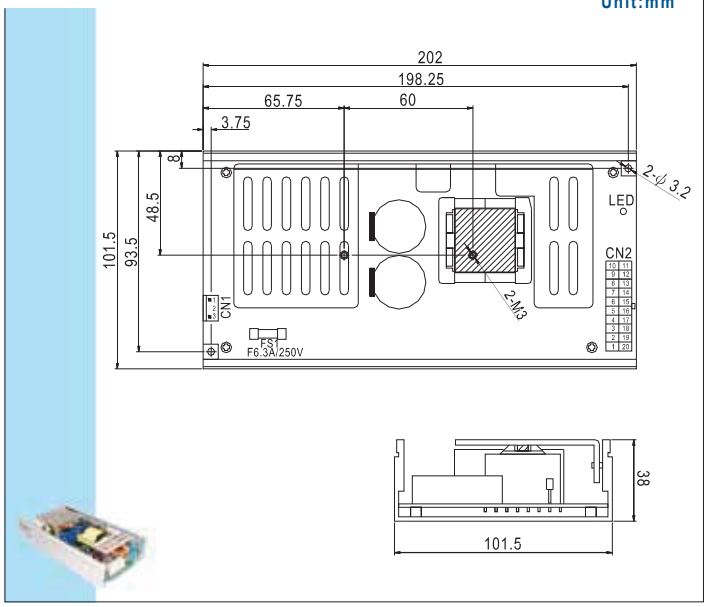

932A

Unit:mm

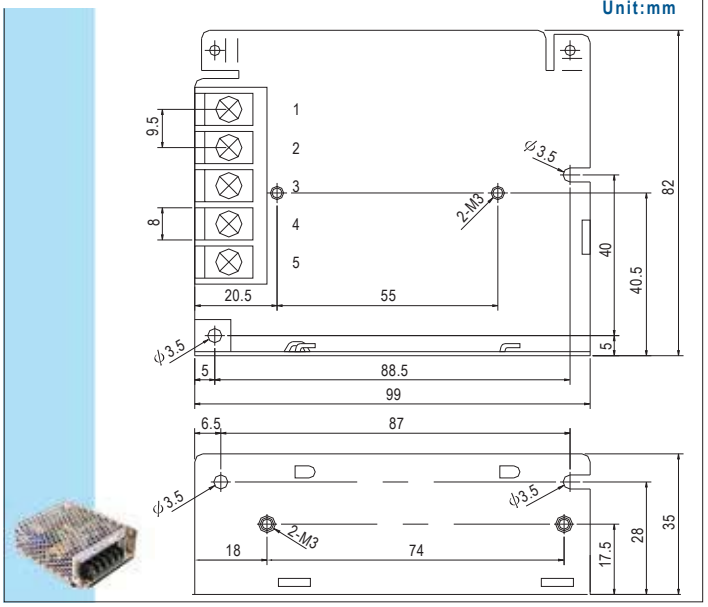

929A

Unit:mm

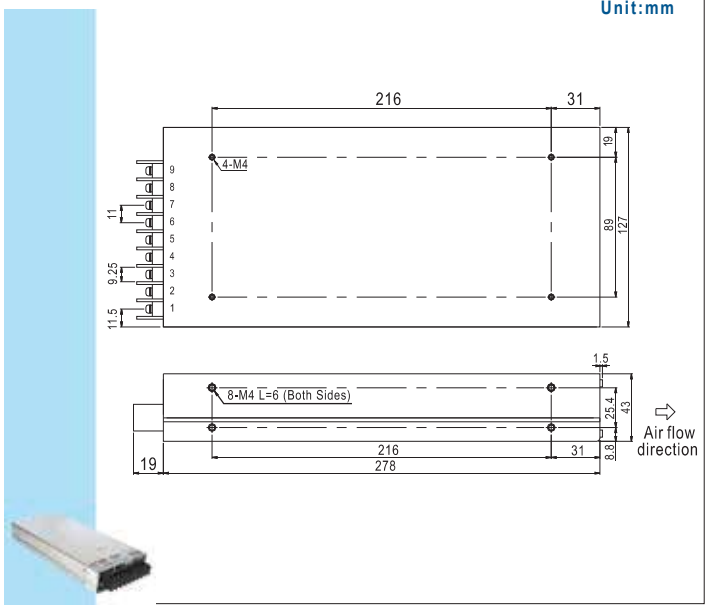

935A

Unit:mm

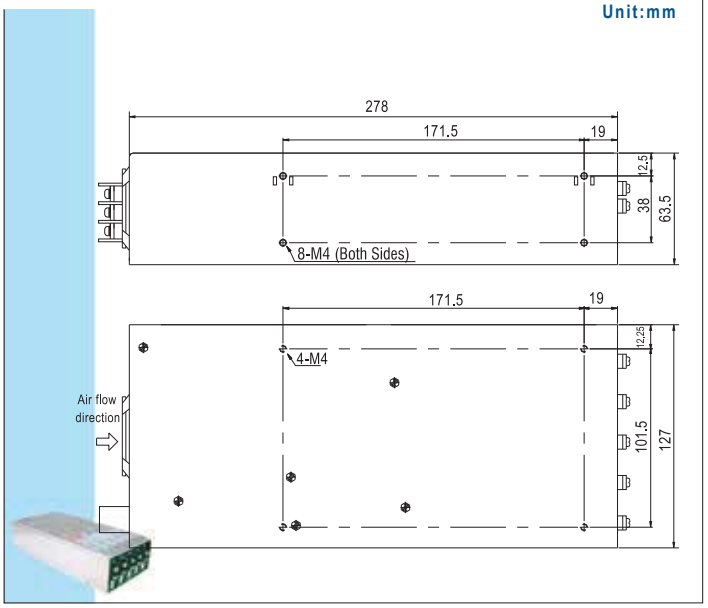

931A

Unit:mm

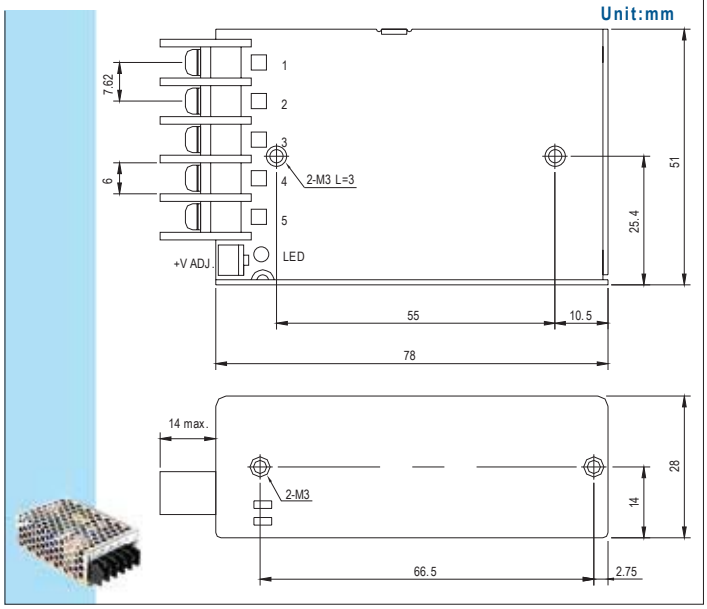

939A

Unit:mm

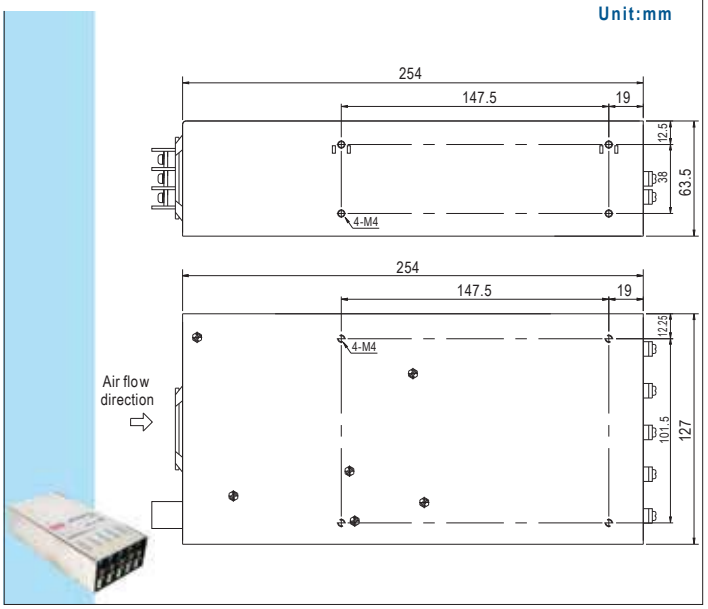

Case Drawing

940A

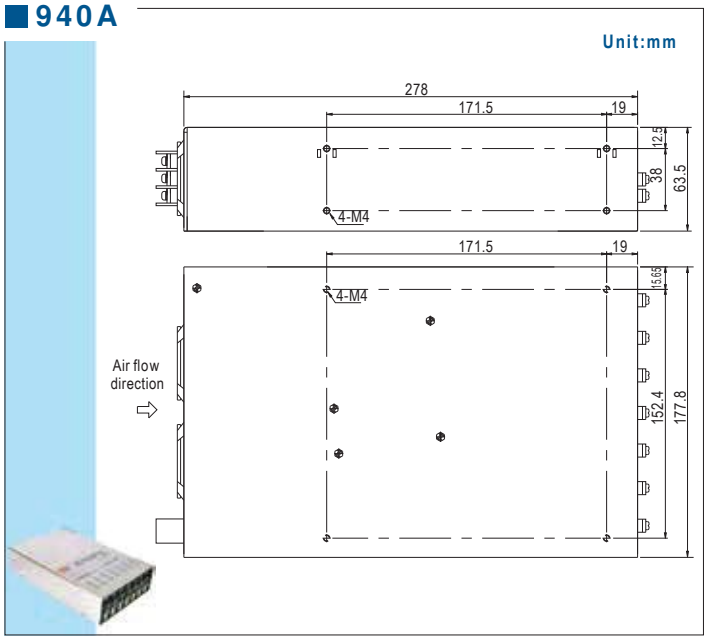

946A

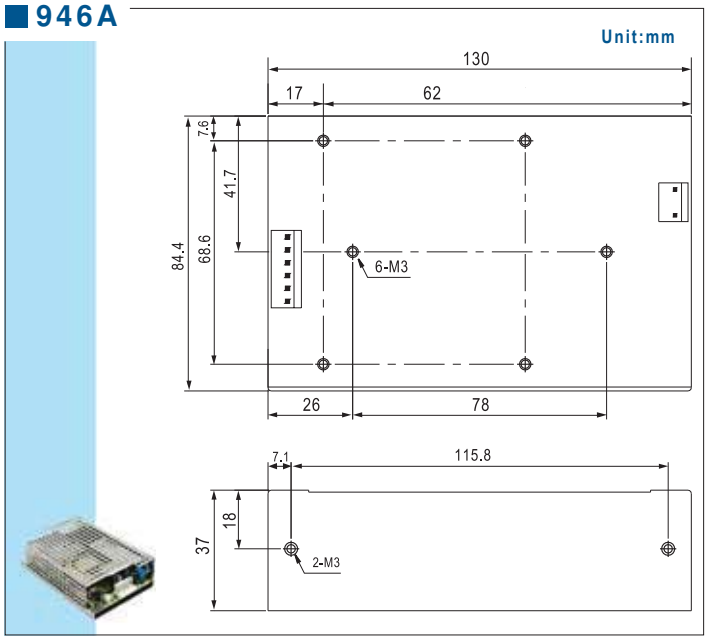

941B

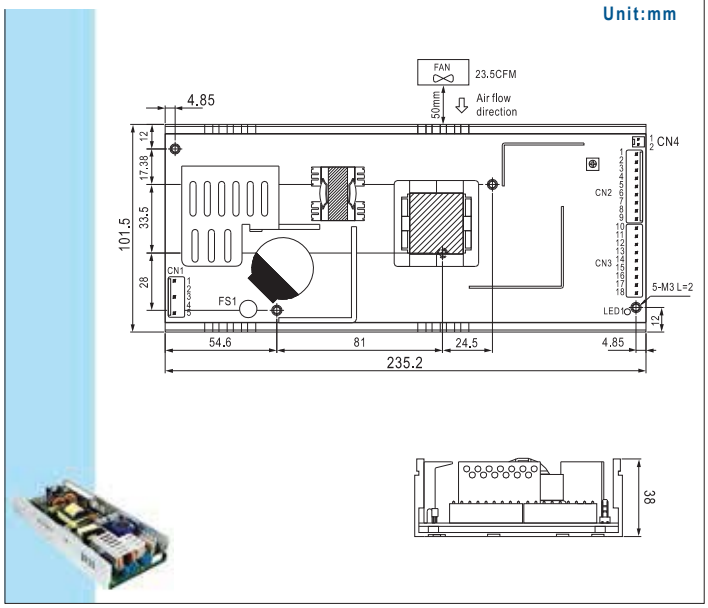

952B

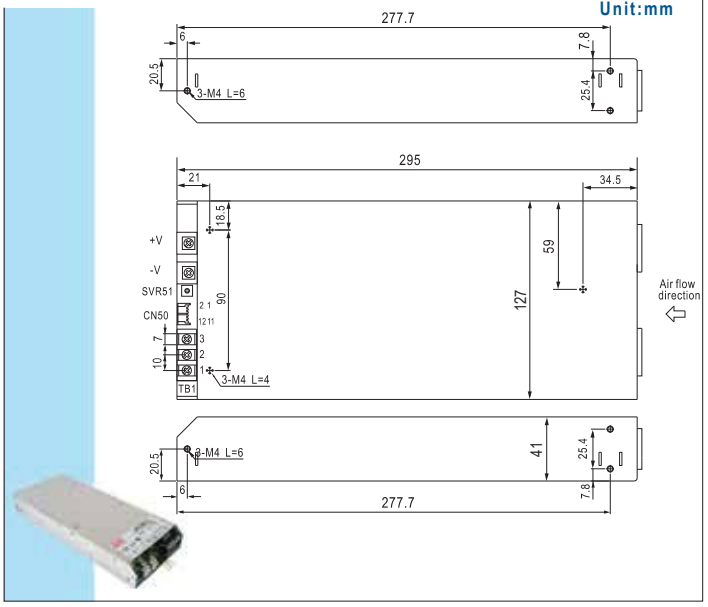

943A

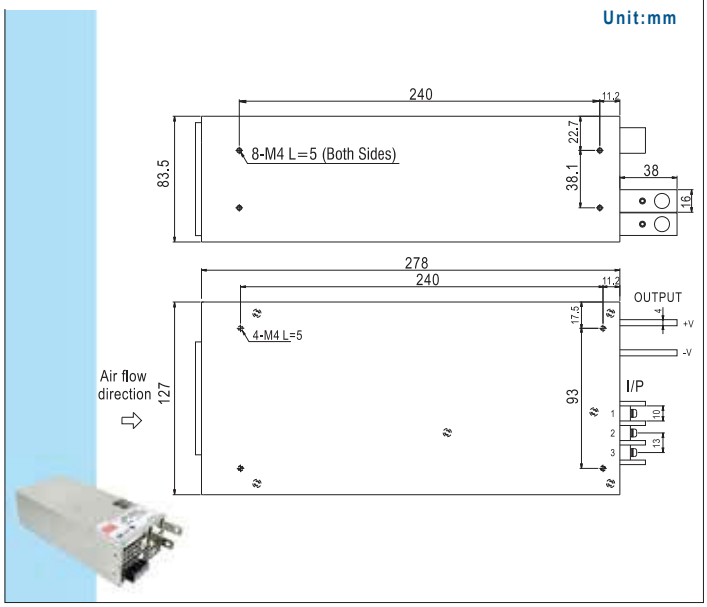

971A

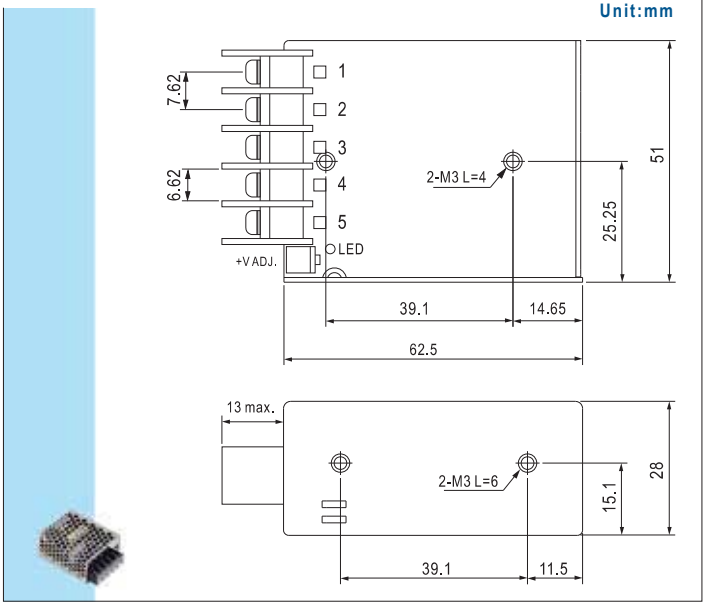

Case Drawing

977A

Unit:mm

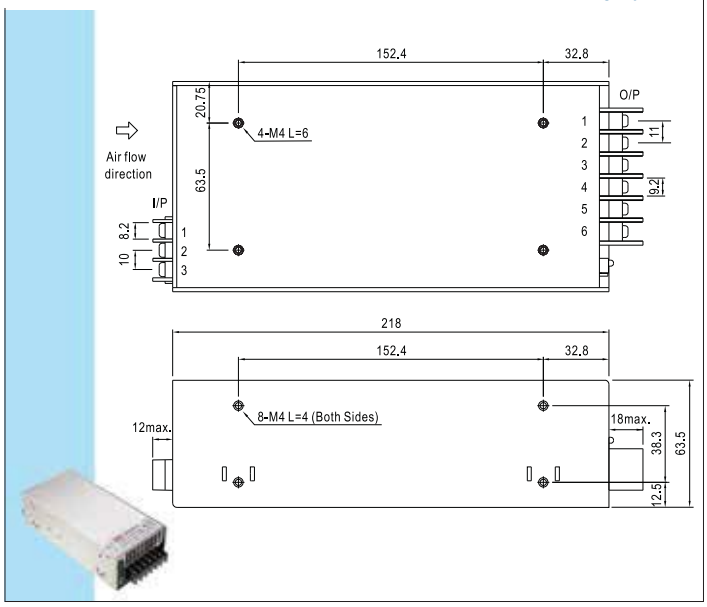

986A

Unit:mm

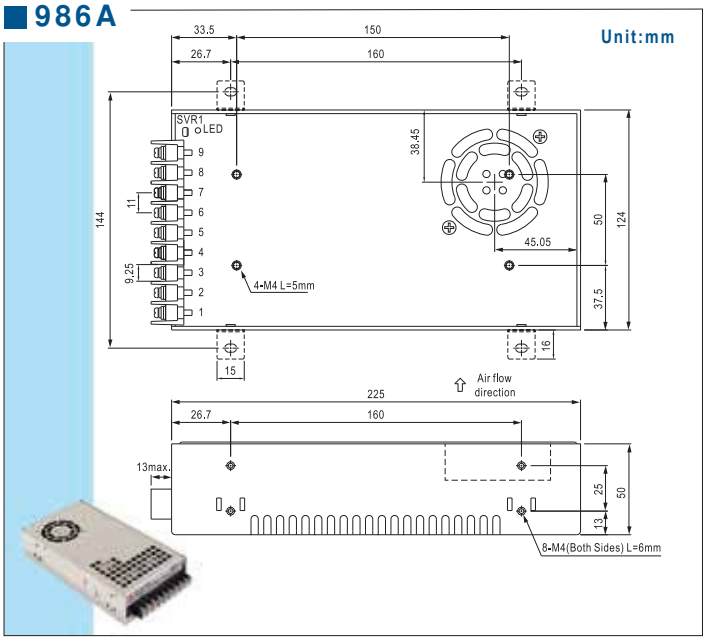

978A

Unit:mm

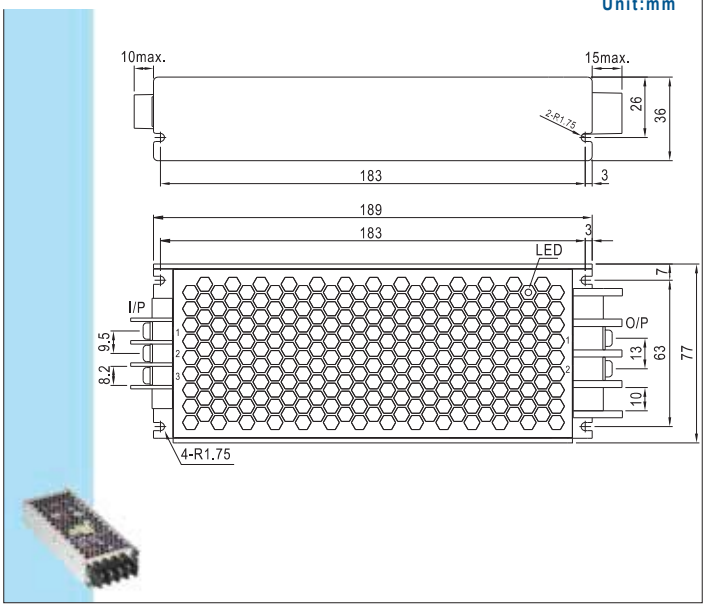

987A

Unit:mm

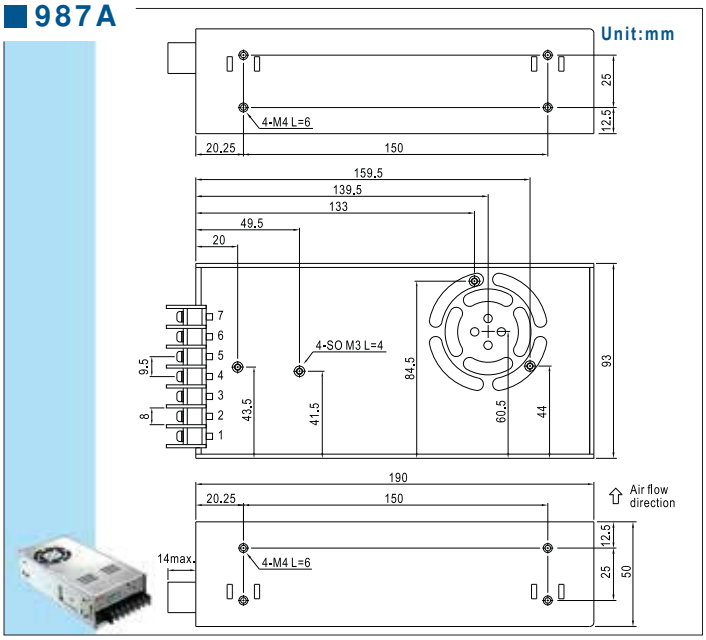

980A

Unit:mm

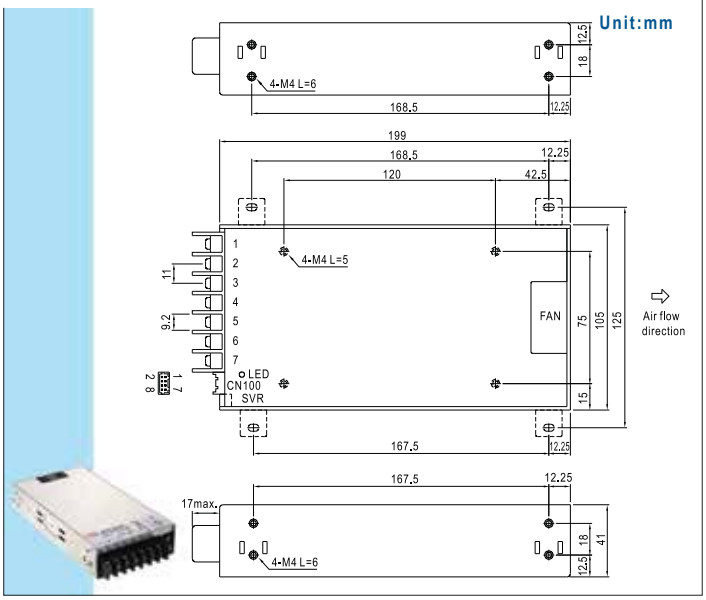

995A

Unit:mm

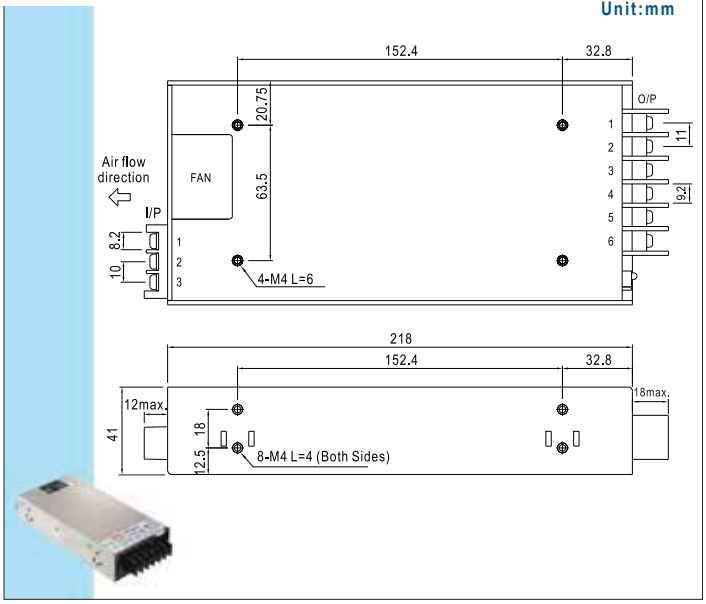

Case Drawing

206A

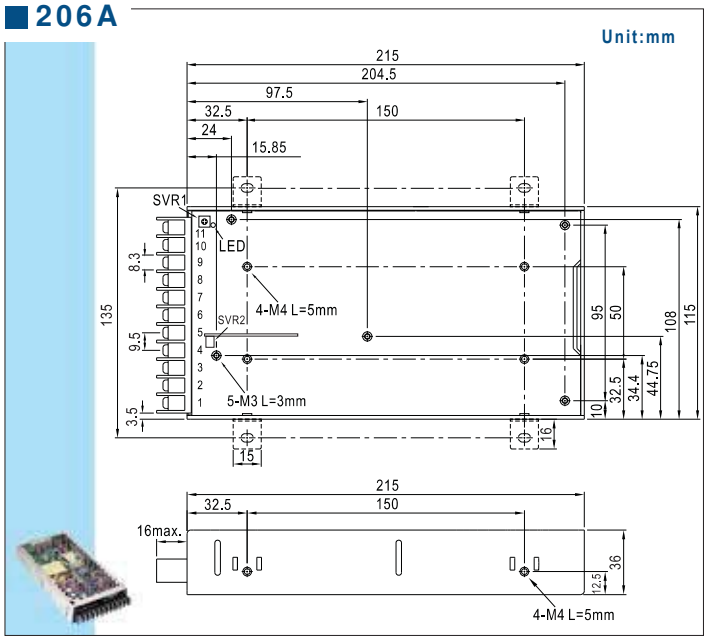

239A

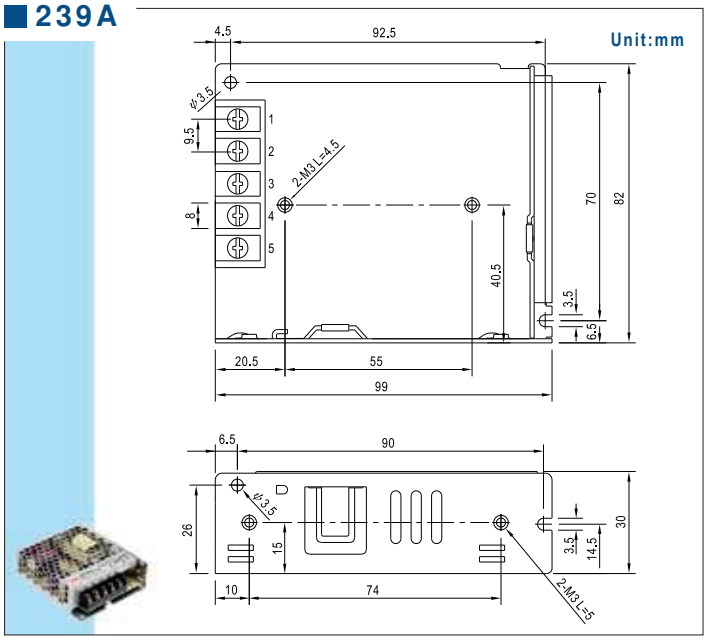

207A

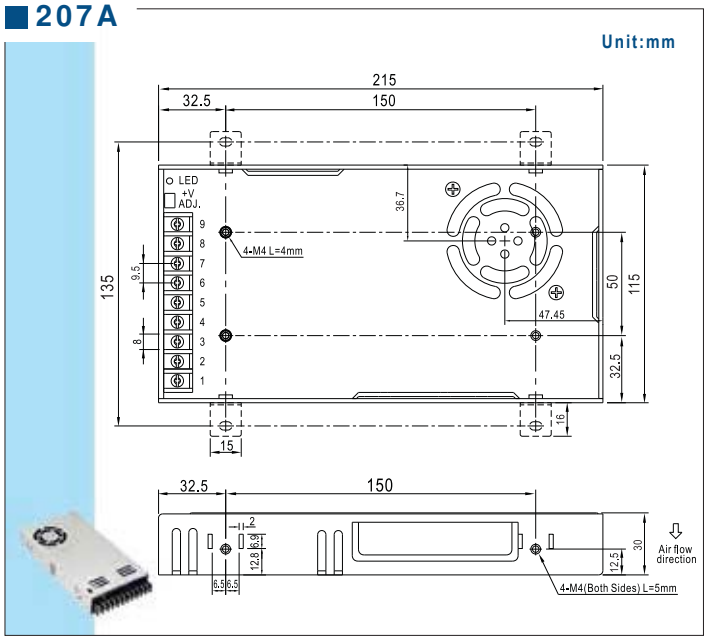

240A

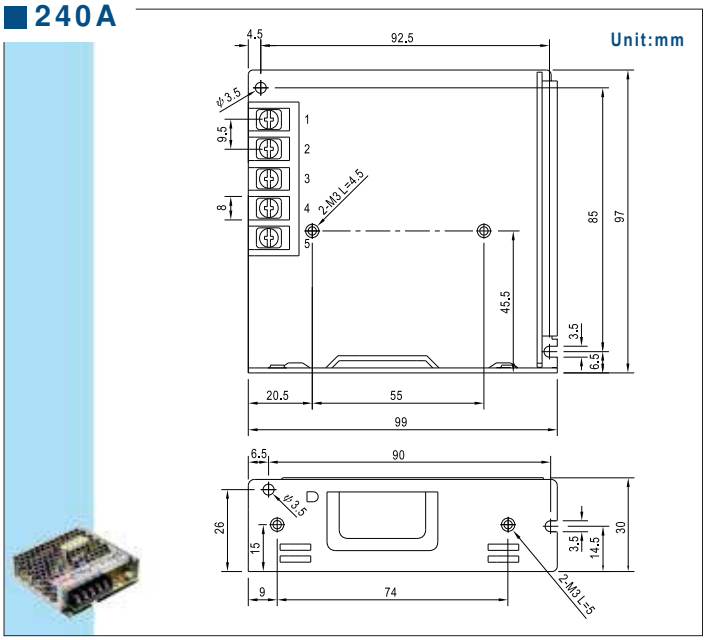

238A

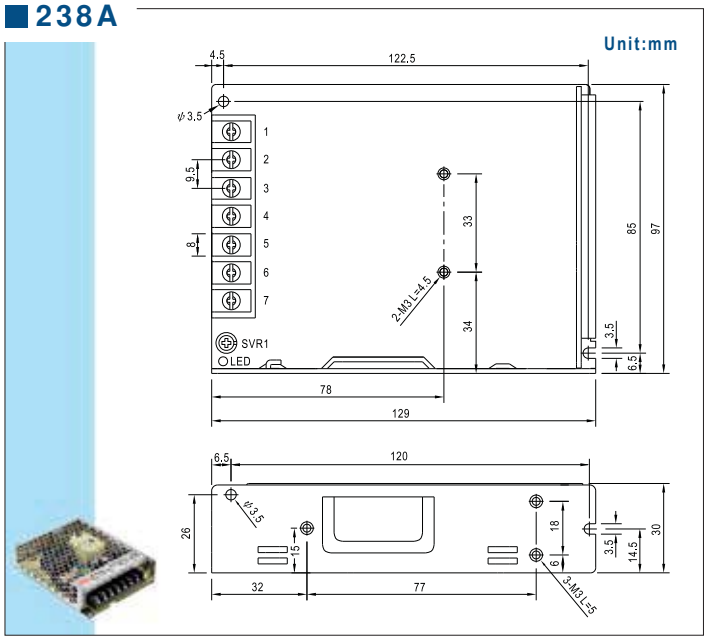

241A

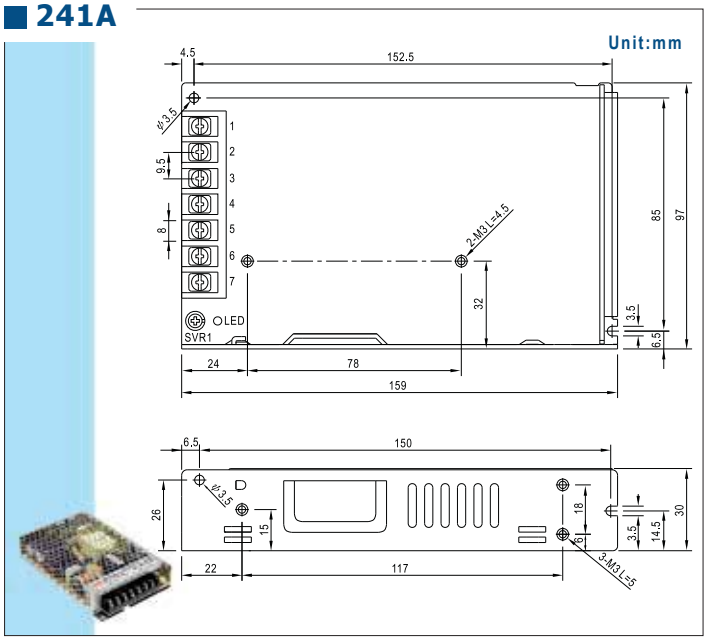

Accessories

DIN Rail Accessories

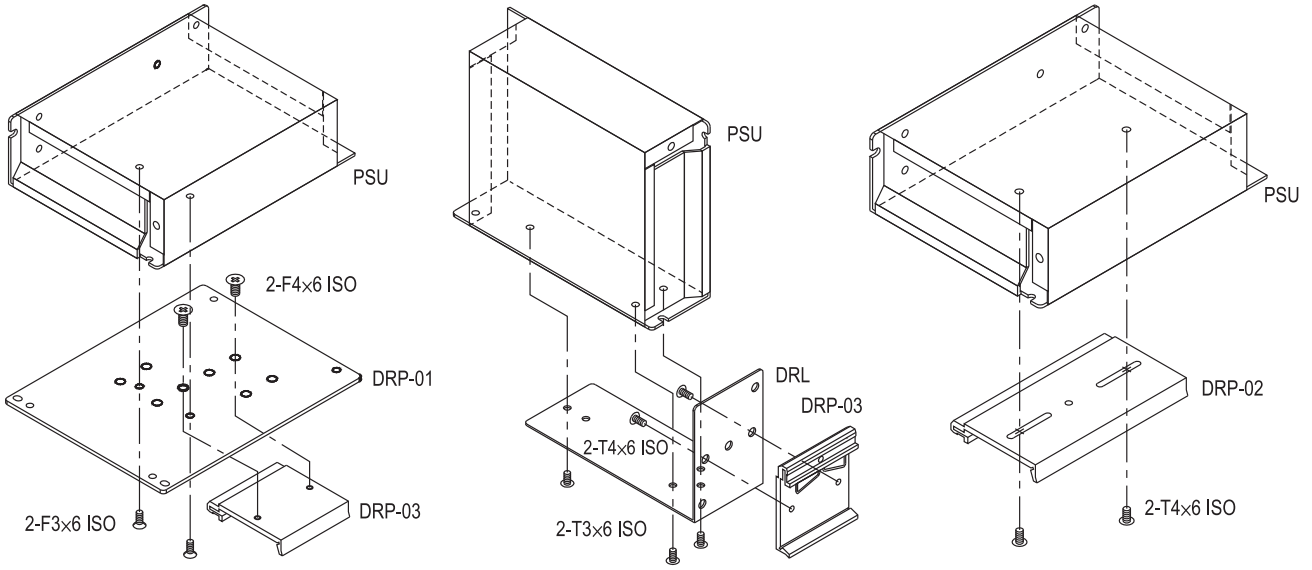

Mounting Accessories

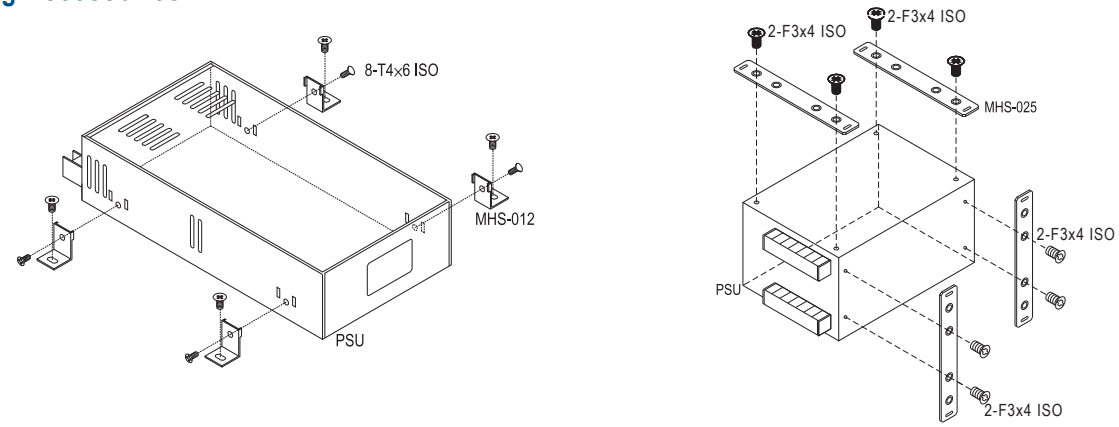

ITEM	Order No.	Case	Model
	DRL-01	238, 239, 240 903 905 931 932 971	LRS-35/50/75/100 S-40, D-30, T-30, ... S-15, S-25, ... RS-25, NES-15 RS-35, NES-25 RS-15
	DRL-02	241 901 902 906 915 916 920	LRS-150/150F S-50, S-60, D-60, ... S-100, S-100F, SD-100, ... S-150, SD-150, D-120, ... SP-100, ... SP-150, SP-200, ... SP-75, ...
	DRL-03A	980 987	SP-240, HRP(G)-300
	DRP-01	238, 239, 241 901, 902 903, 906 931, 932, 946	LRS-35/50/100/150/150F All models
	DRP-01A	203 205 978 999	RSD-100 / 150 / 200 / 300
	DRP-02	240 905 / 915 916 / 920 928	LRS-75 S-15, S-25, ... / SP-100, ... SP-150, SP-200, .. / SP-75, ... USP-225, ...
	DRP-03	DRP-01 DRL-01~03	All models
	DRP-04	203 205 978 999	RSD-100 / 150 / 200 / 300

ITEM	Order No.	Case	Model
	MHS012	206, 207 215A 912, 915 916, 935 939, 940 977, 980 982, 986 987, 995	HDP-190, RSP-200/320,LRS-200/350 RSP-150 S-201, S-320, S-350, SP-100, SP-150, SP-200,SP-320, SE-450/1000, MP450/650/1000, SP-240, HRP-300/450/600, RSP-2400/3000
	MHS013	919 926	PSP-500, SP-750, SE-600
	MHS014	212 952	RSP-750 RSP-1000, SD-1000
	MHS025	910	SP-500, PSP-600.....
	MHS026	943	RSP-1500
	MHS027	971 931	RS-15 RS-25
 TBC is the cover for terminal block	TBC-05	901 903 905 932 220 239A 240A	SD-50, S-60 S-40, NES-50, RS-75 S-25, SD-25, NES-35, RS-50 NES-25, RS-35 RSP-75 LRS-35/50 LRS-75
	TBC-07	901 902 903 905 906 215A 227A 238A 241A	D/ID-60, NED/T-75, RD-85, NES-100, RS-100, T-60 S-100F, RD-125, NES-150, RS-150, SD-100, NED/T-50, RD/RID-65, T-40 NED/T-35,RD-50 S-150, SC-150, SD-150 RSP-150 RSP-100 LRS-100 LRS-150, LRS-150F
	TBC-08	901 906	AD-155, ADD/ADS-155 D/T/Q-120
	TBC-09	207	RSP-200/320, LRS-200/350

General Information

Quotation

- Most of our standard products are available and in stock through our global authorized distributors. Please contact your local distributor for prompt service. Please let us know if you are unable to find Mean Well's distributor information in your local area.
- Written quotations are valid for 60 days from the date quoted unless otherwise specified. Customers are responsible for all banking related charges outside of Taiwan.

Order

- Orders must be placed to Mean Well by mail, e-mail, or fax. Please do not place your order by phone. For international business, Mean Well will provide order confirmations with scheduled delivery dates. If you fail to receive an order confirmation within 2 working days, please reconfirm your order.
- Minimum order amounts per shipment are determined by our local distributor's stock capability. Please contact our sales representative for details.
- We encourage customers to place long-term orders. However, order cancellations or reschedules must be made 45 days prior to the scheduled shipping date.

Delivery

- For our standard products, Mean Well usually keeps around 2-8 weeks safety stock (based on the past 3 months sales record) for prompt delivery of small / medium quantity orders. For large quantity or new product orders, 3-5 weeks lead-time is needed.

Return

- All returned goods must have a RMA (return material authorization) number marked on each carton. Contact Mean Well for a RMA number. All goods must be shipped as "freight prepaid" unless otherwise confirmed by our sales representatives.

Warranty

- Products found to be defective within 30 days from the date of receipt can be returned for credit or exchange. After the initial 30 days, Mean Well will repair the goods according to our warranty period. Contact Mean Well for further information on credit or a RMA number. Goods should be shipped as "freight prepaid" to Mean Well and Mean Well will repair and return the defective units (freight prepaid) within 7 working days. If the warranty period has expired, a repair fee (depends on the condition of the product) will be charged.
- If customers do the repair by themselves, Mean Well can provide reasonable quantity of free components for repair purpose.
- Apart from the external type power supply, the power supply is in general one component of the final system; particularly, the compatibility between the power supply and the system is closely associated. Should you have any difficulty in normally operating the power supplies, please contact our sales representatives and figure out the root cause. If the problem results from the power supply, the warranty right will be applied; if any issues arise from inappropriate installation or incompatibility between the power supply and the system, MEAN WELL will reserve the right to fulfill the warranty .

Attention

- We make every effort to ensure the accuracy of information in the catalog. If there is any discrepancy between the data presented in our catalog and the SPEC, the SPEC sheets should take precedence (please refer to www.meanwell.com for the latest SPEC information). We cannot take any responsibility of any consequence arising due to error or change in specification. We suggest customers conduct a sample test for evaluation and approval before placing a formal order.
- For continuing product improvement, Mean Well reserves the right to revise any information in this catalog without further notification.

The EMC directive applies to component power supplies

- Mean Well ensures that all of the power supplies with CE declaration are designed to meet EMC directives and are verified by an independent certified lab agent with a test report prepared. However, there are 2 categories for power supplies: One is a stand-alone power supply, such as laboratory power supplies which can be tested under EMC individually. The other category is a component power supply such as an enclosed power supply and open PCB power supply. These power supplies are considered a component which will be installed into a final equipment. Since EMC performance is affected by the final installation of a product, Mean Well cannot guarantee that the final equipment will meet EMC directives. Final product manufacturers must re-confirm that their product meets EMC directives.

Taiwan

明緯企業股份有限公司

MEAN WELL ENTERPRISES CO., LTD.

24891 新北市五股區五權三路28號

No.28, Wuquan 3rd Rd., Wugu Dist.,

New Taipei City 24891, Taiwan (R.O.C.)

統一編號：34491075

Tel :+886-2-2299-6100(rep.)

Fax:+886-2-2299-6200(rep.)

+886-2-2298-0818(sales)

E-mail:info@meanwell.com

http://www.meanwell.com

China

明緯(廣州)電子有限公司

MEAN WELL (GUANGZHOU) ELECTRONICS CO., LTD.

廣州市天河區東圃鎮黃村粵安工業園A棟2樓

2F, A Building, Yuean Industry Park,

Huangcun, Dongpu Town, Tianhe District,

Guangzhou, China

Post Code: 510660

Tel :+86-20-2887-1200(rep.) 400-800-3608(sales)

Fax:+86-20-8201-0507

E-mail:info@meanwell.com.cn

http://www.meanwell.com.cn

蘇州明緯科技有限公司

SUZHOU MEAN WELL TECHNOLOGY CO., LTD.

江蘇省蘇州市相城區黃埭鎮潘陽工業園東橋健民路77號

No.77, Jian-Ming Rd. Dong-Qiao, Pan-Yang Ind. Park,

Huang-Dai Town, Xiang-Cheng District, Suzhou,

Jiang-Su, China

Post Code: 215152

Tel :+86-512-6508-8600

Fax:+86-512-6508-8700

E-mail:info@meanwell.cc

http://www.meanwell.cc

U.S.A.

MEAN WELL USA, INC.

44030 Fremont Blvd., Fremont, CA 94538, U.S.A.

Tel :+1-510-683-8886 Fax:+1-510-683-8899

E-mail:info@meanwellusa.com

http://www.meanwellusa.com

Europe

MEAN WELL EUROPE B.V.

Langs de Werf 8, 1185XT Amstelveen, The Netherlands

Tel :+31-20-758-6000 Fax:+31-20-758-6001

E-mail:info@meanwell.eu

http://www.meanwell.eu

Please Contact Your Local Distributor

PRINTED WITH SOY INK

This catalog is printed with soy ink