EN: This Datasheet/Document is presented by the manufacturer.

Please visit our website for pricing and availability at www.hestore.hu.

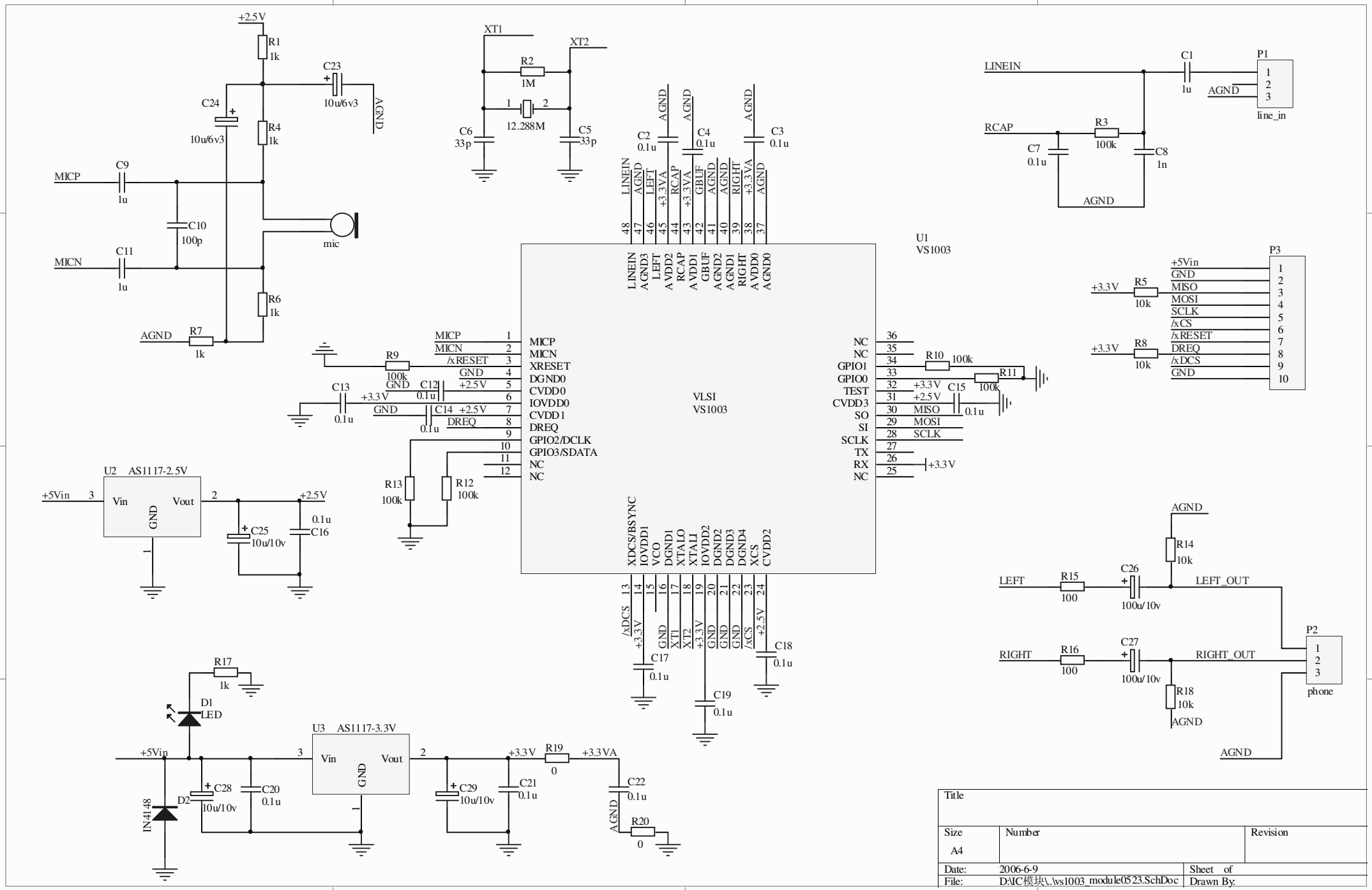
+2.5V
R1 1k
C23 10u/6v3
AGND
C24 10u/6v3
R4 1k
MICP
C9 1u
C10 100p
MICN
C11 1u
mic
R6 1k
AGND
R7 1k
XT1
XT2
R2 1M
12.288M
C6 33p
C5 33p
C2 0.1u
C4 0.1u
C3 0.1u
LINEIN
RCAP
C1 1u
P1
line_in
R3 100k
C7 0.1u
C8 1n
U1
VS1003
VLSI
VS1003
P3
+5Vin
GND
MISO
MOSI
SCLK
/xCS
/xRESET
DREQ
/xDCS
+3.3V
R5 10k
R8 10k
R9 100k
C13 0.1u
C12 0.1u
C14 0.1u
R10 100k
R11 100k
C15 0.1u
R13 100k
R12 100k
U2 AS1117-2.5V
Vin
Vout
C25 10u/10v
C16 0.1u
R14 10k
LEFT
R15 100
C26 100u/10v
LEFT_OUT
RIGHT
R16 100
C27 100u/10v
RIGHT_OUT
R18 10k
P2
phone
R17 1k
D1 LED
U3 AS1117-3.3V
+5Vin
D2 IN4148
C28 10u/10v
C20 0.1u
C29 10u/10v
C21 0.1u
R19 0
+3.3VA
C22 0.1u
R20 0
C17 0.1u
C18 0.1u
C19 0.1u
Title
Size A4
Number
Revision
Date: 2006-6-9
Sheet of
File: D:\IC模块\..\vs1003_module0523.SchDoc
Drawn By: