EN: This Datasheet/Document is presented by the manufacturer.

Please visit our website for pricing and availability at www.hestore.hu.

MC34152, MC33152, NCV33152

High Speed Dual MOSFET Drivers

The MC34152/MC33152 are dual noninverting high speed drivers specifically designed for applications that require low current digital signals to drive large capacitive loads with high slew rates. These devices feature low input current making them CMOS/LSTTL logic compatible, input hysteresis for fast output switching that is independent of input transition time, and two high current totem pole outputs ideally suited for driving power MOSFETs. Also included is an undervoltage lockout with hysteresis to prevent system erratic operation at low supply voltages.

Typical applications include switching power supplies, dc−to−dc converters, capacitor charge pump voltage doublers/inverters, and motor controllers.

This device is available in dual−in−line and surface mount packages.

Features

- Two Independent Channels with 1.5 A Totem Pole Outputs
- Output Rise and Fall Times of 15 ns with 1000 pF Load
- CMOS/LSTTL Compatible Inputs with Hysteresis
- Undervoltage Lockout with Hysteresis
- Low Standby Current
- Efficient High Frequency Operation
- Enhanced System Performance with Common Switching Regulator Control ICs
- NCV Prefix for Automotive and Other Applications Requiring Site and Change Controls
- These are Pb−Free and Halide−Free Devices

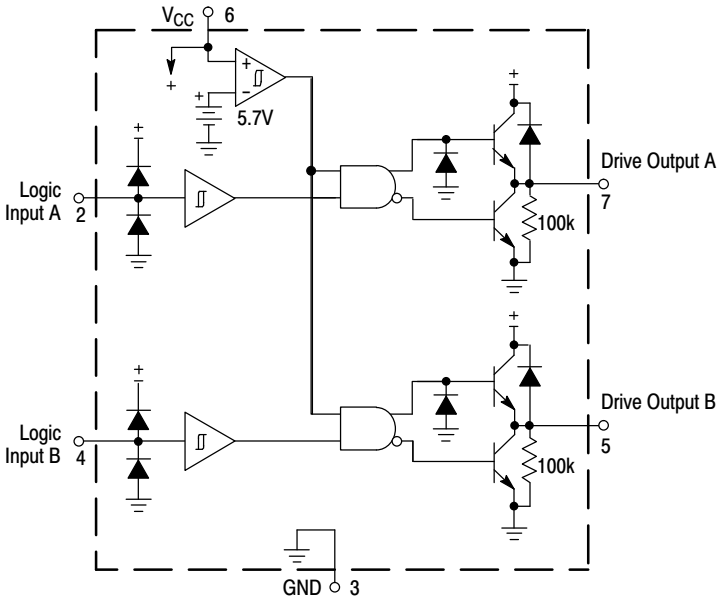

Figure 1. Representative Diagram

ON Semiconductor®

http://onsemi.com

MARKING DIAGRAMS

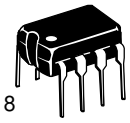

PDIP−8
P SUFFIX
CASE 626

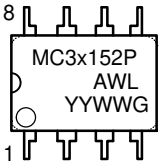



SOIC−8
D SUFFIX
CASE 751

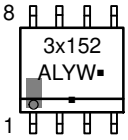

x	= 3 or 4
A	= Assembly Location
WL, L	= Wafer Lot
YY, Y	= Year
WW, W	= Work Week
G or ▪	= Pb−Free Package

(Note: Microdot may be in either location)

PIN CONNECTIONS

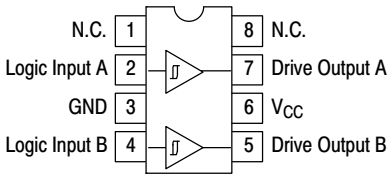

(Top View)

ORDERING INFORMATION

See detailed ordering and shipping information in the package dimensions section on page 10 of this data sheet.

© Semiconductor Components Industries, LLC, 2014

MAXIMUM RATINGS

Rating	Symbol	Value	Unit
Power Supply Voltage	V_{CC}	20	V
Logic Inputs (Note 1)	V_{in}	–0.3 to +V_{CC}	V
Drive Outputs (Note 2) Totem Pole Sink or Source Current Diode Clamp Current (Drive Output to V_{CC})	 I_O $I_{O(clamp)}$	 1.5 1.0	A
Power Dissipation and Thermal Characteristics D Suffix, Plastic Package Case 751 Maximum Power Dissipation @ T_A = 50°C Thermal Resistance, Junction–to–Air P Suffix, Plastic Package, Case 626 Maximum Power Dissipation @ T_A = 50°C Thermal Resistance, Junction–to–Air	 P_D $R_{\theta JA}$ P_D $R_{\theta JA}$	 0.56 180 1.0 100	 W °C/W W °C/W
Operating Junction Temperature	T_J	+150	°C
Operating Ambient Temperature MC34152 MC33152 MC33152V, NCV33152	T_A	0 to +70 –40 to +85 –40 to +125	°C
Storage Temperature Range	T_{stg}	–65 to +150	°C
Electrostatic Discharge Sensitivity (ESD) (Note 3) Human Body Model (HBM) Machine Model (MM) Charged Device Model (CDM)	ESD	 2000 200 1500	V

Stresses exceeding Maximum Ratings may damage the device. Maximum Ratings are stress ratings only. Functional operation above the Recommended Operating Conditions is not implied. Extended exposure to stresses above the Recommended Operating Conditions may affect device reliability.

1. For optimum switching speed, the maximum input voltage should be limited to 10 V or V_{CC}, whichever is less.
2. Maximum package power dissipation limits must be observed.
3. ESD protection per following tests:
   JEDEC Standard JESD22–A114–F for HBM
   JEDEC Standard JESD22–A115–A for MM
   JEDEC Standard JESD22–C101D for CDM.

ELECTRICAL CHARACTERISTICS (V_{CC} = 12 V, for typical values T_A = 25°C, for min/max values T_A is the operating ambient temperature range that applies [Note 4], unless otherwise noted.)

Characteristics	Symbol	Min	Typ	Max	Unit
LOGIC INPUTS					
Input Threshold Voltage					V
Output Transition High−to−Low State	V_{IH}	–	1.75	2.6	
Output Transition Low−to−High State	V_{IL}	0.8	1.58	–	
Input Current					μA
High State (V_{IH} = 2.6 V)	I_{IH}	–	100	300	
Low State (V_{IL} = 0.8 V)	I_{IL}	–	20	100	
DRIVE OUTPUT					
Output Voltage					V
Low State (I_{sink} = 10 mA)	V_{OL}	–	0.8	1.2	
(I_{sink} = 50 mA)		–	1.1	1.5	
(I_{sink} = 400 mA)		–	1.8	2.5	
High State (I_{source} = 10 mA)	V_{OH}	10.5	11.2	–	
(I_{source} = 50 mA)		10.4	11.1	–	
(I_{source} = 400 mA)		10	10.8	–	
Output Pull−Down Resistor	R_{PD}	–	100	–	kΩ
SWITCHING CHARACTERISTICS (T_A = 25°C)					
Propagation Delay (C_L = 1.0 nF)					ns
Logic Input to: Drive Output Rise (10% Input to 10% Output)	$t_{PLH\ (IN/OUT)}$	–	55	120	
Drive Output Fall (90% Input to 90% Output)	$t_{PHL\ (IN/OUT)}$	–	40	120	
Drive Output Rise Time (10% to 90%) C_L = 1.0 nF	t_r	–	14	30	ns
C_L = 2.5 nF		–	36	–	
Drive Output Fall Time (90% to 10%) C_L = 1.0 nF	t_f	–	15	30	ns
C_L = 2.5 nF		–	32	–	
TOTAL DEVICE					
Power Supply Current	I_{CC}				mA
Standby (Logic Inputs Grounded)		–	6.0	8.0	
Operating (C_L = 1.0 nF Drive Outputs 1 and 2, f = 100 kHz)		–	10.5	15	
Operating Voltage	V_{CC}	6.1	–	18	V
UNDERVOLTAGE LOCKOUT					
Startup Threshold	V_{th}	–	5.8	6.1	V
Minimum Operating Voltage After Turn−On (V_{CC})	$V_{CC(min)}$	–	5.3	–	V

4. Low duty cycle pulse techniques are used during test to maintain junction temperature as close to ambient as possible.
   T_{low} = 0°C for MC34152, −40°C for MC33152, −40°C for MC33152V
   T_{high} = +70°C for MC34152, +85°C for MC33152, +125°C for MC33152V
   NCV33152: T_{low} = −40°C, T_{high} = +125°C. Guaranteed by design.

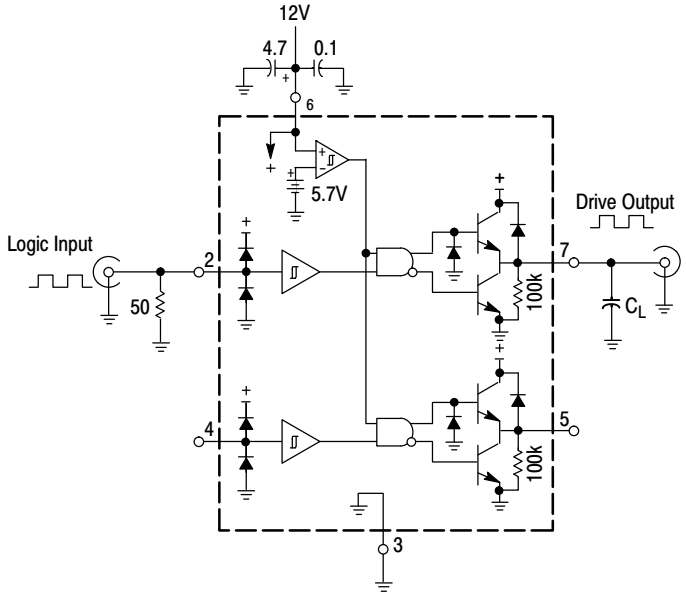

Figure 2. Switching Characteristics Test CIrcuit

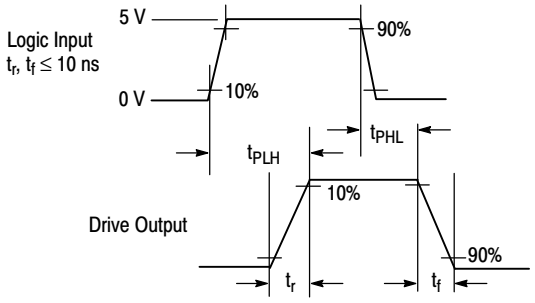

Figure 3. Switching Waveform Definitions

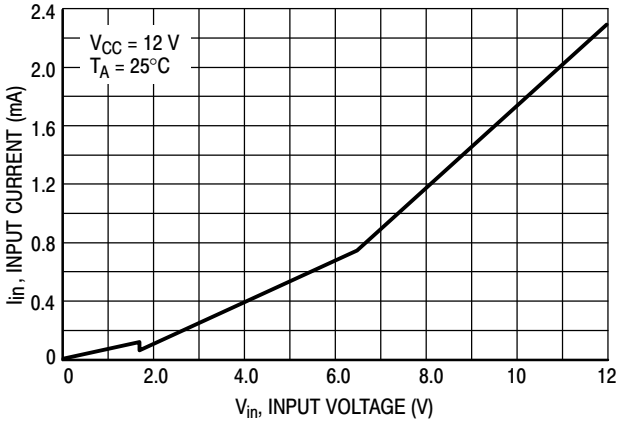

Figure 4. Logic Input Current versus Input Voltage

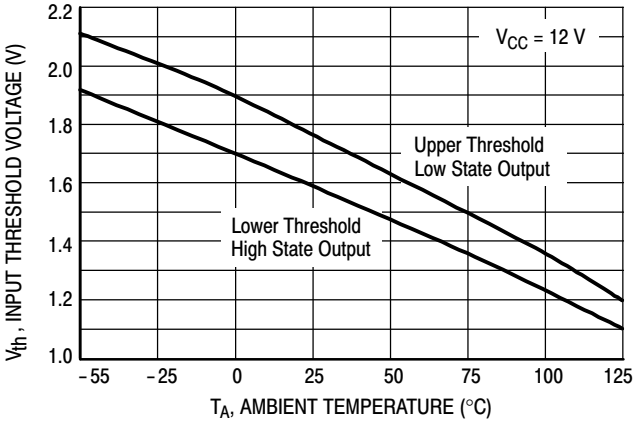

Figure 5. Logic Input Threshold Voltage versus Temperature

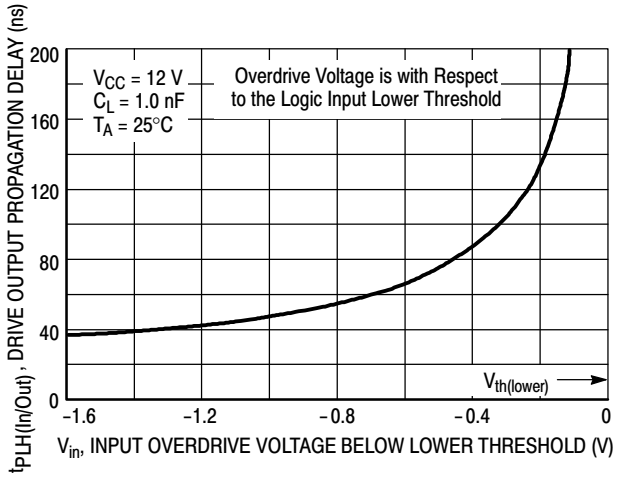

Figure 6. Drive Output High to Low Propagation Delay versus Logic Input Overdrive Voltage

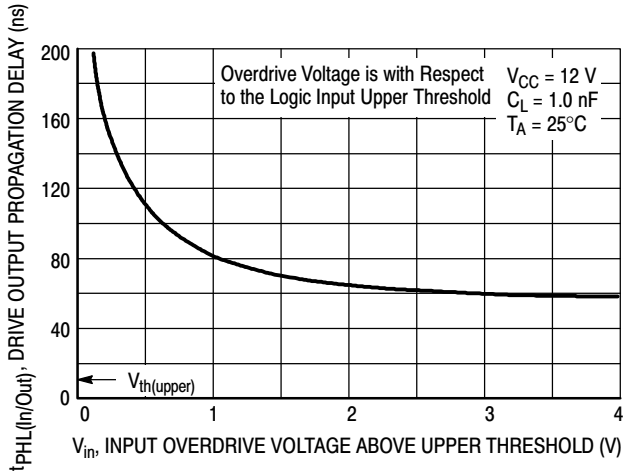

Figure 7. Drive Output Low to High Propagation Delay versus Logic Input Overdrive Voltage

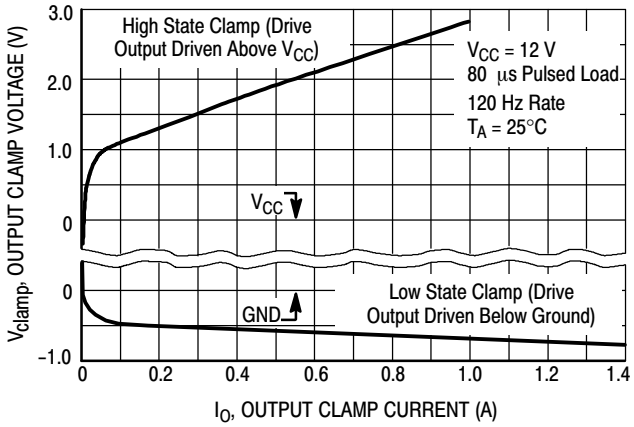

Figure 8. Drive Output Clamp Voltage versus Clamp Current

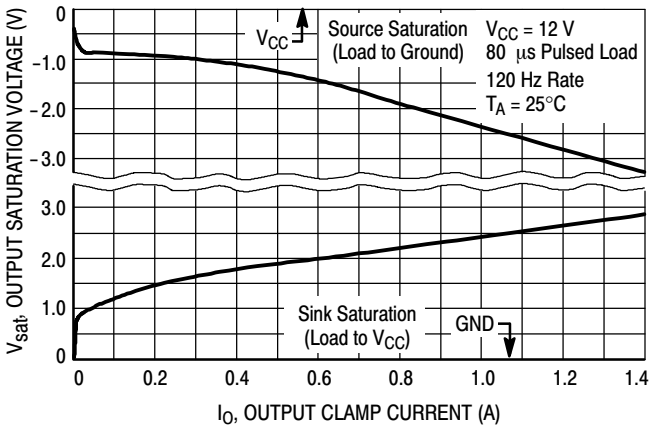

Figure 9. Drive Output Saturation Voltage versus Load Current

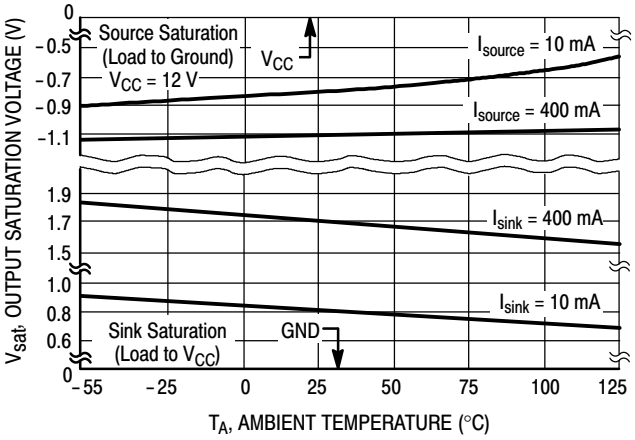

Figure 10. Drive Output Saturation Voltage versus Temperature

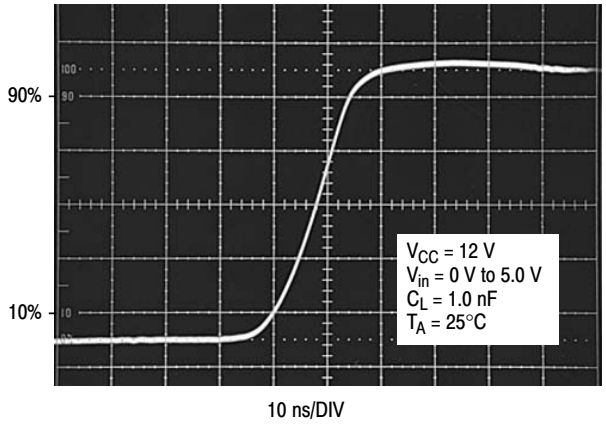

Figure 11. Drive Output Rise Time

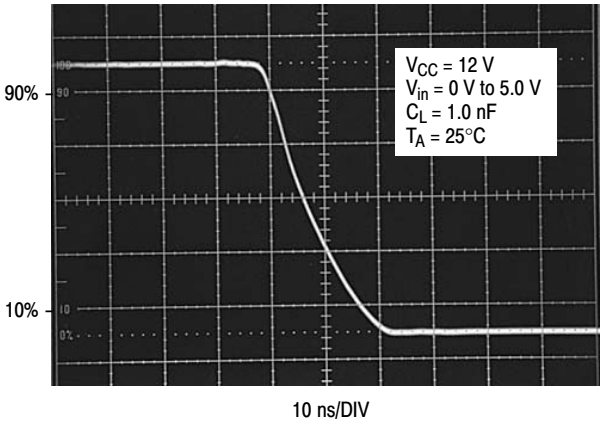

Figure 12. Drive Output Fall Time

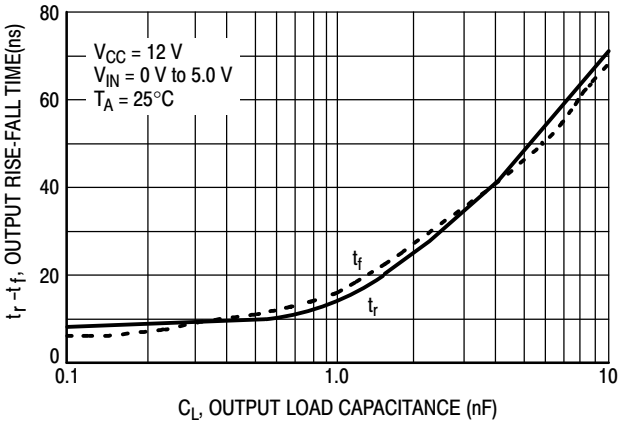

Figure 13. Drive Output Rise and Fall Time versus Load Capacitance

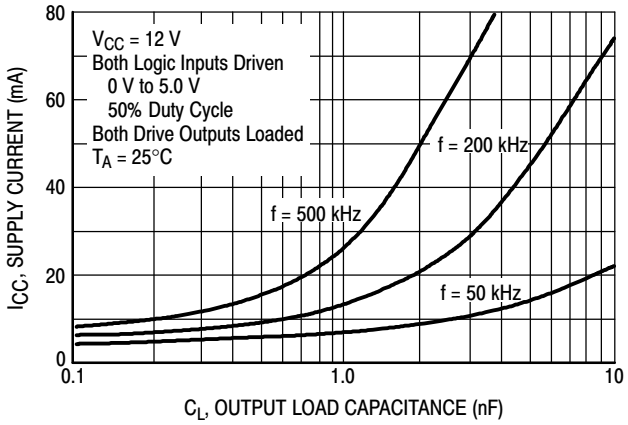

Figure 14. Supply Current versus Drive Output Load Capacitance

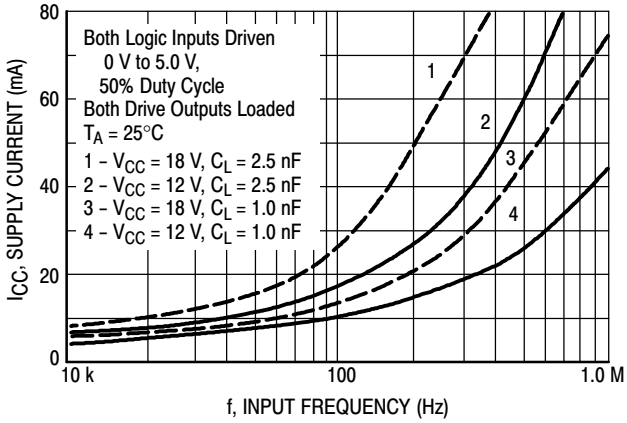

Figure 15. Supply Current versus Input Frequency

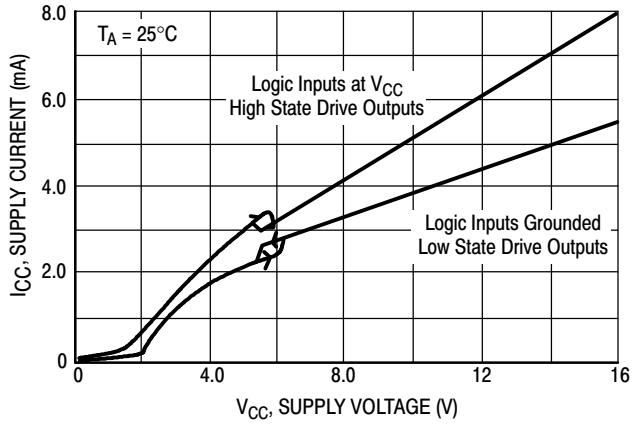

Figure 16. Supply Current versus Supply Voltage

APPLICATIONS INFORMATION

Description

The MC34152 is a dual noninverting high speed driver specifically designed to interface low current digital circuitry with power MOSFETs. This device is constructed with Schottky clamped Bipolar Analog technology which offers a high degree of performance and ruggedness in hostile industrial environments.

Input Stage

The Logic Inputs have 170 mV of hysteresis with the input threshold centered at 1.67 V. The input thresholds are insensitive to V_{CC} making this device directly compatible with CMOS and LSTTL logic families over its entire operating voltage range. Input hysteresis provides fast output switching that is independent of the input signal transition time, preventing output oscillations as the input thresholds are crossed. The inputs are designed to accept a signal amplitude ranging from ground to V_{CC}. This allows the output of one channel to directly drive the input of a second channel for master−slave operation. Each input has a 30 kΩ pulldown resistor so that an unconnected open input will cause the associated Drive Output to be in a known low state.

Output Stage

Each totem pole Drive Output is capable of sourcing and sinking up to 1.5 A with a typical ‘on’ resistance of 2.4 Ω at 1.0 A. The low ‘on’ resistance allows high output currents to be attained at a lower V_{CC} than with comparative CMOS drivers. Each output has a 100 kΩ pulldown resistor to keep the MOSFET gate low when V_{CC} is less than 1.4 V. No over current or thermal protection has been designed into the device, so output shorting to V_{CC} or ground must be avoided.

Parasitic inductance in series with the load will cause the driver outputs to ring above V_{CC} during the turn−on transition, and below ground during the turn−off transition. With CMOS drivers, this mode of operation can cause a destructive output latchup condition. The MC34152 is immune to output latchup. The Drive Outputs contain an internal diode to V_{CC} for clamping positive voltage transients. When operating with V_{CC} at 18 V, proper power supply bypassing must be observed to prevent the output ringing from exceeding the maximum 20 V device rating. Negative output transients are clamped by the internal NPN pullup transistor. Since full supply voltage is applied across

the NPN pullup during the negative output transient, power dissipation at high frequencies can become excessive. Figures 19, 20, and 21 show a method of using external Schottky diode clamps to reduce driver power dissipation.

Undervoltage Lockout

An undervoltage lockout with hysteresis prevents erratic system operation at low supply voltages. The UVLO forces the Drive Outputs into a low state as V_{CC} rises from 1.4 V to the 5.8 V upper threshold. The lower UVLO threshold is 5.3 V, yielding about 500 mV of hysteresis.

Power Dissipation

Circuit performance and long term reliability are enhanced with reduced die temperature. Die temperature increase is directly related to the power that the integrated circuit must dissipate and the total thermal resistance from the junction to ambient. The formula for calculating the junction temperature with the package in free air is:

$$T_J = T_A + P_D (R_{\theta JA})$$

where: T_J = Junction Temperature
T_A = Ambient Temperature
P_D = Power Dissipation
$R_{\theta JA}$ = Thermal Resistance Junction to Ambient

There are three basic components that make up total power to be dissipated when driving a capacitive load with respect to ground. They are:

$$P_D = P_Q + P_{C + P}T$$

where: P_Q = Quiescent Power Dissipation
P_C = Capacitive Load Power Dissipation
P_T = Transition Power Dissipation

The quiescent power supply current depends on the supply voltage and duty cycle as shown in Figure 16. The device's quiescent power dissipation is:

$$P_Q = V_{CC} (I_{CCL} [1–D] + I_{CCH} [D])$$

where: I_{CCL} = Supply Current with Low State Drive Outputs
I_{CCH} = Supply Current with High State Drive Outputs
D = Output Duty Cycle

The capacitive load power dissipation is directly related to the load capacitance value, frequency, and Drive Output voltage swing. The capacitive load power dissipation per driver is:

$$P_C = V_{CC} (V_{OH} – V_{OL}) C_L f$$

where: V_{OH} = High State Drive Output Voltage
V_{OL} = Low State Drive Output Voltage
C_L = Load Capacitance
f = Frequency

When driving a MOSFET, the calculation of capacitive load power P_C is somewhat complicated by the changing gate to source capacitance C_{GS} as the device switches. To aid in this calculation, power MOSFET manufacturers provide gate charge information on their data sheets. Figure 17 shows a curve of gate voltage versus gate charge for the ON Semiconductor MTM15N50. Note that there are three distinct slopes to the curve representing different input capacitance values. To completely switch the MOSFET 'on,' the gate must be brought to 10 V with respect to the source. The graph shows that a gate charge Q_g of 110 nC is required when operating the MOSFET with a drain to source voltage V_{DS} of 400 V.

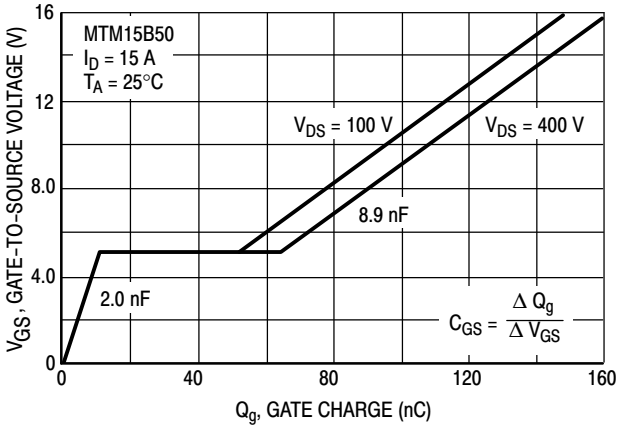

Figure 17. Gate–to–Source Voltage versus Gate charge

The capacitive load power dissipation is directly related to the required gate charge, and operating frequency. The capacitive load power dissipation per driver is:

$$P_{C(MOSFET)} = V_{CC} Q_g f$$

The flat region from 10 nC to 55 nC is caused by the drain–to–gate Miller capacitance, occurring while the MOSFET is in the linear region dissipating substantial amounts of power. The high output current capability of the MC34152 is able to quickly deliver the required gate charge for fast power efficient MOSFET switching. By operating the MC34152 at a higher V_{CC}, additional charge can be provided to bring the gate above 10 V. This will reduce the 'on' resistance of the MOSFET at the expense of higher driver dissipation at a given operating frequency.

The transition power dissipation is due to extremely short simultaneous conduction of internal circuit nodes when the Drive Outputs change state. The transition power dissipation per driver is approximately:

$$P_T \approx V_{CC} (1.08 V_{CC} C_L f – 8 \times 10^{–4})$$

P_T must be greater than zero.

Switching time characterization of the MC34152 is performed with fixed capacitive loads. Figure 13 shows that for small capacitance loads, the switching speed is limited by transistor turn–on/off time and the slew rate of the internal nodes. For large capacitance loads, the switching speed is limited by the maximum output current capability of the integrated circuit.

LAYOUT CONSIDERATIONS

High frequency printed circuit layout techniques are imperative to prevent excessive output ringing and overshoot. **Do not attempt to construct the driver circuit on wire−wrap or plug−in prototype boards.** When driving large capacitive loads, the printed circuit board must contain a low inductance ground plane to minimize the voltage spikes induced by the high ground ripple currents. All high current loops should be kept as short as possible using heavy copper runs to provide a low impedance high frequency path. For optimum drive performance, it is recommended that the initial circuit design contains dual power supply bypass capacitors connected with short leads as close to the V_{CC} pin and ground as the layout will permit. Suggested capacitors are a low inductance 0.1 μF ceramic in parallel with a 4.7 μF tantalum. Additional bypass capacitors may be required depending upon Drive Output loading and circuit layout.

Proper printed circuit board layout is extremely critical and cannot be over emphasized.

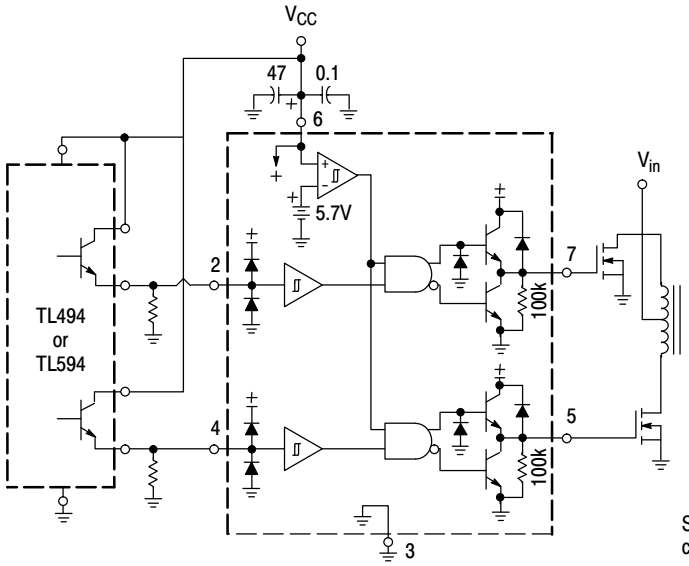

The MC34152 greatly enhances the drive capabilities of common switching regulators and CMOS/TTL logic devices.

Figure 18. Enhanced System Performance with Common Switching Regulators

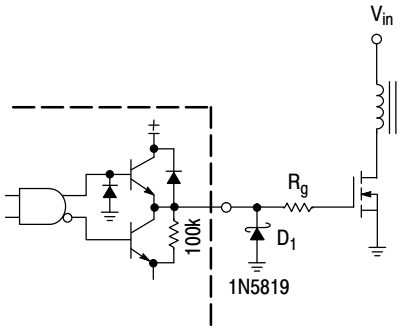

Series gate resistor R_g may be needed to damp high frequency parasitic oscillations caused by the MOSFET input capacitance and any series wiring inductance in the gate−source circuit. R_g will decrease the MOSFET switching speed. Schottky diode D_1 can reduce the driver's power dissipation due to excessive ringing, by preventing the output pin from being driven below ground.

Figure 19. MOSFET Parasitic Oscillations

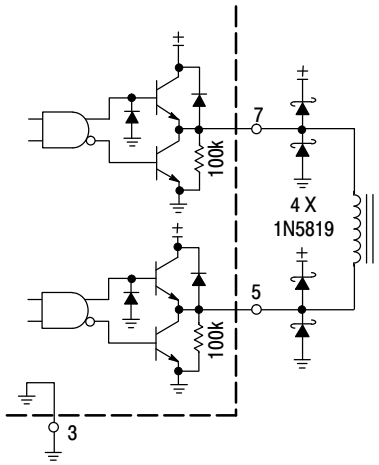

Output Schottky diodes are recommended when driving inductive loads at high frequencies. The diodes reduce the driver's power dissipation by preventing the output pins from being driven above V_{CC} and below ground.

Figure 20. Direct Transformer Drive

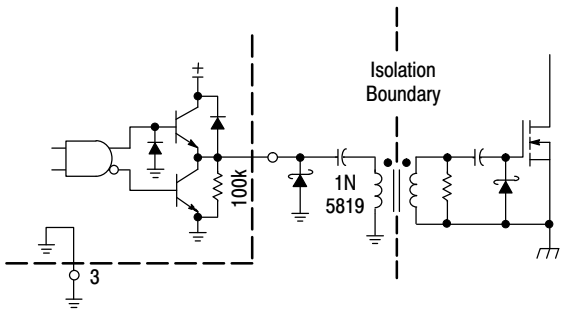

Figure 21. Isolated MOSFET Drive

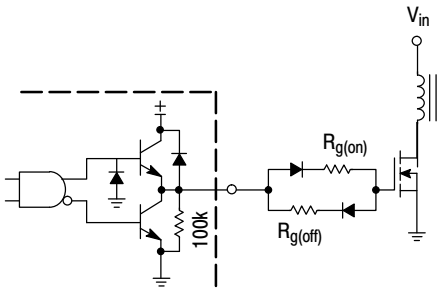

In noise sensitive applications, both conducted and radiated EMI can be reduced significantly by controlling the MOSFET's turn−on and turn−off times.

Figure 22. Controlled MOSFET Drive

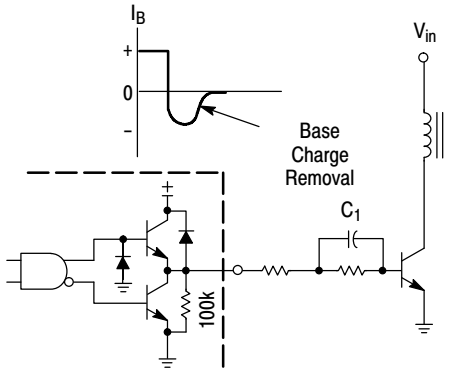

The totem−pole outputs can furnish negative base current for enhanced transistor turn−off, with the addition of capacitor C_1.

Figure 23. Bipolar Transistor Drive

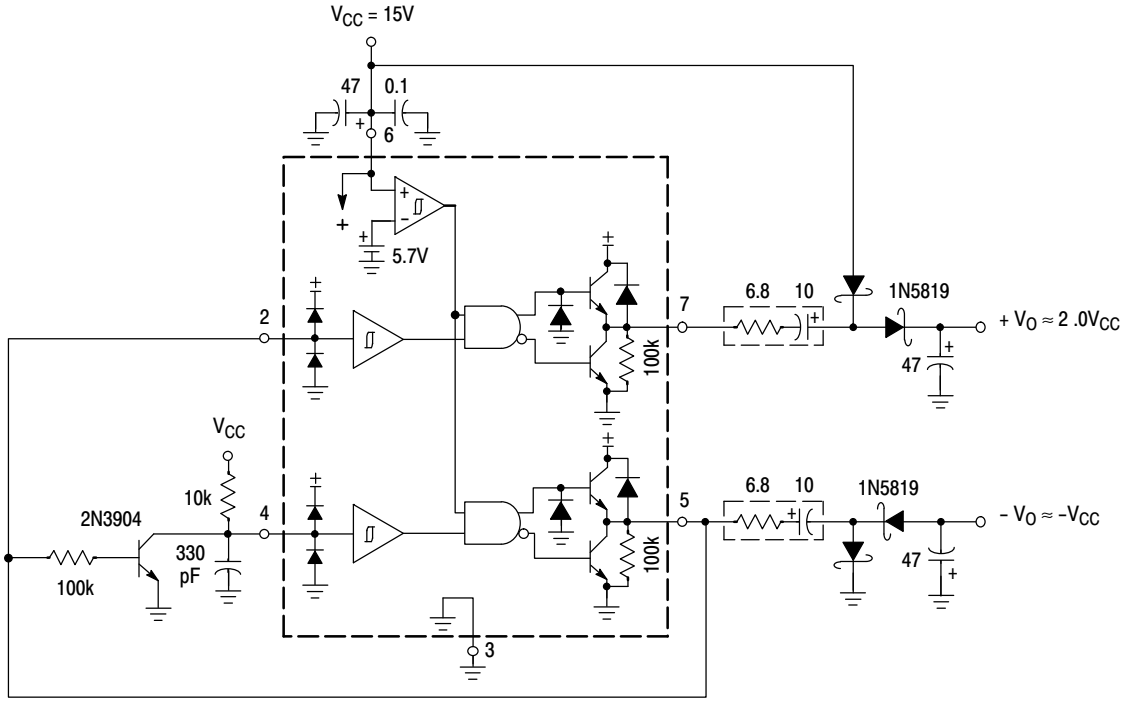

The capacitor's equivalent series resistance limits the Drive Output Current to 1.5 A. An additional series resistor may be required when using tantalum or other low ESR capacitors.

Figure 24. Dual Charge Pump Converter

Output Load Regulation		
I_O (mA)	$+V_O$ (V)	$-V_O$ (V)
0	27.7	−13.3
1.0	27.4	−12.9
10	26.4	−11.9
20	25.5	−11.2
30	24.6	−10.5
50	22.6	−9.4

ORDERING INFORMATION

Device	Package	Shipping†
MC34152DG	SOIC−8 (Pb−Free)	98 Units / Rail
MC34152DR2G	SOIC−8 (Pb−Free)	2500 Tape & Reel
MC34152PG	PDIP−8 (Pb−Free)	50 Units / Rail
MC33152DG	SOIC−8 (Pb−Free)	98 Units / Rail
MC33152DR2G	SOIC−8 (Pb−Free)	2500 Tape & Reel
MC33152PG	PDIP−8 (Pb−Free)	50 Units / Rail
MC33152VDG	SOIC−8 (Pb−Free)	98 Units / Rail
MC33152VDR2G	SOIC−8 (Pb−Free)	2500 Tape & Reel
NCV33152DR2G*	SOIC−8 (Pb−Free)	2500 Tape & Reel

†For information on tape and reel specifications, including part orientation and tape sizes, please refer to our Tape and Reel Packaging Specifications Brochure, BRD8011/D.
*NCV prefix is for automotive and other applications requiring site and change control.

PACKAGE DIMENSIONS

PDIP–8
P SUFFIX
CASE 626–05
ISSUE N

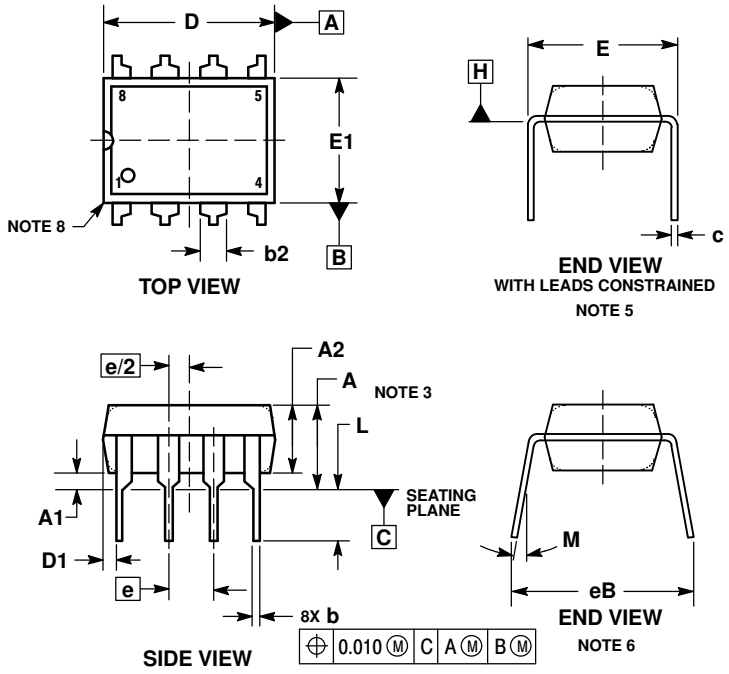

NOTES:
1. DIMENSIONING AND TOLERANCING PER ASME Y14.5M, 1994.
2. CONTROLLING DIMENSION: INCHES.
3. DIMENSIONS A, A1 AND L ARE MEASURED WITH THE PACKAGE SEATED IN JEDEC SEATING PLANE GAUGE GS–3.
4. DIMENSIONS D, D1 AND E1 DO NOT INCLUDE MOLD FLASH OR PROTRUSIONS. MOLD FLASH OR PROTRUSIONS ARE NOT TO EXCEED 0.10 INCH.
5. DIMENSION E IS MEASURED AT A POINT 0.015 BELOW DATUM PLANE H WITH THE LEADS CONSTRAINED PERPENDICULAR TO DATUM C.
6. DIMENSION E3 IS MEASURED AT THE LEAD TIPS WITH THE LEADS UNCONSTRAINED.
7. DATUM PLANE H IS COINCIDENT WITH THE BOTTOM OF THE LEADS, WHERE THE LEADS EXIT THE BODY.
8. PACKAGE CONTOUR IS OPTIONAL (ROUNDED OR SQUARE CORNERS).

	INCHES		MILLIMETERS	
DIM	MIN	MAX	MIN	MAX
A	–––	0.210	–––	5.33
A1	0.015	–––	0.38	–––
A2	0.115	0.195	2.92	4.95
b	0.014	0.022	0.35	0.56
b2	0.060 TYP		1.52 TYP	
C	0.008	0.014	0.20	0.36
D	0.355	0.400	9.02	10.16
D1	0.005	–––	0.13	–––
E	0.300	0.325	7.62	8.26
E1	0.240	0.280	6.10	7.11
e	0.100 BSC		2.54 BSC	
eB	–––	0.430	–––	10.92
L	0.115	0.150	2.92	3.81
M	–––	10°	–––	10°

PACKAGE DIMENSIONS

SOIC–8
D SUFFIX
CASE 751–07
ISSUE AK

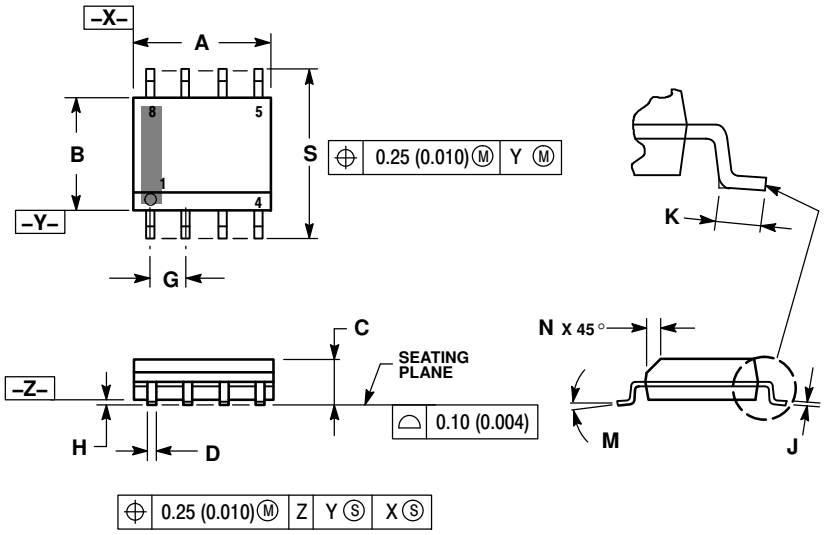

NOTES:
1. DIMENSIONING AND TOLERANCING PER ANSI Y14.5M, 1982.
2. CONTROLLING DIMENSION: MILLIMETER.
3. DIMENSION A AND B DO NOT INCLUDE MOLD PROTRUSION.
4. MAXIMUM MOLD PROTRUSION 0.15 (0.006) PER SIDE.
5. DIMENSION D DOES NOT INCLUDE DAMBAR PROTRUSION. ALLOWABLE DAMBAR PROTRUSION SHALL BE 0.127 (0.005) TOTAL IN EXCESS OF THE D DIMENSION AT MAXIMUM MATERIAL CONDITION.
6. 751–01 THRU 751–06 ARE OBSOLETE. NEW STANDARD IS 751–07.

	MILLIMETERS		INCHES	
DIM	MIN	MAX	MIN	MAX
A	4.80	5.00	0.189	0.197
B	3.80	4.00	0.150	0.157
C	1.35	1.75	0.053	0.069
D	0.33	0.51	0.013	0.020
G	1.27 BSC		0.050 BSC	
H	0.10	0.25	0.004	0.010
J	0.19	0.25	0.007	0.010
K	0.40	1.27	0.016	0.050
M	0 °	8 °	0 °	8 °
N	0.25	0.50	0.010	0.020
S	5.80	6.20	0.228	0.244

SOLDERING FOOTPRINT*

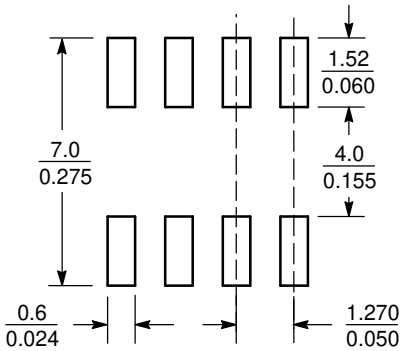

SCALE 6:1 $\left(\frac{\text{mm}}{\text{inches}}\right)$

*For additional information on our Pb–Free strategy and soldering details, please download the ON Semiconductor Soldering and Mounting Techniques Reference Manual, SOLDERRM/D.

ON Semiconductor and ON are registered trademarks of Semiconductor Components Industries, LLC (SCILLC). SCILLC reserves the right to make changes without further notice to any products herein. SCILLC makes no warranty, representation or guarantee regarding the suitability of its products for any particular purpose, nor does SCILLC assume any liability arising out of the application or use of any product or circuit, and specifically disclaims any and all liability, including without limitation special, consequential or incidental damages. "Typical" parameters which may be provided in SCILLC data sheets and/or specifications can and do vary in different applications and actual performance may vary over time. All operating parameters, including "Typicals" must be validated for each customer application by customer's technical experts. SCILLC does not convey any license under its patent rights nor the rights of others. SCILLC products are not designed, intended, or authorized for use as components in systems intended for surgical implant into the body, or other applications intended to support or sustain life, or for any other application in which the failure of the SCILLC product could create a situation where personal injury or death may occur. Should Buyer purchase or use SCILLC products for any such unintended or unauthorized application, Buyer shall indemnify and hold SCILLC and its officers, employees, subsidiaries, affiliates, and distributors harmless against all claims, costs, damages, and expenses, and reasonable attorney fees arising out of, directly or indirectly, any claim of personal injury or death associated with such unintended or unauthorized use, even if such claim alleges that SCILLC was negligent regarding the design or manufacture of the part. SCILLC is an Equal Opportunity/Affirmative Action Employer. This literature is subject to all applicable copyright laws and is not for resale in any manner.

PUBLICATION ORDERING INFORMATION

LITERATURE FULFILLMENT:
Literature Distribution Center for ON Semiconductor
P.O. Box 5163, Denver, Colorado 80217 USA
Phone: 303–675–2175 or 800–344–3860 Toll Free USA/Canada
Fax: 303–675–2176 or 800–344–3867 Toll Free USA/Canada
Email: orderlit@onsemi.com

N. American Technical Support: 800–282–9855 Toll Free USA/Canada
Europe, Middle East and Africa Technical Support:
Phone: 421 33 790 2910
Japan Customer Focus Center
Phone: 81–3–5817–1050

ON Semiconductor Website: **www.onsemi.com**

Order Literature: http://www.onsemi.com/orderlit

For additional information, please contact your local Sales Representative