EN: This Datasheet/Document is presented by the manufacturer.

Please visit our website for pricing and availability at www.hestore.hu.

DATE	DESCRIPTION	REV.
8.24.10	CHANGE AS PER ECN 10–062	A
10.04.10	CHANGE PER ECN 10–069	B
10.26.10	CHANGE PER ECN 10–075	C

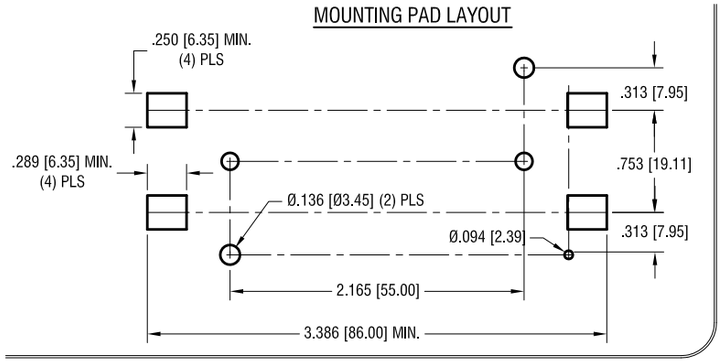

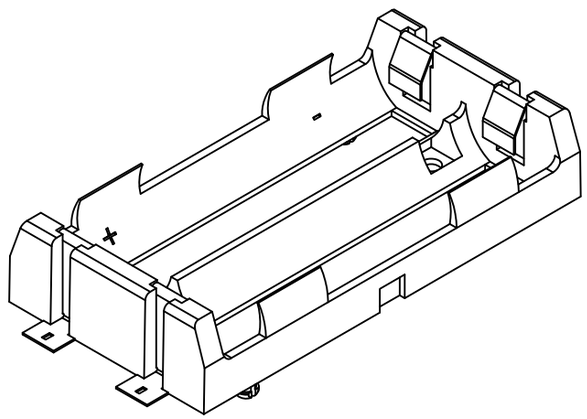

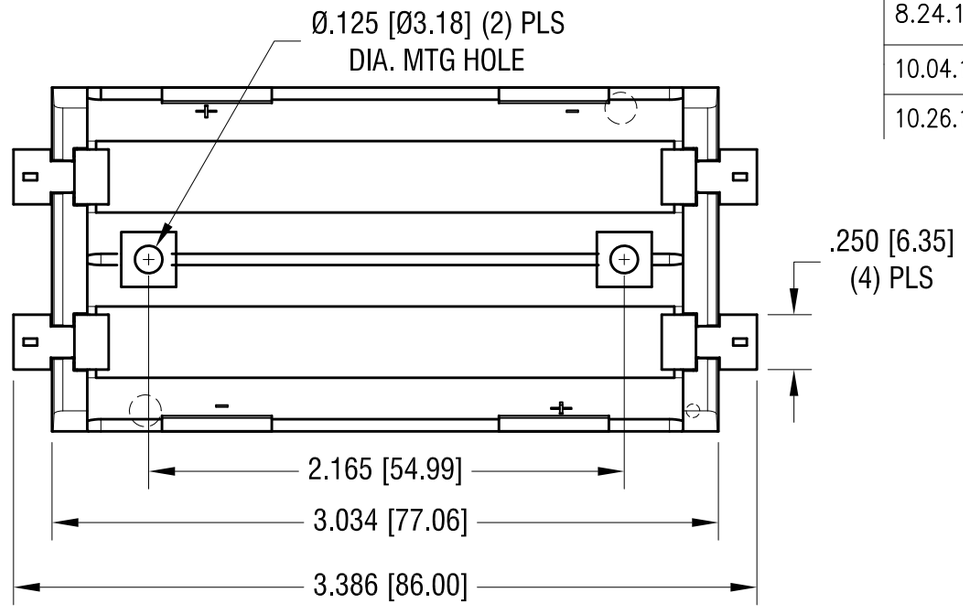

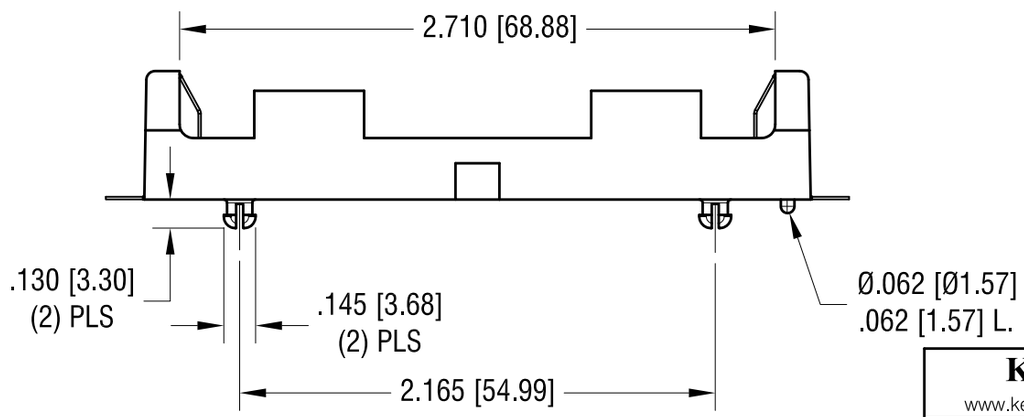

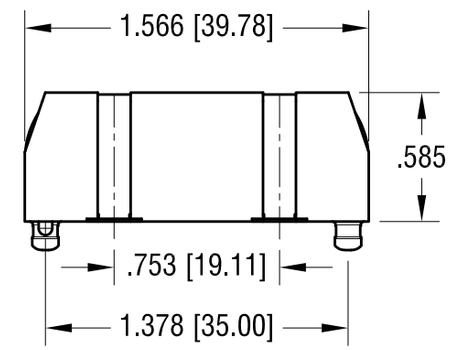

NOTE:
1. BASE:
   MAT'L: HEAT RESISTANCE NYLON
   STANYL 46 OR EQUIVALENT
2. CONTACT:
   MAT'L: .012 [0.30] THK PHOSPHOR BRONZE
   FINISH: GOLD FLASH, OVER NICKEL PLATE

THIS DOCUMENT IS THE PROPERTY OF KEYSTONE ELECTRONICS CORP. AND SHALL NOT BE REPRODUCED, DISTRIBUTED OR USED AS A BASIS FOR MANUFACTURE WITHOUT PRIOR WRITTEN PERMISSION FROM KEYSTONE ELECTRONICS CORP.

KEYSTONE ELECTRONICS CORP.
www.keyelco.com • ASTORIA, N.Y. 11105-2017 • Tel (718) 956-8900

PART NAME: DUAL SM BATTERY HOLDER , 18650

MATERIAL: AS NOTED

FINISH: AS NOTED

DRN BY: NT | DATE: 8.19.10

APP'D: LN | SCALE: 1.25X

TOLERANCES: DECIMAL ± .010 [± 0.25] ; ANGULAR ± 1° ; UNLESS OTHERWISE SPECIFIED

CODE: C

DWG NO. 1048