EN: This Datasheet/Document is presented by the manufacturer.

Please visit our website for pricing and availability at www.hestore.hu.

CDx4HC165, CDx4HCT165 High-Speed CMOS Logic 8-Bit Parallel-In/Serial-Out Shift Register

1 Features

- Buffered inputs
- Asynchronous parallel load
- Complementary outputs
- Fanout (over temperature range)
  - Standard outputs: 10 LSTTL Loads
  - Bus driver outputs: 15 LSTTL Loads
- Wide operating temperature range: -55°C to 125°C
- Balanced propagation delay and transition times
- Significant power reduction compared to LSTTL Logic ICs
- HC Types
  - 2 V to 6 V Operation
  - High Noise Immunity: N_{IL} = 30%, N_{IH} = 30% of V_{CC} at V_{CC} = 5V
- HCT Types
  - 4.5 V to 5.5 V Operation
  - Direct LSTTL Input Logic Compatibility, V_{IL} = 0.8 V (Max), V_{IH} = 2 V (Min)
  - CMOS Input Compatibility, $I_I \leq 1$ µA at V_{OL}, V_{OH}

2 Description

The ’HC165 and ’HCT165 are 8-bit parallel or serial-in shift registers with complementary serial outputs (Q_H and $\overline{Q}_H$) available from the last stage. When the parallel load (SH/$\overline{LD}$) input is LOW, parallel data from the A to H inputs are loaded into the register asynchronously. When the SH/$\overline{LD}$ is HIGH, data enters the register serially at the SER input and shifts one place to the right (A→B→C, etc.) with each positive-going clock transition. This feature allows parallel-to-serial converter expansion by connecting the Q_H output to the SER input of the succeeding device.

Device Information

PART NUMBER	PACKAGE(1)	BODY SIZE (NOM)
CD54HC165F3A	CDIP (16)	24.38 mm × 6.92 mm
CD74HC165M	SOIC (16)	9.90 mm × 3.90 mm
CD74HC165E	PDIP (16)	19.31 mm × 6.35 mm
CD54HCT165F3A	CDIP (16)	24.38 mm × 6.92 mm
CD74HCT165M	SOIC (16)	9.90 mm × 3.90 mm
CD74HCT165E	PDIP (16)	19.31 mm × 6.35 mm

(1) For all available packages, see the orderable addendum at the end of the data sheet.

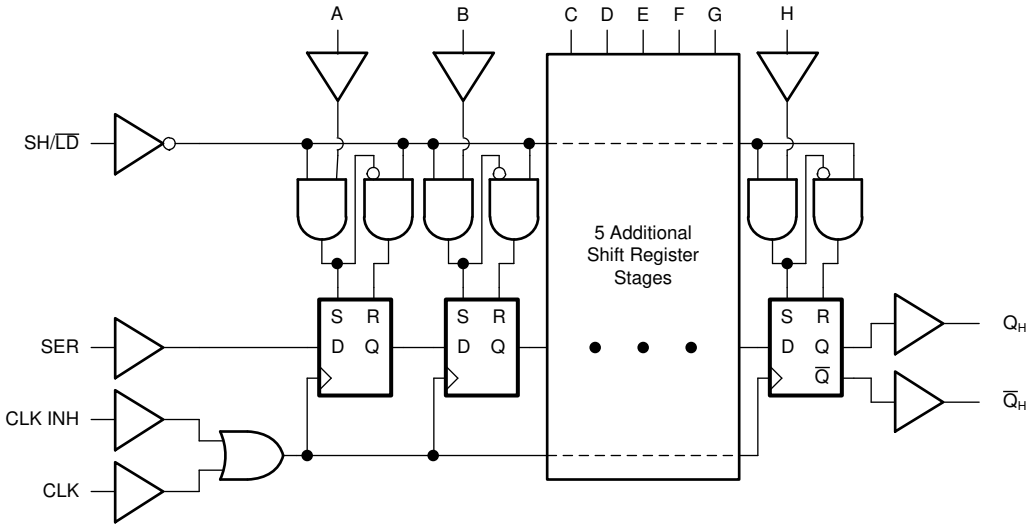

Functional Diagram

An IMPORTANT NOTICE at the end of this data sheet addresses availability, warranty, changes, use in safety-critical applications, intellectual property matters and other important disclaimers. PRODUCTION DATA.

Table of Contents

1 Features....1
2 Description....1
3 Revision History....2
4 Pin Configuration and Functions....3
5 Specifications....4
5.1 Absolute Maximum Ratings....4
5.2 Reccomended Operating Conditions....4
5.3 Thermal Information....4
5.4 Electrical Characteristics....5
5.5 Prerequisite for Switching Characteristics....6
5.6 Switching Characteristics....7
6 Parameter Measurement Information....8
7 Detailed Description....10
7.1 Overview....10
7.2 Functional Block Diagram....10
7.3 Device Functional Modes....10
8 Power Supply Recommendations....11
9 Layout....11
9.1 Layout Guidelines....11
10 Device and Documentation Support....12
10.1 Receiving Notification of Documentation Updates....12
10.2 Support Resources....12
10.3 Trademarks....12
10.4 Electrostatic Discharge Caution....12
10.5 Glossary....12
11 Mechanical, Packaging, and Orderable Information....12

3 Revision History

NOTE: Page numbers for previous revisions may differ from page numbers in the current version.

Changes from Revision C (October 2003) to Revision D (November 2021)	Page
• Updated the numbering, formatting, tables, figures, and cross-references throughout the document to reflect modern data sheet standards	1
• Updated pin names to match current TI naming conventions. $\overline{PL}$ is now SH/$\overline{LD}$, CP is now CLK, D4 is now E, D5 is now F, D6 is now G, D7 is now H, $\overline{Q}_7$ is now $\overline{Q}_H$, Q_7 is now Q_H, DS is now SER, D0 is now A, D1 is now B, D2 is now C, D3 is now D, $\overline{CE}$ is now CLK INH	1

Copyright © 2021 Texas Instruments Incorporated

4 Pin Configuration and Functions

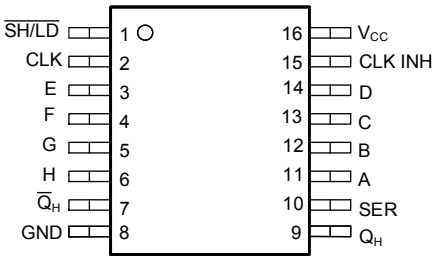

J, N, or D package
16-Pin CDIP, PDIP, SOIC
Top View

5 Specifications

5.1 Absolute Maximum Ratings

over operating free-air temperature range (unless otherwise noted)(1)

			MIN	MAX	UNIT
V_{CC}	Supply voltage		–0.5	7	V
I_{IK}	Input diode current	For V_I < -0.5 V or V_I > V_{CC} + 0.5 V		±20	mA
I_{OK}	Output diode current	For V_O < -0.5 V or V_O > V_{CC} + 0.5 V		±20	mA
IO	Drain current per output	For V_O < -0.5 V V_O > V_{CC} + 0.5 V		±25	mA
I_O	Output source or sink current per output pin	For V_O > -0.5 V or V_O < V_{CC} + 0.5 V		±25	mA
	Continuous current through V_{CC} or GND			±50	mA
T_J	Junction temperature			150	°C
T_{stg}	Storage temperature		-65	150	°C
	Lead temperature (Soldering 10s) (SOIC- Lead tips only)			300	°C

(1) Stresses beyond those listed under *absolute maximum ratings* may cause permanent damage to the device. These are stress ratings only and functional operation of the device at these or any other conditions beyond those indicated under *recommended operating conditions* is not implied. Exposure to absolute-maximum-rated conditions for extended periods may affect device reliability.

5.2 Reccomended Operating Conditions

			MIN	MAX	UNIT
V_{CC}	Supply voltage range	HC Types	2	6	V
		HCT Types	4.5	5.5	
V_I, V_O	Input or output voltage		0	V_{CC}	V
t_t	Input rise and fall time	2 V		1000	ns
		4.5 V		500	
		6 V		400	
T_A	Temperature range		–55	125	℃

5.3 Thermal Information

THERMAL METRIC		CD74HC165, CD74HCT165		UNIT
		D (SOIC)	N (PDIP)	
		16 PINS	16 PINS	
$R_{\theta JA}$	Junction-to-ambient thermal resistance(1)	73	67	°C/W

(1) For more information about traditional and new thermal metrics, see the *Semiconductor and IC package thermal metrics* application report.

Copyright © 2021 Texas Instruments Incorporated

5.4 Electrical Characteristics

PARAMETER		TEST CONDITIONS(2)	V_{CC} (V)	25℃			-40℃ to 85℃		-55℃ to 125℃		UNIT
				MIN	TYP	MAX	MIN	MAX	MIN	MAX	
HC TYPES											
V_{IH}	High level input voltage		2	1.5			1.5		1.5		V
			4.5	3.15			3.15		3.15		V
			6	4.2			4.2		4.2		V
V_{IL}	Low level input voltage		2			0.5		0.5		0.5	V
			4.5			1.35		1.35		1.35	V
			6			1.8		1.8		1.8	V
V_{OH}	High level output voltage	I_{OH} = – 20 μA	2	1.9			1.9		1.9		V
		I_{OH} = – 20 μA	4.5	4.4			4.4		4.4		V
		I_{OH} = – 20 μA	6	5.9			5.9		5.9		V
	High level output voltage	I_{OH} = – 4 mA	4.5	3.98			3.84		3.7		V
		I_{OH} = – 5.2 mA	6	5.48			5.34		5.2		V
V_{OL}	Low level output voltage	I_{OL} = 20 μA	2			0.1		0.1		0.1	V
		I_{OL} = 20 μA	4.5			0.1		0.1		0.1	V
		I_{OL} = 20 μA	6			0.1		0.1		0.1	V
	Low level output voltage	I_{OL} = 4 mA	4.5			0.26		0.33		0.4	V
		I_{OL} = 5.2 mA	6			0.26		0.33		0.4	V
I_I	Input leakage current	V_I = V_{CC} or GND	6			±0.1		±1		±1	μA
I_{CC}	Supply current	V_I = V_{CC} or GND	6			8		80		160	μA
HCT TYPES											
V_{IH}	High level input voltage		4.5 to 5.5	2			2		2		V
V_{IL}	Low level input voltage		4.5 to 5.5			0.8		0.8		0.8	V
V_{OH}	High level output voltage	I_{OH} = – 20 μA	4.5	4.4			4.4		4.4		V
	High level output voltage	I_{OH} = – 4 mA	4.5	3.98			3.84		3.7		V
V_{OL}	Low level output voltage	I_{OL} = 20 μA	4.5			0.1		0.1		0.1	V
	Low level output voltage	I_{OL} = 4 mA	4.5			0.26		0.33		0.4	V
I_I	Input leakage current	V_I = V_{CC} or GND	5.5			±0.1		±1		±1	μA
I_{CC}	Supply current	V_I = V_{CC} or GND	5.5			8		80		160	μA
ΔI_{CC} (1)	Additional quiescent device current per input pin	SER, A to H inputs held at V_{CC} – 2.1	4.5 to 5.5		100	126		157.5		171.5	μA
		CLK and SH/$\overline{LD}$ inputs held at V_{CC} – 2.1	4.5 to 5.5		100	234		292.5		318.5	

(1) For dual-supply systems theoretical worst case (V_I = 2.4 V, V_{CC} = 5.5 V) specification is 1.8 mA.
(2) V_I = V_{IH} or V_{IL}.

Copyright © 2021 Texas Instruments Incorporated

5.5 Prerequisite for Switching Characteristics

PARAMETER		V_{CC} (V)	25℃		-40℃ to 85℃		-55℃ to 125℃		UNIT
			MIN	MAX	MIN	MAX	MIN	MAX	
t_{WL}, t_{WH}	CLK Pulse Width	2	80		100		120		ns
		4.5	16		20		24		
		6	14		17		20		
t_{WL}	SH/$\overline{LD}$ Pulse Width	2	80		100		120		ns
		4.5	16		20		24		
		6	14		17		20		
t_{SU}	Set-up Time SER to CLK	2	80		100		120		ns
		4.5	16		20		24		
		6	14		17		20		
$t_{SU(L)}$	CLK INH to CLK	2	80		100		120		ns
		4.5	16		20		24		
		6	14		17		20		
t_{SU}	A-H to SH/$\overline{LD}$	2	80		100		120		ns
		4.5	16		20		24		
		6	14		17		20		
t_H	Hold Time SER to CLK or CLK INH	2	35		45		55		ns
		4.5	7		9		11		
		6	6		8		9		
t_H	CLK INH to CLK	2	0		0		0		ns
		4.5	0		0		0		
		6	0		0		0		
t_{REC}	Recovery Time SH/$\overline{LD}$ to CLK	2	100		125		150		ns
		4.5	20		25		30		
		6	17		21		26		
f_{MAX}	Maximum Clock Pulse Frequency	2	6		5		4		MHz
		4.5	30		24		20		
		6	35		28		24		
HCT TYPES									
t_{WL}, t_{WH}	CLK Pulse Width	4.5	18		23		27		ns
t_{WL}	SH/$\overline{LD}$ Pulse Width	4.5	20		25		30		ns
t_{SU}	Set-up Time SER to CLK	4.5	20		25		30		ns
$t_{SU(L)}$	CLK INH to CLK	4.5	20		25		30		ns
t_{SU}	A-H to SH/$\overline{LD}$	6	20		25		30		ns
t_H	Hold Time SER to CLK or CLK INH	4.5	7		9		11		ns
t_S, t_H	CLK INH to CLK	4.5	0		0		0		ns
t_{REC}	Recovery Time SH/$\overline{LD}$ to CLK	4.5	20		25		30		ns
f_{MAX}	Maximum Clock Pulse Frequency	4.5	27		22		18		MHz

Copyright © 2021 Texas Instruments Incorporated

5.6 Switching Characteristics

Input t_r, t_f = 6 ns. Unless otherwise specified, C_L = 50pF

PARAMETER		V_{CC}(V)	25℃		-40℃ to 85℃	-55℃ to 125℃	UNIT
			TYP	MAX	MAX	MAX	
HC TYPES							
t_{pd}	CLK or CLK INH to Q_H or $\overline{Q}_H$	2		165	205	250	ns
		4.5	13(3)	33	41	50	ns
		6		28	35	43	ns
	SH/$\overline{LD}$ to Q_H or $\overline{Q}_H$	2		175	220	265	ns
		4.5	14(3)	35	44	53	ns
		6		30	37	45	ns
	H to Q_H or $\overline{Q}_H$	2		150	190	225	ns
		4.5	12(3)	30	38	45	ns
		6		26	33	38	ns
t_t	Output Transition Times	2		75	95	110	ns
		4.5		15	19	22	ns
		6		13	16	19	ns
C_{IN}	Input Capacitance			10	10	10	pF
C_{PD}	Power Dissipation Capacitance(1) (2)	5	17				pF
HCT TYPES							
t_{pd}	CLK or CLK INH to Q_H or $\overline{Q}_H$	4.5	17(3)	40	50	60	ns
	SH/$\overline{LD}$ to Q_H or $\overline{Q}_H$	4.5	17(3)	40	50	60	ns
	H to Q_H or $\overline{Q}_H$	4.5	14(3)	35	44	53	ns
t_t	Output Transition Times	4.5		15	19	22	ns
C_{IN}	Input Capacitance			10	10	10	pF
C_{PD}	Power Dissipation Capacitance(1) (2)	5	24				pF

(1) C_{PD} is used to determine the dynamic power consumption, per package.
(2) $P_D = V_{CC}{}^2 f_i + \Sigma (C_L V_{CC}{}^2 + f_O)$ where f_i = Input Frequency, f_O = Output Frequency, C_L = Output Load Capacitance, V_{CC} = Supply Voltage.
(3) C_L = 15 pF and V_{CC} = 5 V.

Copyright © 2021 Texas Instruments Incorporated

6 Parameter Measurement Information

Phase relationships between waveforms were chosen arbitrarily. All input pulses are supplied by generators having the following characteristics: PRR ≤ 1 MHz, Z_O = 50 Ω, t_t < 6 ns.

For clock inputs, f_{max} is measured when the input duty cycle is 50%.

The outputs are measured one at a time with one input transition per measurement.

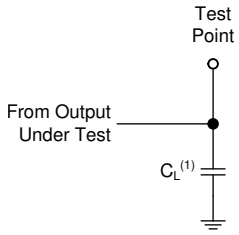

(1) C_L includes probe and test-fixture capacitance.

Figure 6-1. Load Circuit for Push-Pull Outputs

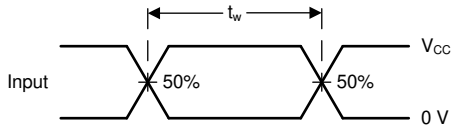

Figure 6-2. Voltage Waveforms, Standard CMOS Inputs Pulse Duration

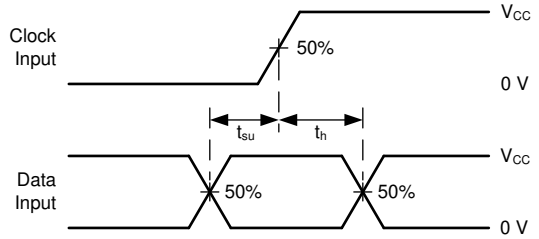

Figure 6-3. Voltage Waveforms, Standard CMOS Inputs Setup and Hold Times

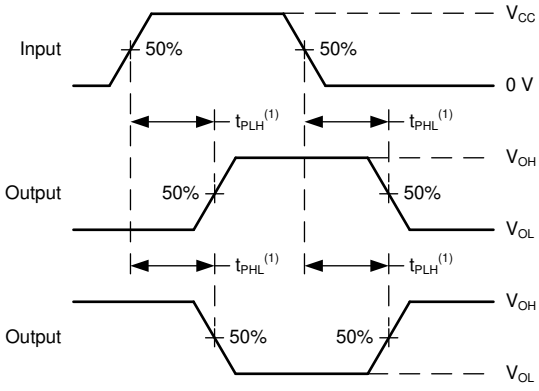

(1) The greater between t_{PLH} and t_{PHL} is the same as t_{pd}.

Figure 6-4. Voltage Waveforms, Standard CMOS Inputs Setup Propagation Delays

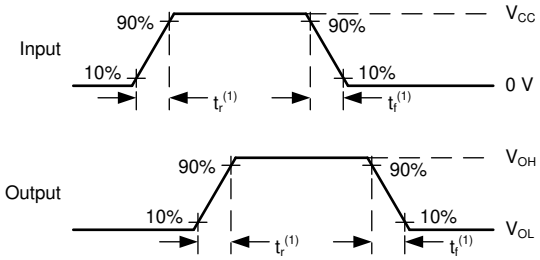

(1) The greater between t_r and t_f is the same as t_t.

Figure 6-5. Voltage Waveforms, Input and Output Transition Times for Standard CMOS Input Devices

Copyright © 2021 Texas Instruments Incorporated

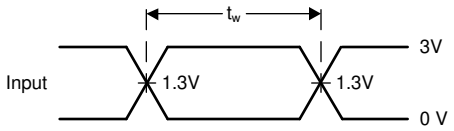

Figure 6-6. Voltage Waveforms, TTL-Compatible CMOS Inputs Pulse Duration

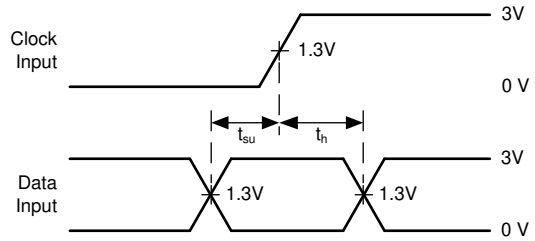

Figure 6-7. Voltage Waveforms, TTL-Compatible CMOS Inputs Setup and Hold Times

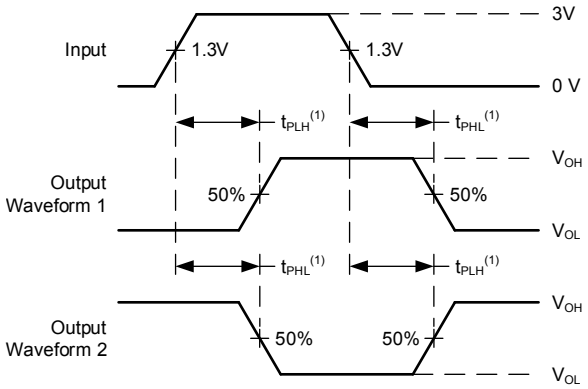

(1) The greater between t_{PLH} and t_{PHL} is the same as t_{pd}.

Figure 6-8. Voltage Waveforms, TTL-Compatible CMOS Inputs Propagation Delays

Copyright © 2021 Texas Instruments Incorporated

7 Detailed Description

7.1 Overview

The ’HC165 and ’HCT165 are 8-bit parallel or serial-in shift registers with complementary serial outputs (Q_H and $\overline{Q}_H$) available from the last stage. When the parallel load (SH/$\overline{LD}$) input is LOW, parallel data from the A to H inputs are loaded into the register asynchronously. When the SH/$\overline{LD}$ is HIGH, data enters the register serially at the SER input and shifts one place to the right (A→B→C, etc.) with each positive-going clock transition. This feature allows parallel-to-serial converter expansion by connecting the Q_H output to the SER input of the succeeding device.

For predictable operation the LOW-to-HIGH transition of CLK INH should only take place while CLK is HIGH. Also, CLK and CLK INH should be LOW before the LOW-to-HIGH transition of SH/$\overline{LD}$ to prevent shifting the data when SH/$\overline{LD}$ goes HIGH.

7.2 Functional Block Diagram

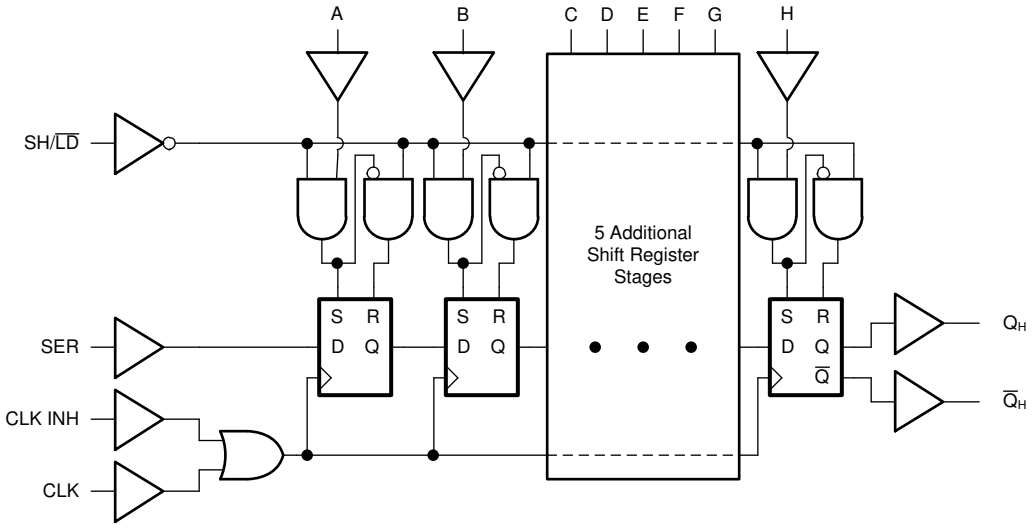

7.3 Device Functional Modes

Table 7-1. Truth Table(1)

OPERATING MODE	INPUTS					QnREGISTER		OUTPUTS	
	SH$\overline{LD}$	CLK INH	CLK	SER	A - H	Q_A	Q_B - Q_G	Q_H	$\overline{Q}_H$
Parallel Load	L	X	X	X	L	L	L-L	L	H
	L	X	X	X	H	H	H-H	H	L
Serial Shift	H	L	↑	l	X	L	q_A - q_F	q_G	$\overline{q}_G$
	H	L	↑	h	X	H	q_A - q_F	q_G	$\overline{q}_G$
Hold (Do Nothing)	H	H	X	X	X	q_A	q_B - q_G	q_H	$\overline{q}_H$

(1) H = High voltage level.
h = High voltage level one set-up time prior to the low-to-high clock transition.
l = Low voltage level one set-up time prior to the low-to-high clock transition.
L = Low voltage level.
X = Don’t care.
↑ = Transition from low to high level.
q_n = Lower case letters indicate the state of the reference output clock transition.

Copyright © 2021 Texas Instruments Incorporated

8 Power Supply Recommendations

The power supply can be any voltage between the minimum and maximum supply voltage rating located in the *Recommended Operating Conditions*. Each V_{CC} terminal should have a good bypass capacitor to prevent power disturbance. A 0.1-µF capacitor is recommended for this device. It is acceptable to parallel multiple bypass caps to reject different frequencies of noise. The 0.1-µF and 1-µF capacitors are commonly used in parallel. The bypass capacitor should be installed as close to the power terminal as possible for best results.

9 Layout

9.1 Layout Guidelines

When using multiple-input and multiple-channel logic devices inputs must not ever be left floating. In many cases, functions or parts of functions of digital logic devices are unused; for example, when only two inputs of a triple-input AND gate are used or only 3 of the 4 buffer gates are used. Such unused input pins must not be left unconnected because the undefined voltages at the outside connections result in undefined operational states. All unused inputs of digital logic devices must be connected to a logic high or logic low voltage, as defined by the input voltage specifications, to prevent them from floating. The logic level that must be applied to any particular unused input depends on the function of the device. Generally, the inputs are tied to GND or V_{CC}, whichever makes more sense for the logic function or is more convenient.

Copyright © 2021 Texas Instruments Incorporated

10 Device and Documentation Support

TI offers an extensive line of development tools. Tools and software to evaluate the performance of the device, generate code, and develop solutions are listed below.

10.1 Receiving Notification of Documentation Updates

To receive notification of documentation updates, navigate to the device product folder on ti.com. Click on *Subscribe to updates* to register and receive a weekly digest of any product information that has changed. For change details, review the revision history included in any revised document.

10.2 Support Resources

TI E2E™ support forums are an engineer's go-to source for fast, verified answers and design help — straight from the experts. Search existing answers or ask your own question to get the quick design help you need.

Linked content is provided "AS IS" by the respective contributors. They do not constitute TI specifications and do not necessarily reflect TI's views; see TI's Terms of Use.

10.3 Trademarks

TI E2E™ is a trademark of Texas Instruments.
All trademarks are the property of their respective owners.

10.4 Electrostatic Discharge Caution



This integrated circuit can be damaged by ESD. Texas Instruments recommends that all integrated circuits be handled with appropriate precautions. Failure to observe proper handling and installation procedures can cause damage.

ESD damage can range from subtle performance degradation to complete device failure. Precision integrated circuits may be more susceptible to damage because very small parametric changes could cause the device not to meet its published specifications.

10.5 Glossary

TI Glossary	This glossary lists and explains terms, acronyms, and definitions.

11 Mechanical, Packaging, and Orderable Information

The following pages include mechanical, packaging, and orderable information. This information is the most current data available for the designated devices. This data is subject to change without notice and revision of this document. For browser-based versions of this data sheet, refer to the left-hand navigation.

Copyright © 2021 Texas Instruments Incorporated

PACKAGING INFORMATION

Orderable part number	Status (1)	Material type (2)	Package | Pins	Package qty | Carrier	RoHS (3)	Lead finish/ Ball material (4)	MSL rating/ Peak reflow (5)	Op temp (°C)	Part marking (6)
5962-8685501EA	Active	Production	CDIP (J) | 16	25 | TUBE	No	SNPB	N/A for Pkg Type	-55 to 125	5962-8685501EA CD54HCT165F3A
CD54HC165F3A	Active	Production	CDIP (J) | 16	25 | TUBE	No	SNPB	N/A for Pkg Type	-55 to 125	8409501EA CD54HC165F3A
CD54HC165F3A.A	Active	Production	CDIP (J) | 16	25 | TUBE	No	SNPB	N/A for Pkg Type	-55 to 125	8409501EA CD54HC165F3A
CD54HCT165F3A	Active	Production	CDIP (J) | 16	25 | TUBE	No	SNPB	N/A for Pkg Type	-55 to 125	5962-8685501EA CD54HCT165F3A
CD54HCT165F3A.A	Active	Production	CDIP (J) | 16	25 | TUBE	No	SNPB	N/A for Pkg Type	-55 to 125	5962-8685501EA CD54HCT165F3A
CD74HC165E	Last Time Buy	Production	PDIP (N) | 16	25 | TUBE	Yes	NIPDAU	N/A for Pkg Type	-55 to 125	CD74HC165E
CD74HC165E.A	Last Time Buy	Production	PDIP (N) | 16	25 | TUBE	Yes	NIPDAU	N/A for Pkg Type	-55 to 125	CD74HC165E
CD74HC165M	Obsolete	Production	SOIC (D) | 16	-	-	Call TI	Call TI	-55 to 125	HC165M
CD74HC165M96	Active	Production	SOIC (D) | 16	2500 | LARGE T&R	Yes	NIPDAU | SN	Level-1-260C-UNLIM	-55 to 125	HC165M
CD74HC165M96.A	Active	Production	SOIC (D) | 16	2500 | LARGE T&R	Yes	NIPDAU	Level-1-260C-UNLIM	-55 to 125	HC165M
CD74HC165MT	Obsolete	Production	SOIC (D) | 16	-	-	Call TI	Call TI	-55 to 125	HC165M
CD74HCT165E	Active	Production	PDIP (N) | 16	25 | TUBE	Yes	NIPDAU	N/A for Pkg Type	-55 to 125	CD74HCT165E
CD74HCT165E.A	Active	Production	PDIP (N) | 16	25 | TUBE	Yes	NIPDAU	N/A for Pkg Type	-55 to 125	CD74HCT165E
CD74HCT165M	Obsolete	Production	SOIC (D) | 16	-	-	Call TI	Call TI	-55 to 125	HCT165M
CD74HCT165M96	Active	Production	SOIC (D) | 16	2500 | LARGE T&R	Yes	NIPDAU | SN	Level-1-260C-UNLIM	-55 to 125	HCT165M
CD74HCT165M96.A	Active	Production	SOIC (D) | 16	2500 | LARGE T&R	Yes	NIPDAU	Level-1-260C-UNLIM	-55 to 125	HCT165M
CD74HCT165M96G4	Active	Production	SOIC (D) | 16	2500 | LARGE T&R	Yes	NIPDAU	Level-1-260C-UNLIM	-55 to 125	HCT165M
CD74HCT165M96G4.A	Active	Production	SOIC (D) | 16	2500 | LARGE T&R	Yes	NIPDAU	Level-1-260C-UNLIM	-55 to 125	HCT165M

(1) **Status:** For more details on status, see our product life cycle.

(2) **Material type:** When designated, preproduction parts are prototypes/experimental devices, and are not yet approved or released for full production. Testing and final process, including without limitation quality assurance, reliability performance testing, and/or process qualification, may not yet be complete, and this item is subject to further changes or possible discontinuation. If available for ordering, purchases will be subject to an additional waiver at checkout, and are intended for early internal evaluation purposes only. These items are sold without warranties of any kind.

(3) **RoHS values:** Yes, No, RoHS Exempt. See the TI RoHS Statement for additional information and value definition.

(4) **Lead finish/Ball material:** Parts may have multiple material finish options. Finish options are separated by a vertical ruled line. Lead finish/Ball material values may wrap to two lines if the finish value exceeds the maximum column width.

(5) **MSL rating/Peak reflow:** The moisture sensitivity level ratings and peak solder (reflow) temperatures. In the event that a part has multiple moisture sensitivity ratings, only the lowest level per JEDEC standards is shown. Refer to the shipping label for the actual reflow temperature that will be used to mount the part to the printed circuit board.

(6) **Part marking:** There may be an additional marking, which relates to the logo, the lot trace code information, or the environmental category of the part.

Multiple part markings will be inside parentheses. Only one part marking contained in parentheses and separated by a "~" will appear on a part. If a line is indented then it is a continuation of the previous line and the two combined represent the entire part marking for that device.

Important Information and Disclaimer: The information provided on this page represents TI's knowledge and belief as of the date that it is provided. TI bases its knowledge and belief on information provided by third parties, and makes no representation or warranty as to the accuracy of such information. Efforts are underway to better integrate information from third parties. TI has taken and continues to take reasonable steps to provide representative and accurate information but may not have conducted destructive testing or chemical analysis on incoming materials and chemicals. TI and TI suppliers consider certain information to be proprietary, and thus CAS numbers and other limited information may not be available for release.

In no event shall TI's liability arising out of such information exceed the total purchase price of the TI part(s) at issue in this document sold by TI to Customer on an annual basis.

OTHER QUALIFIED VERSIONS OF CD54HC165, CD54HCT165, CD74HC165, CD74HCT165 :

- Catalog : CD74HC165, CD74HCT165
- Military : CD54HC165, CD54HCT165

NOTE: Qualified Version Definitions:

- Catalog - TI's standard catalog product
- Military - QML certified for Military and Defense Applications

TAPE AND REEL INFORMATION

REEL DIMENSIONS

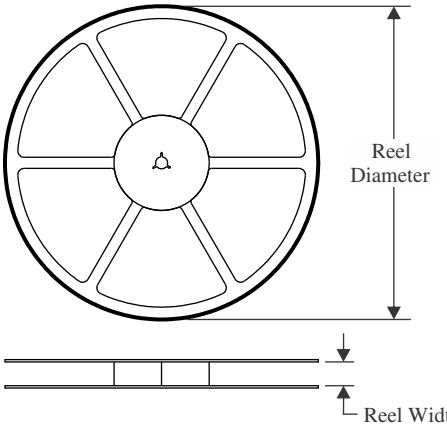

TAPE DIMENSIONS

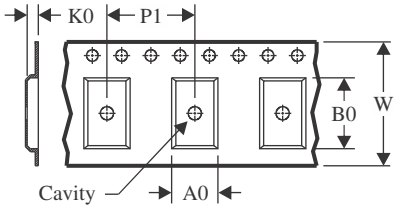

A0	Dimension designed to accommodate the component width
B0	Dimension designed to accommodate the component length
K0	Dimension designed to accommodate the component thickness
W	Overall width of the carrier tape
P1	Pitch between successive cavity centers

QUADRANT ASSIGNMENTS FOR PIN 1 ORIENTATION IN TAPE

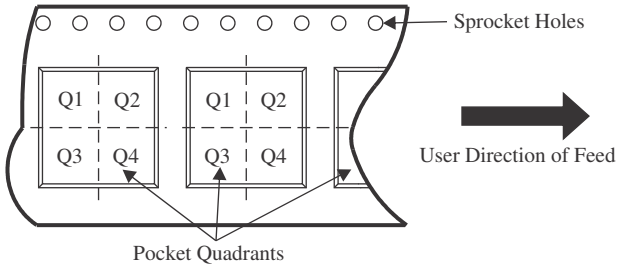

*All dimensions are nominal

Device	Package Type	Package Drawing	Pins	SPQ	Reel Diameter (mm)	Reel Width W1 (mm)	A0 (mm)	B0 (mm)	K0 (mm)	P1 (mm)	W (mm)	Pin1 Quadrant
CD74HC165M96	SOIC	D	16	2500	330.0	16.4	6.5	10.3	2.1	8.0	16.0	Q1
CD74HC165M96	SOIC	D	16	2500	330.0	16.4	6.5	10.3	2.1	8.0	16.0	Q1
CD74HCT165M96	SOIC	D	16	2500	330.0	16.4	6.5	10.3	2.1	8.0	16.0	Q1
CD74HCT165M96G4	SOIC	D	16	2500	330.0	16.4	6.5	10.3	2.1	8.0	16.0	Q1

TAPE AND REEL BOX DIMENSIONS

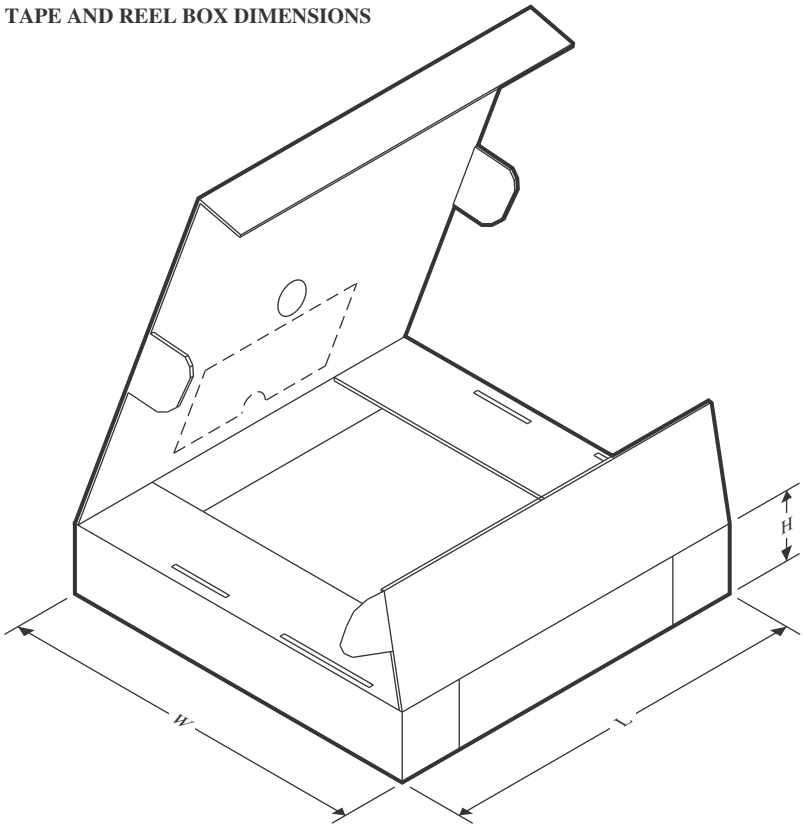

*All dimensions are nominal

Device	Package Type	Package Drawing	Pins	SPQ	Length (mm)	Width (mm)	Height (mm)
CD74HC165M96	SOIC	D	16	2500	340.5	336.1	32.0
CD74HC165M96	SOIC	D	16	2500	340.5	336.1	32.0
CD74HCT165M96	SOIC	D	16	2500	353.0	353.0	32.0
CD74HCT165M96G4	SOIC	D	16	2500	353.0	353.0	32.0

TUBE

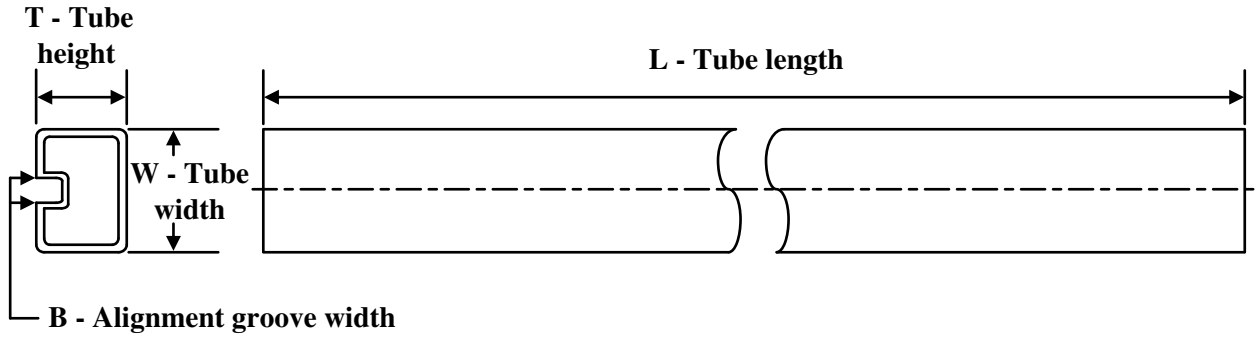

*All dimensions are nominal

Device	Package Name	Package Type	Pins	SPQ	L (mm)	W (mm)	T (µm)	B (mm)
CD74HC165E	N	PDIP	16	25	506	13.97	11230	4.32
CD74HC165E	N	PDIP	16	25	506	13.97	11230	4.32
CD74HC165E.A	N	PDIP	16	25	506	13.97	11230	4.32
CD74HC165E.A	N	PDIP	16	25	506	13.97	11230	4.32
CD74HCT165E	N	PDIP	16	25	506	13.97	11230	4.32
CD74HCT165E	N	PDIP	16	25	506	13.97	11230	4.32
CD74HCT165E.A	N	PDIP	16	25	506	13.97	11230	4.32
CD74HCT165E.A	N	PDIP	16	25	506	13.97	11230	4.32

D (R–PDSO–G16) PLASTIC SMALL OUTLINE

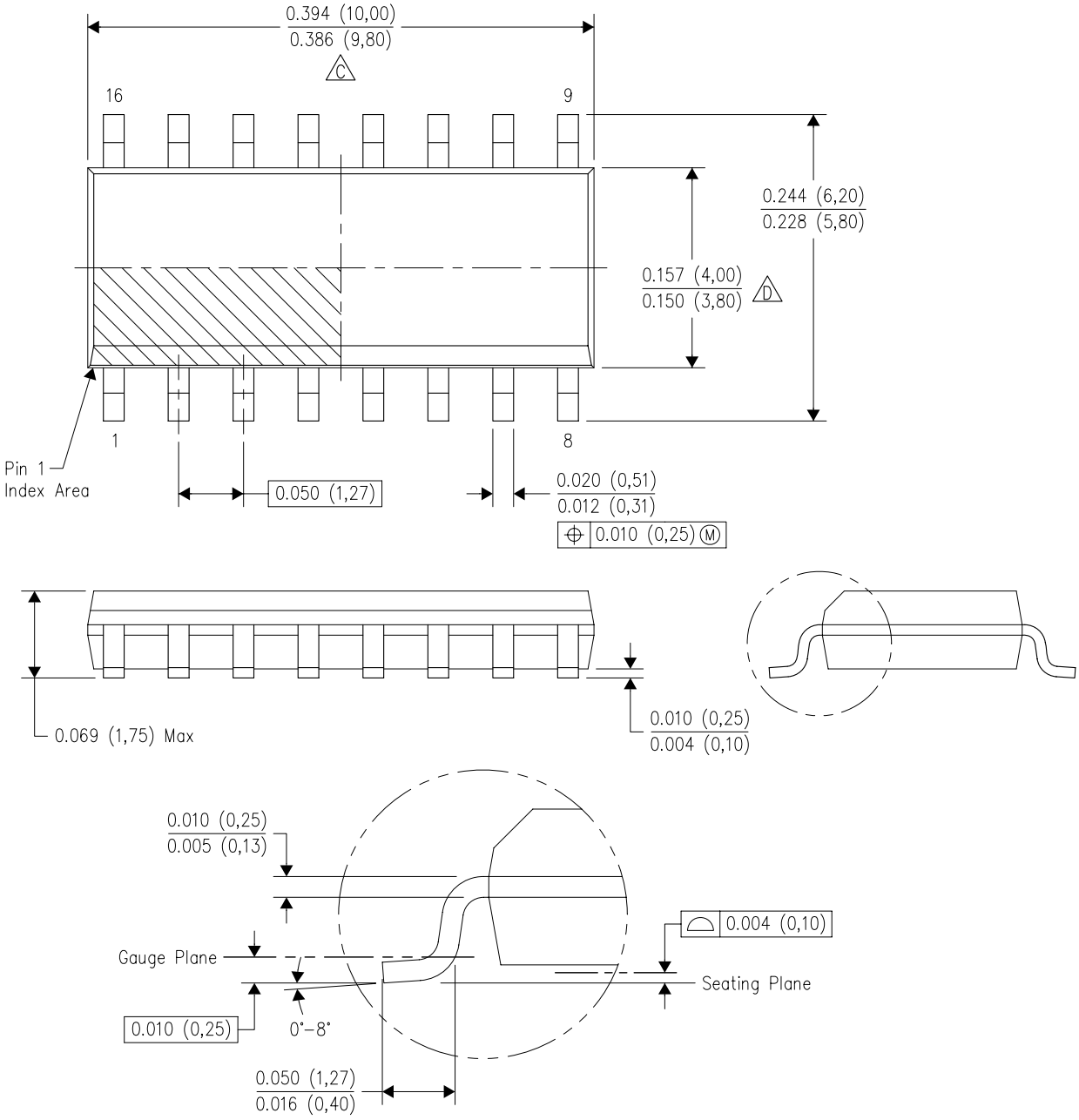

NOTES:
A. All linear dimensions are in inches (millimeters).
B. This drawing is subject to change without notice.
C. Body length does not include mold flash, protrusions, or gate burrs. Mold flash, protrusions, or gate burrs shall not exceed 0.006 (0,15) each side.
D. Body width does not include interlead flash. Interlead flash shall not exceed 0.017 (0,43) each side.
E. Reference JEDEC MS–012 variation AC.

J (R–GDIP–T**)

14 LEADS SHOWN

CERAMIC DUAL IN–LINE PACKAGE

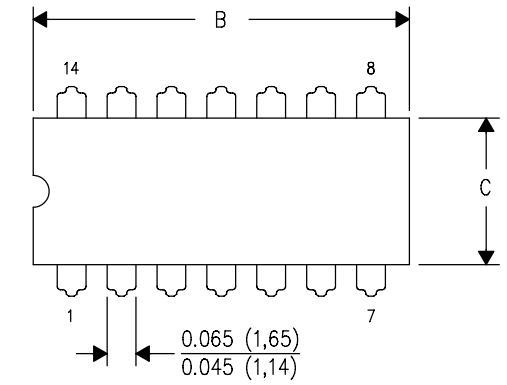

DIM \ PINS **	14	16	18	20
A	0.300 (7,62) BSC	0.300 (7,62) BSC	0.300 (7,62) BSC	0.300 (7,62) BSC
B MAX	0.785 (19,94)	.840 (21,34)	0.960 (24,38)	1.060 (26,92)
B MIN	—	—	—	—
C MAX	0.300 (7,62)	0.300 (7,62)	0.310 (7,87)	0.300 (7,62)
C MIN	0.245 (6,22)	0.245 (6,22)	0.220 (5,59)	0.245 (6,22)

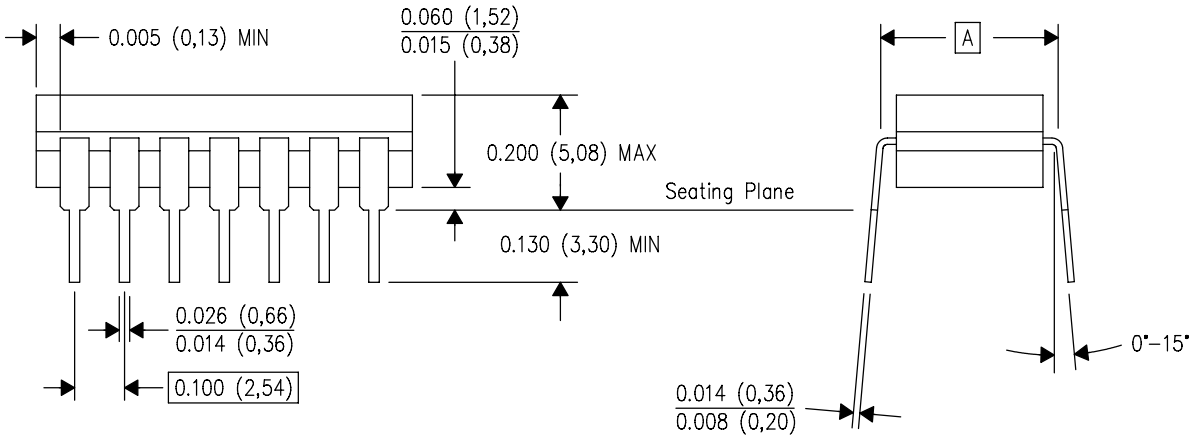

4040083/F 03/03

NOTES:
A. All linear dimensions are in inches (millimeters).
B. This drawing is subject to change without notice.
C. This package is hermetically sealed with a ceramic lid using glass frit.
D. Index point is provided on cap for terminal identification only on press ceramic glass frit seal only.
E. Falls within MIL STD 1835 GDIP1–T14, GDIP1–T16, GDIP1–T18 and GDIP1–T20.

N (R–PDIP–T**)

PLASTIC DUAL–IN–LINE PACKAGE

16 PINS SHOWN

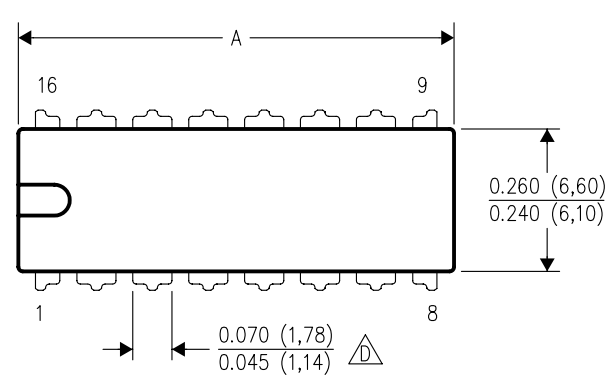

DIM \ PINS **	14	16	18	20
A MAX	0.775 (19,69)	0.775 (19,69)	0.920 (23,37)	1.060 (26,92)
A MIN	0.745 (18,92)	0.745 (18,92)	0.850 (21,59)	0.940 (23,88)
MS–001 VARIATION (C)	AA	BB	AC	AD

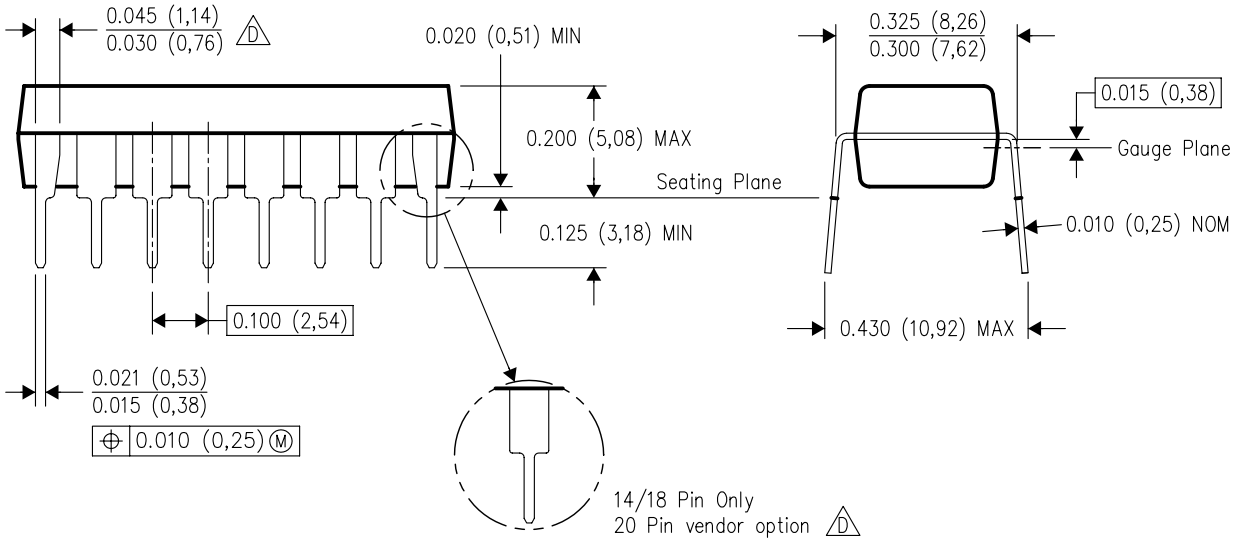

4040049/E 12/2002

NOTES:
A. All linear dimensions are in inches (millimeters).
B. This drawing is subject to change without notice.
C. Falls within JEDEC MS–001, except 18 and 20 pin minimum body length (Dim A).
D. The 20 pin end lead shoulder width is a vendor option, either half or full width.

IMPORTANT NOTICE AND DISCLAIMER

TI PROVIDES TECHNICAL AND RELIABILITY DATA (INCLUDING DATASHEETS), DESIGN RESOURCES (INCLUDING REFERENCE DESIGNS), APPLICATION OR OTHER DESIGN ADVICE, WEB TOOLS, SAFETY INFORMATION, AND OTHER RESOURCES “AS IS” AND WITH ALL FAULTS, AND DISCLAIMS ALL WARRANTIES, EXPRESS AND IMPLIED, INCLUDING WITHOUT LIMITATION ANY IMPLIED WARRANTIES OF MERCHANTABILITY, FITNESS FOR A PARTICULAR PURPOSE OR NON-INFRINGEMENT OF THIRD PARTY INTELLECTUAL PROPERTY RIGHTS.

These resources are intended for skilled developers designing with TI products. You are solely responsible for (1) selecting the appropriate TI products for your application, (2) designing, validating and testing your application, and (3) ensuring your application meets applicable standards, and any other safety, security, regulatory or other requirements.

These resources are subject to change without notice. TI grants you permission to use these resources only for development of an application that uses the TI products described in the resource. Other reproduction and display of these resources is prohibited. No license is granted to any other TI intellectual property right or to any third party intellectual property right. TI disclaims responsibility for, and you fully indemnify TI and its representatives against any claims, damages, costs, losses, and liabilities arising out of your use of these resources.

TI’s products are provided subject to TI’s Terms of Sale, TI’s General Quality Guidelines, or other applicable terms available either on ti.com or provided in conjunction with such TI products. TI’s provision of these resources does not expand or otherwise alter TI’s applicable warranties or warranty disclaimers for TI products. Unless TI explicitly designates a product as custom or customer-specified, TI products are standard, catalog, general purpose devices.

TI objects to and rejects any additional or different terms you may propose.

Copyright © 2026, Texas Instruments Incorporated

Last updated 10/2025