EN: This Datasheet/Document is presented by the manufacturer.

Please visit our website for pricing and availability at www.hestore.hu.

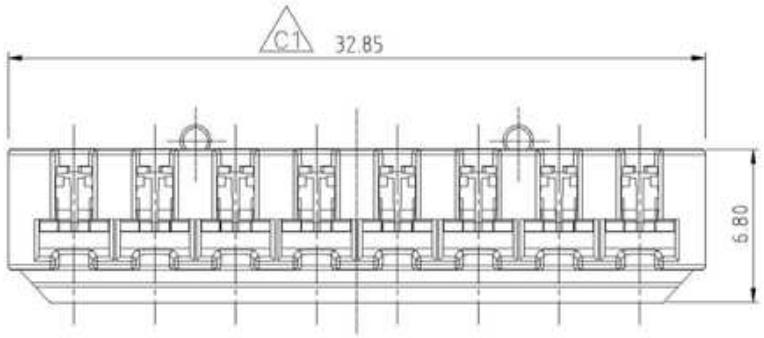

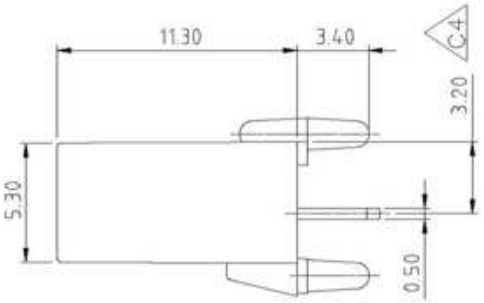

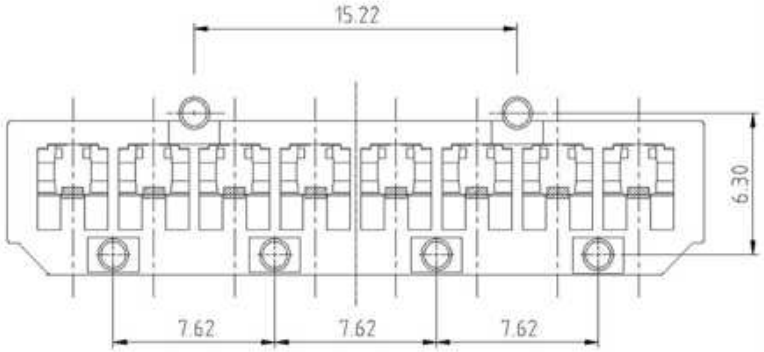

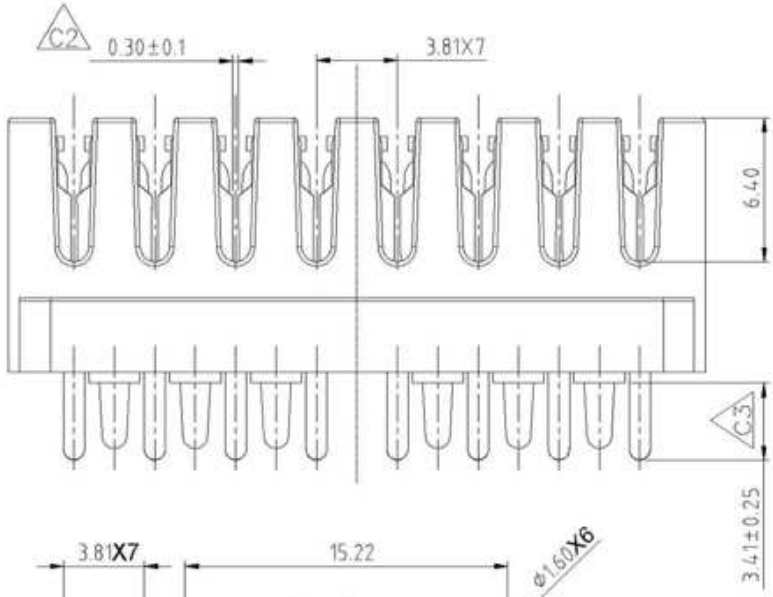

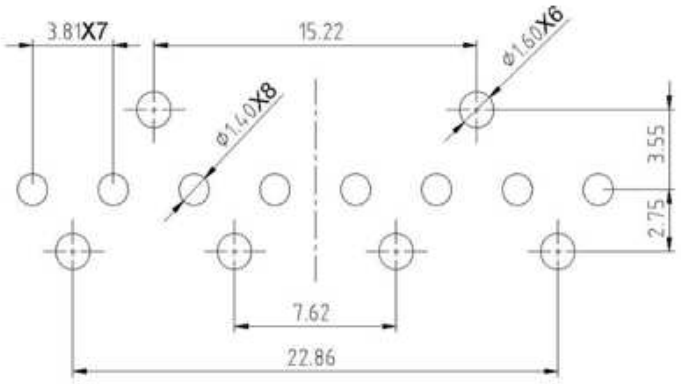

PCB LAYOUT/TOP VIEW

MATERIALS:

PLASTIC HOUSING: ENGINEERING THERMOPLASTIC
FLAMMBILITY RATING UL 94V-0.

COLOUR: GRAY

CONTACTS: PHOSPHOR BRONZE.

PLATING: TIN PLATING OVER NICKEL.

RoHS Compliant

Ninigi

APPD. 核准 A-mei	SCALE 比例 參考	TOLERANCE 容許公差 .0 ±0.38 .00 ±0.25 ANG. ±3°	PART NAME 品名: 3.81mm IDC BLOCK 8P DUAL ROW 110 & KRONE TYPE PHOSPHOR BRANZE TIN PLATING GRAY INSULATOR ROHS LOW-LEAD
DWG. 製圖 Yumi	UNIT 單位 MM	SIZE. 紙張尺寸 A4	PART NO. 料號: IDC381-8-110/KRONE
DATE 制表日 2007/09/13	PAGE 張數 1 OF 1	REV. 版次 A	