EN: This Datasheet/Document is presented by the manufacturer.

Please visit our website for pricing and availability at www.hestore.hu.

Raspberry Pi High Quality Camera
CS Mount
M12 Mount

Published February 2025

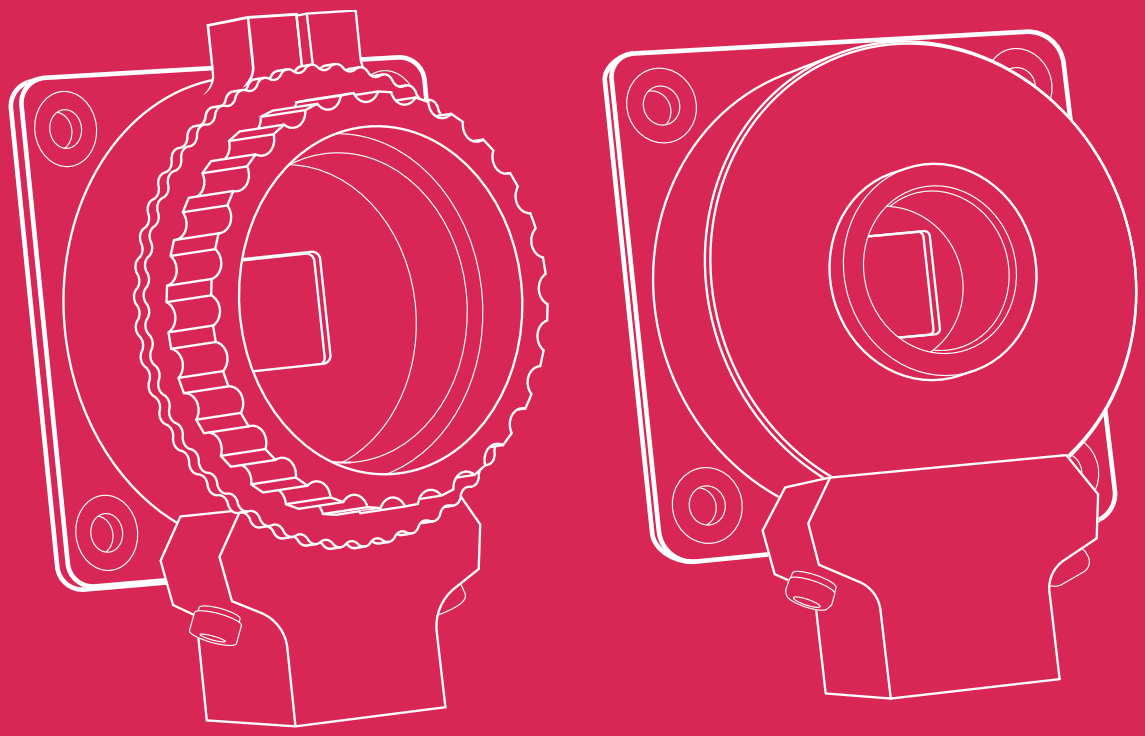

Raspberry Pi Ltd

Overview

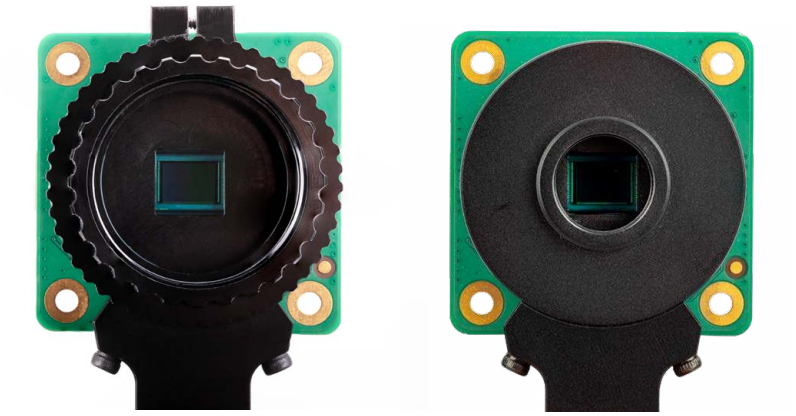

The Raspberry Pi High Quality Camera is an affordable high-quality camera from Raspberry Pi. It offers 12-megapixel resolution and a 7.9mm-diagonal sensor for impressive low-light performance. The M12 Mount variant is designed to work with most interchangeable M12 lenses, and the CS Mount variant is designed to work with interchangeable lenses in both CS- and C-mount form factors (C-mount lenses require the use of the C-CS adapter included with this variant). Other lens form factors can be accommodated using third-party lens adapters.

The High Quality Camera is well suited to industrial and consumer applications, including security cameras, which require the highest levels of visual fidelity and/or integration with specialist optics. It is compatible with all models of Raspberry Pi computer from Raspberry Pi 1 Model B onwards, using the latest software release from raspberrypi.com.[1]

The package comprises a circuit board carrying a Sony IMX477 sensor, an FPC cable for connection to a Raspberry Pi computer, and a milled aluminium lens mount with integrated tripod mount. The CS Mount variant lens mount features a focus adjustment ring, and this variant ships with a C- to CS-mount adapter; the M12 Mount variant ships with three lens locking rings (one required plus two spare).

[1] Excluding early Raspberry Pi Zero models, which lack the necessary FPC connector. Later Raspberry Pi Zero models require an adapter FPC, sold separately.

Specification

Sensor:	Sony IMX477R stacked, back-illuminated sensor
Resolution:	12.3 megapixels
Sensor size:	7.9mm sensor diagonal
Pixel size:	1.55µm × 1.55µm
Output:	RAW12/10/8, COMP8
Back focus length of lens:	2.6mm–11.8mm (M12 Mount variant) 12.5mm–22.4mm (CS Mount variant)
Lens sensor format:	1/2.3” (7.9mm) or larger
IR cut filter:	Integrated [2]
Ribbon cable length:	200mm
Tripod mount:	1/4”-20
Compliance:	FCC 47 CFR Part 15, Subpart B, Class B Digital Device Electromagnetic Compatibility Directive (EMC) 2014/30/EU Restriction of Hazardous Substances (RoHS) Directive 2011/65/EU
Production lifetime:	The Raspberry Pi High Quality Camera will remain in production until at least January 2030

[2] Can be removed to enable IR sensitivity. Modification is irreversible.

Physical specification

CS Mount

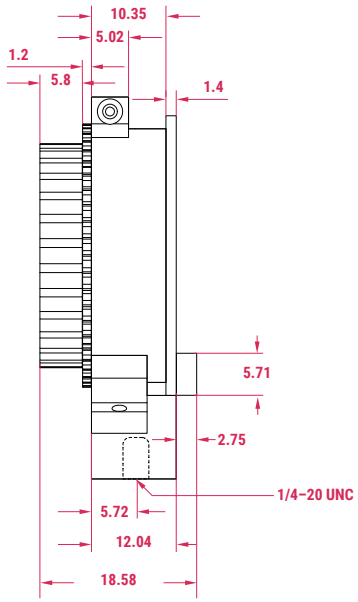

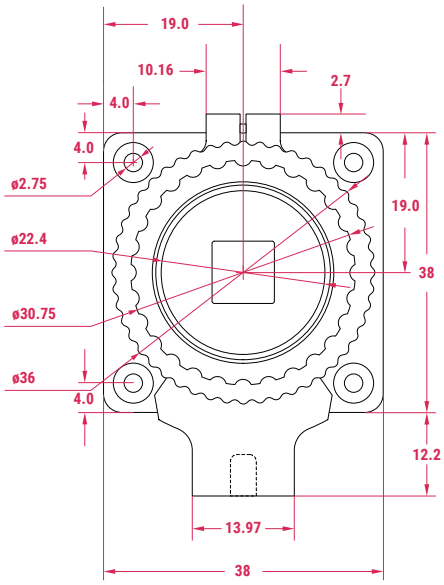

M12 Mount

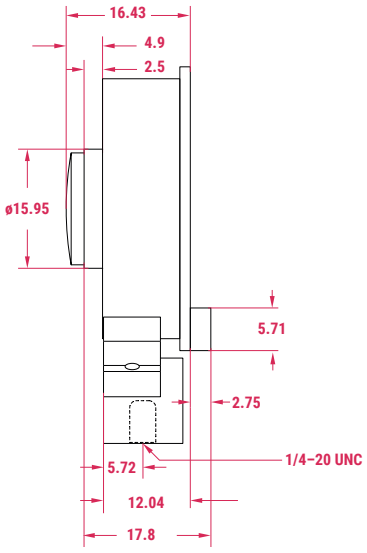

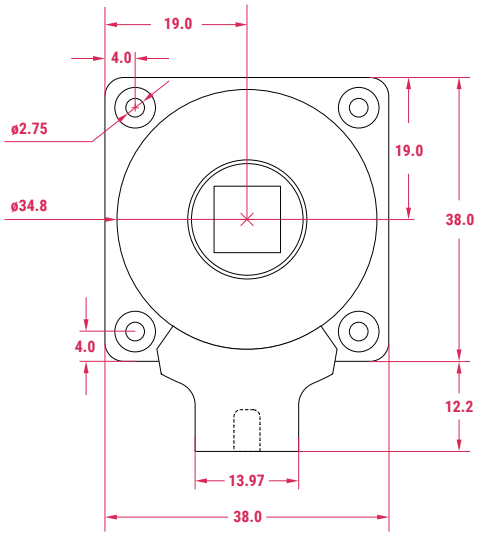

Note: all dimensions in mm

WARNINGS

- This product should be operated in a well ventilated environment, and if used inside a case, the case should not be covered.
- Whilst in use, this product should be firmly secured or should be placed on a stable, flat, non-conductive surface, and should not be contacted by conductive items.
- The connection of incompatible devices to the Raspberry Pi High Quality Camera may affect compliance, result in damage to the unit, and invalidate the warranty.
- All peripherals used with this product should comply with relevant standards for the country of use and be marked accordingly to ensure that safety and performance requirements are met.

SAFETY INSTRUCTIONS

To avoid malfunction or damage to this product, please observe the following:

- Important: Before connecting this device, shut down your Raspberry Pi computer and disconnect it from external power.
- If the cable becomes detached, first pull forward the locking mechanism on the connector, then insert the ribbon cable ensuring that the metal contacts face towards the circuit board, and finally push the locking mechanism back into place.
- This device should be operated in a dry environment at 0–50°C.
- Do not expose to water or moisture, or place on a conductive surface whilst in operation.
- Do not expose to heat from any source; the Raspberry Pi High Quality Camera is designed for reliable operation at normal ambient temperatures.
- Store in a cool, dry location.
- Avoid rapid changes of temperature, which can cause moisture to build up in the device, affecting image quality.
- Take care not to fold or strain the ribbon cable.
- Take care when screwing in parts or fitting a tripod. A cross-thread can cause irreparable damage and void the warranty.
- Take care whilst handling to avoid mechanical or electrical damage to the printed circuit board and connectors.
- Whilst it is powered, avoid handling the printed circuit board, or handle it only by the edges, to minimise the risk of electrostatic discharge damage.

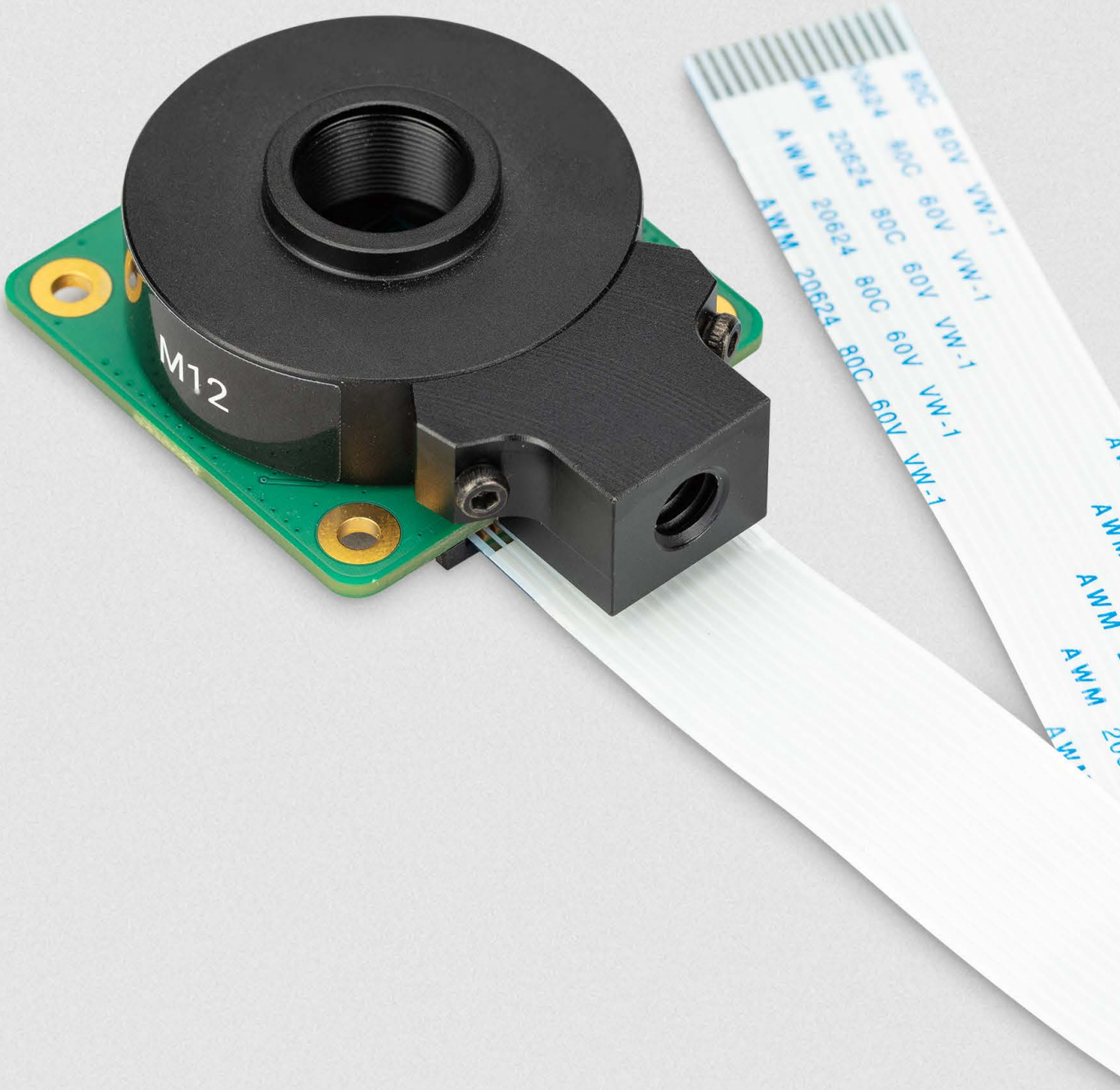
M12
AWM 20624 80C 60V VW-1



Raspberry Pi is a trademark of Raspberry Pi Ltd