EN: This Datasheet/Document is presented by the manufacturer.

Please visit our website for pricing and availability at www.hestore.hu.

TI Designs

Current Controlled Driver for 24-V DC Solenoid With Plunger Fault Detection

TI Designs

TI Designs provide the foundation that you need including methodology, testing and design files to quickly evaluate and customize the system. TI Designs help *you* accelerate your time to market.

Design Resources

TIDA-00289	Tool Folder Containing Design Files
DRV110	Product Folder
OPA4170	Product Folder
TLV271	Product Folder
DRV5023	Product Folder

TI E2E™ Community

ASK Our E2E Experts
WEBENCH® Calculator Tools

Design Features

- Uses DRV110Power-Saving Solenoid Current Controller With Integrated Supply Regulation
- Controls Solenoid Current During Peak and Hold Mode for Lower Power and Thermal Dissipation Using PWM Technique With External MOSFET
- Adjusts Peak Current, Keep Time at Peak Current, Hold Current, and PWM Clock Frequency Through External Components
- Detects Faulty Solenoids Using Back-EMF Technique
- Has Automatic Switchover from Peak-to-Hold Current Mode at the End of Plunger Movement
- Can Optionally Interface Hall Sensor to Detect Plunger Position and Switch-to-Hold Mode
- Activates Alarm Signal When Detecting Faulty Plunger Movement, Undervoltage, and Controller Over Temperature
- Provides Logic EN Pin for the Programmable Logic Controller (PLC) to Activate and Deactivate the Solenoid
- Provides 0- to 10-V Analog Output, Scaled to Solenoid Current to Interface With the PLC
- Complies with EN55011 Class A Conducted Emission Limits

Featured Applications

- Electromechanical Driver: Solenoids, Valves, and Relays

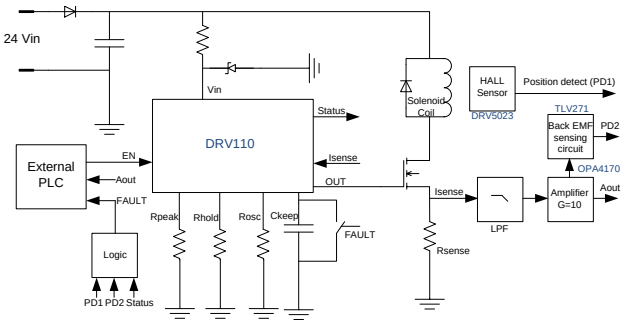

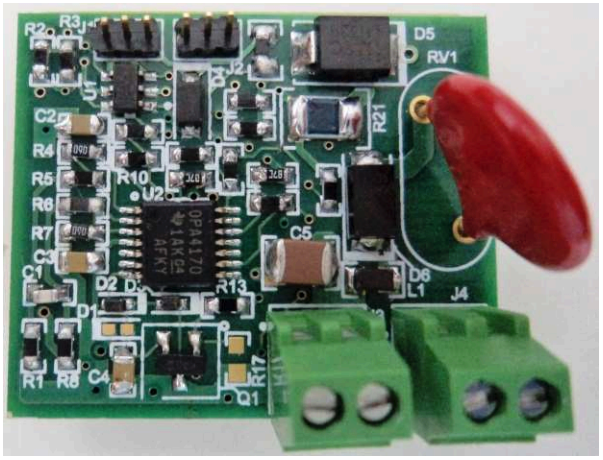

All trademarks are the property of their respective owners.

Copyright © 2014, Texas Instruments Incorporated

An IMPORTANT NOTICE at the end of this TI reference design addresses authorized use, intellectual property matters and other important disclaimers and information.

1 System Description

Overcurrent protection devices such as circuit breakers protect equipments from drawing excessive current. These protective devices are designed to keep the current flow in a circuit at a safe level to prevent the circuit conductors from overheating. Relays are integral parts of any switchgear equipment as they connect and disconnect the mains to and from the protected equipment through coil energization and contacts. Contactors are primarily used to make (connect) or break (disconnect) contact in the conducting element. Contactors are used in systems where the break-and-make connection is either frequent or unchanged for long periods of time. Direct online starters are one such example of contactors. Applications such as refrigeration, air conditioning and hydraulic systems use valves to control the flow of fluid and air.

Valves, relays, and contactors all use electromechanical solenoids for their operation. Solenoid coils are rated to operate from 12-V to 24-V DC and 110-V to 230-V AC systems with a power consumption ranging from 8 to 20 W. Solenoid coils need more current only during actuation; in steady state, the coils need approximately 30% of its nominal current. Solenoid coils operating with nominal current consistently raise the temperature in the coil due to higher power dissipation. This reference design provides a solution to control the solenoid current as well as monitor the proper operation of the plunger in valves using pulse-width modulation-based (PWM) controllers along with a Back-EMF sensing circuit.

1.1 Characteristics of Solenoid Coils

Electromechanical solenoids consist of an electromagnetically inductive coil wound around a movable steel or iron slug called the armature, or plunger. The coil is shaped such that the armature can be moved in and out of its center, altering the coil's inductance as well as becoming an electromagnet. The armature provides a mechanical force to activate the control mechanism, for example opening and closing of a valve.

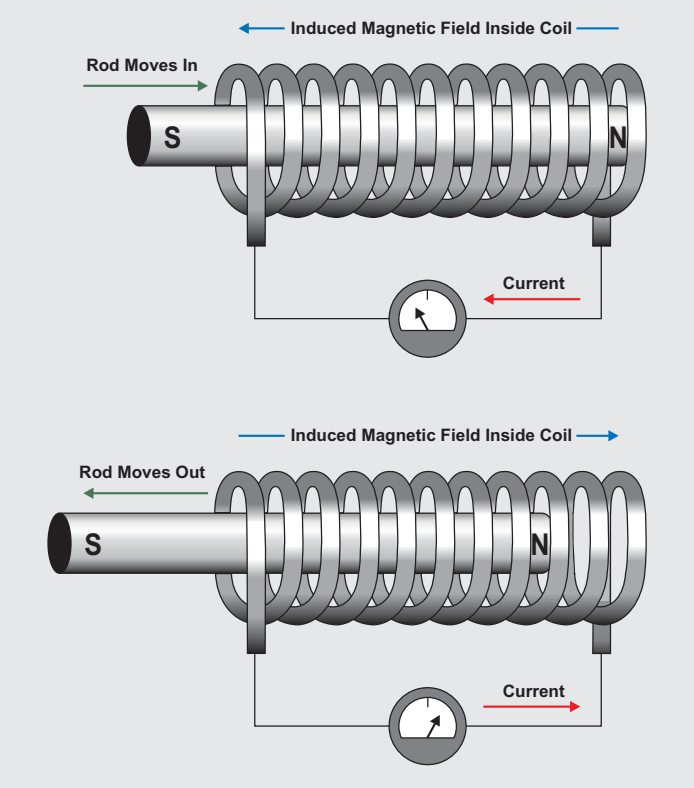

Figure 1. Working of a Solenoid

Copyright © 2014, Texas Instruments Incorporated

A main electrical characteristic of a solenoid is that of an inductor that opposes any change in current. This characteristic is why current does not immediately reach a maximum level when a solenoid is energized. Instead, the current rises at a steady rate until it is limited by the DC resistance of the solenoid. An inductor (in this case a solenoid) stores energy in the form of a concentrated magnetic field. Whenever current is present in a wire or conductor, a magnetic field, however small, is created around the wire. With the wire wound into a coil, such as in a solenoid, the magnetic field becomes very concentrated. This electromagnet can control a mechanical valve through an electrical signal. As soon as the solenoid is energized, the current increases, causing the magnetic field to expand until it becomes strong enough to move the armature. The armature movement increases the concentration of the magnetic field as the armature's own magnetic mass moves farther into the magnetic field. Remember, a magnetic field changing in the same direction of the current creating it induces an opposing voltage into the windings. Because the magnetic field quickly expands when the armature strokes, the field causes a brief reduction in the current through the solenoid windings. After the armature strokes, the current continues on its normal upward path to its maximum level. A typical current waveform in shown in Figure 2. Notice the prominent dip in the rising portion of the current waveform.

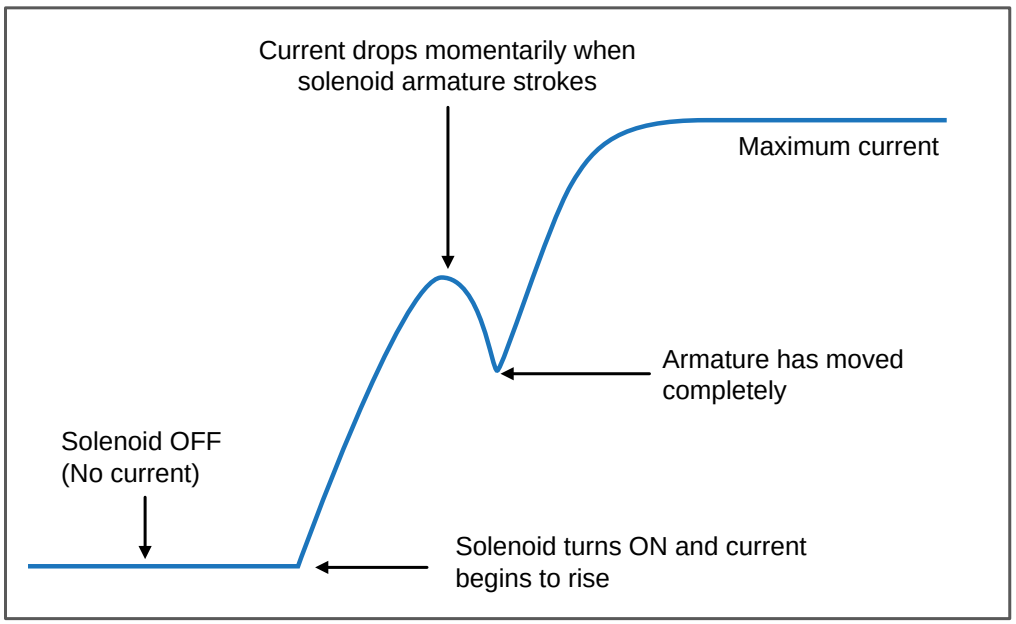

Figure 2. Typical Solenoid Current

Copyright © 2014, Texas Instruments Incorporated

1.2 Driving the Solenoid Coil: Voltage or Current Drive?

As mentioned earlier, the armature of a solenoid provides a mechanical force to activate the control mechanism. The force applied to the armature is proportional to the coil's change in inductance with respect to the armature's change in position. The electromagnetic force of a solenoid directly relates to the current. Traditionally, a voltage drive powers the solenoid coils; Therefore, the coil consumes a continuous power. A negative effect of this power consumption is the heating of the coil and, in turn, the entire relay. The coil temperature is a result of many factors: ambient temperature, self-heating due to the coil's power consumption (V × I), heating induced by the contact system, and other heat sources such as components in the vicinity of the relay. Due to coil heating, the coil resistance increases. The resistance at elevated temperature is expressed by Equation 1:

$$R_{Coil_T°C} = R_{Coil_20°C}\left[1 + k_{R_T}(T°C - 20°C)\right] \quad (1)$$

where

- $R_{Coil_20°C}$ is the 20°C value for resistance
- k_{R_T} is the thermal coefficient of copper (= 0.00404 per °C)

Typically given in the datasheet of a solenoid coil, $R_{Coil_20°C}$ can calculate the worst-case coil resistance at high temperatures.

During circuit design, calculate for worst-case conditions such as the highest possible coil temperature at the operating pick-up voltage. Another point to note is that for a given coil, the pick-up current remains the same at any condition. The pick-up current depends on the pick-up voltage and the coil resistance ($I_{Pick\text{-}up} = V_{Pick\text{-}up} / R_{Coil}$). Most relay coils are made of copper wire. Due to the increase in coil temperature, the coil resistance increases as per Equation 1. Therefore, the pick-up voltage for the hot coil must be higher to generate the required pick-up current. For example, if a 12-V DC relay's pick-up voltage is 9.6-V DC and the coil resistance is 400 Ω at 20°C, then $I_{Pick\text{-}up}$ = 24 mA. When the coil temperature increases to 40°C, the coil resistance increases to 432 Ω. Then the pick-up voltage is 10.36-V DC. (The pick-up current remains the same.) In other words, an increase in temperature by 20°C increases the pick-up voltage by 0.76-V DC. In relays operating with higher duty cycles, the pick-up voltage increases slightly for each successive cycle due to the coil's temperature rise (see Figure 3).

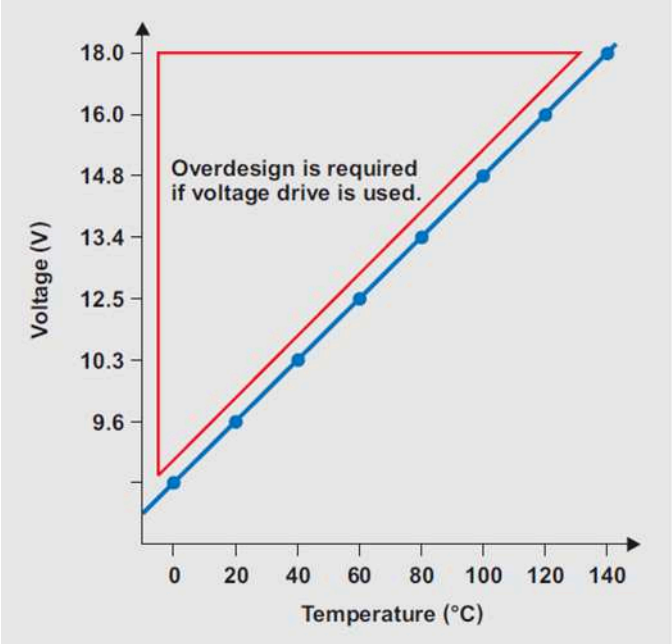

Figure 3. Overdesign for Solenoid Voltage Drive

In short, voltage drive forces overdesign because current varies with variations in coil resistance, temperature, supply voltage, and so on. Using current drive is optimal for many devices with solenoids.

Copyright © 2014, Texas Instruments Incorporated

1.3 Optimizing Power Consumption

Closing a relay or valve requires a lot of energy. The instantaneous current that activates the solenoid actuator, called the peak current (I_{PEAK}), can be high. However, once the relay or valve is closed, the current required to keep it in that condition, called the hold current (I_{HOLD}), is significantly less than the peak current. When voltage drive is used, the current flowing through the solenoid coil is continuous and higher than when current drive is used. Unlike the voltage drive, the current drive requires no margin for parameter changes caused by temperature or solenoid-resistance variations. This design requires separate values for peak current, which may be in the range of amperes, and steady-state hold current, which may be only one-fifth of the peak current value.

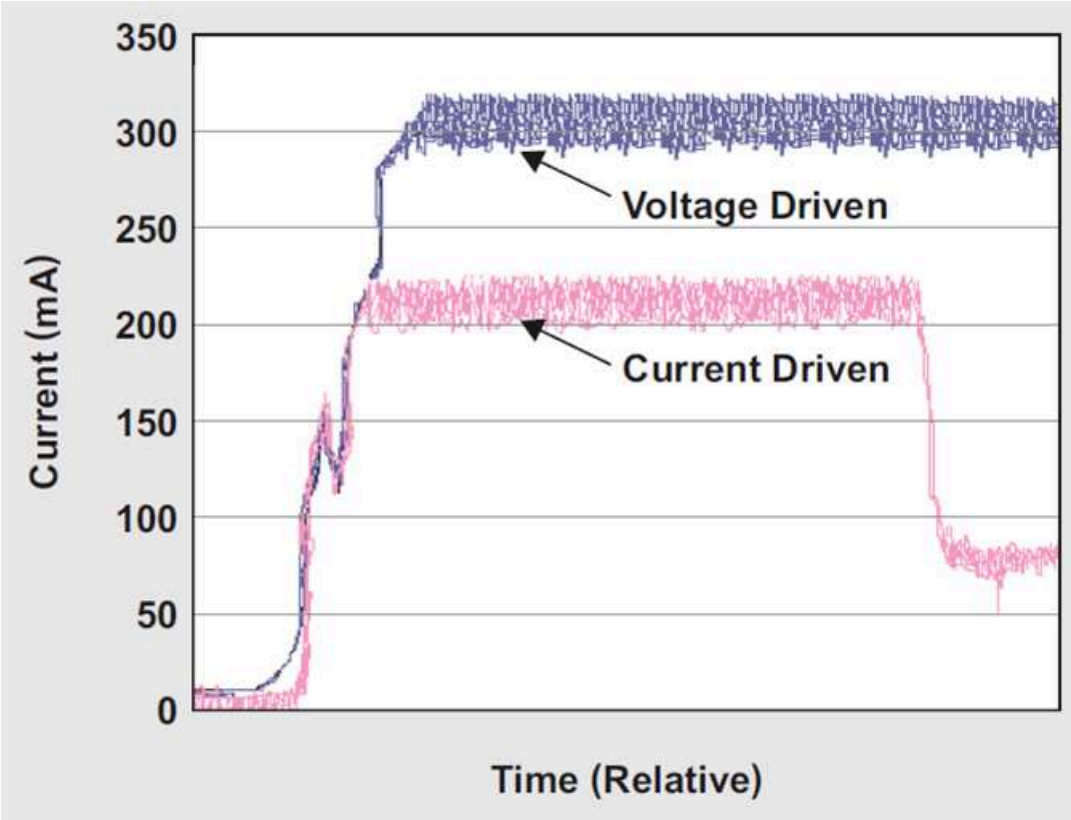

Figure 4. Solenoid Current With Voltage and Current Drives

Copyright © 2014, Texas Instruments Incorporated

1.4 Current Control Implementations for Driving a Solenoid Coil

Traditionally, the solenoid coil is controlled through the general-purpose I/Os (GPIOs) of the microcontroller (MCU) through an external BJT or MOSFET. A newly developed driving system uses pulse-width modulation (PWM) to control the current waveform. The duty cycle of the PWM determines the average current through the coil. The DRV110-based system regulates the current with a well-controlled waveform to reduce power dissipation. After the initial ramping, the solenoid current is kept at a peak value to ensure correct operation, after which the current is reduced to a lower hold level to avoid thermal problems and reduce power dissipation. The graphs given in Figure 5 compares the operation of a conventional driver with that of the DRV110.

NOTE: Other methods reduce voltage but need to have an overhead to guarantee that the hold current is always maintained across any temperature.

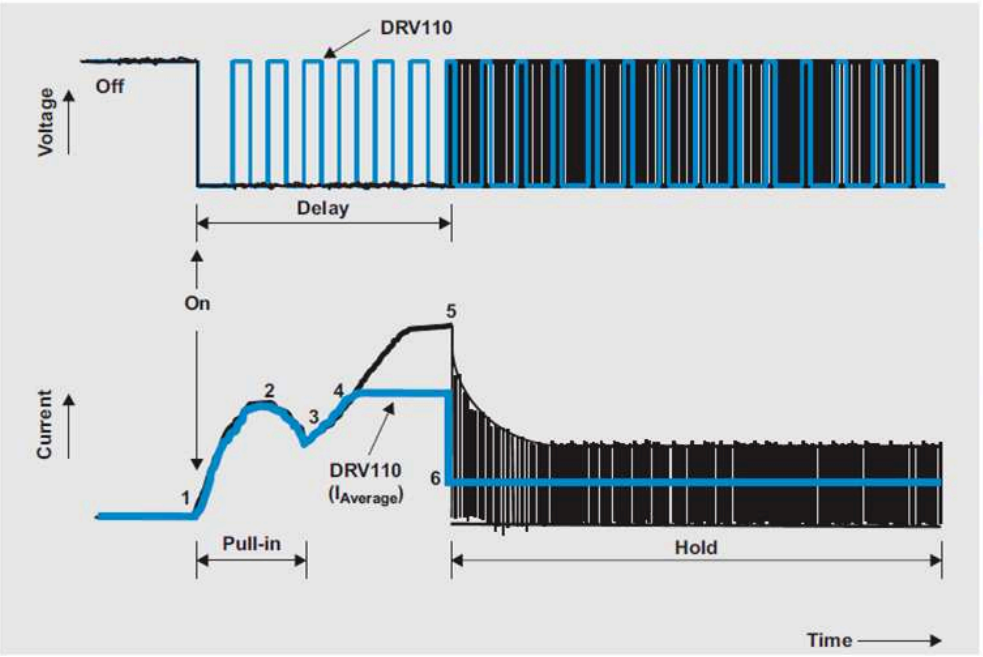

Figure 5. Operation of Conventional Driver versus DRV110

Copyright © 2014, Texas Instruments Incorporated

2 Design Features

The primary objective of this design is to provide a current-controlled drive for solenoid or valve excitation with optimum power consumption using a minimum number of components. This objective leads to reduced power loss in solenoid thereby increasing the durability of the solenoid.

2.1 Design Requirements

The system-level requirements for this design include:

- Able to operate the solenoid from an input voltage 24-V DC ±20%
- A PWM current controller to scale the current drawn by the solenoid during excitation peak and hold periods.
- Able to program the peak current, KEEP time at peak current, hold current, and PWM clock frequency through external components
- An enable digital input to control the driver from a PLC or control unit
- A signal conditioning and amplification circuit to provide 0- to 10-V analog output, scaled to solenoid current to interface with PLC
- A Hall sensor to detect the complete movement of the plunger
- A control logic circuit to detect proper movement of the plunger

Copyright © 2014, Texas Instruments Incorporated

3 Block Diagram

The main parts of the design include the DRV110 controller, a suitable MOSFET, analog op-amp circuits, and a digital input to operate the DRV110. Operate the solenoid coil either by applying input voltage or through a digital input signal (EN). The PLC units can controls the operation of the DRV110 through EN pin.

The OUT pin of DRV110 gives the gate pulses to the external MOSFET.

R_{PEAK} and R_{HOLD} resistors along with R_{SENSE} set the peak and hold current references of the DRV110. ROSC determines the switching frequency, and C_{KEEP} determines the duration of peak current period.

The solenoid current is sensed through the sense resistor R_{SENSE}. The sensed solenoid current is filtered by a low-pass filter and fed to the op-amp OPA4170 to generate A_{OUT}.

The Back-EMF sensing circuit detects the position of the plunger using Back-EMF technique. The Hall sensor DRV5023 can also detect the position of the plunger.

The status output pin of the DRV110 is a logic signal that corresponds undervoltage and over temperature detection, which is then OR'ed with the signal from plunger position detection (Back-EMF sensing) circuit and the Hall sensor output to generate the fault signal.

C_{KEEP} will be shorted by BJT until the plunger has moved to its intended position, after which C_{KEEP} can charge there by transitioning from peak current to hold current.

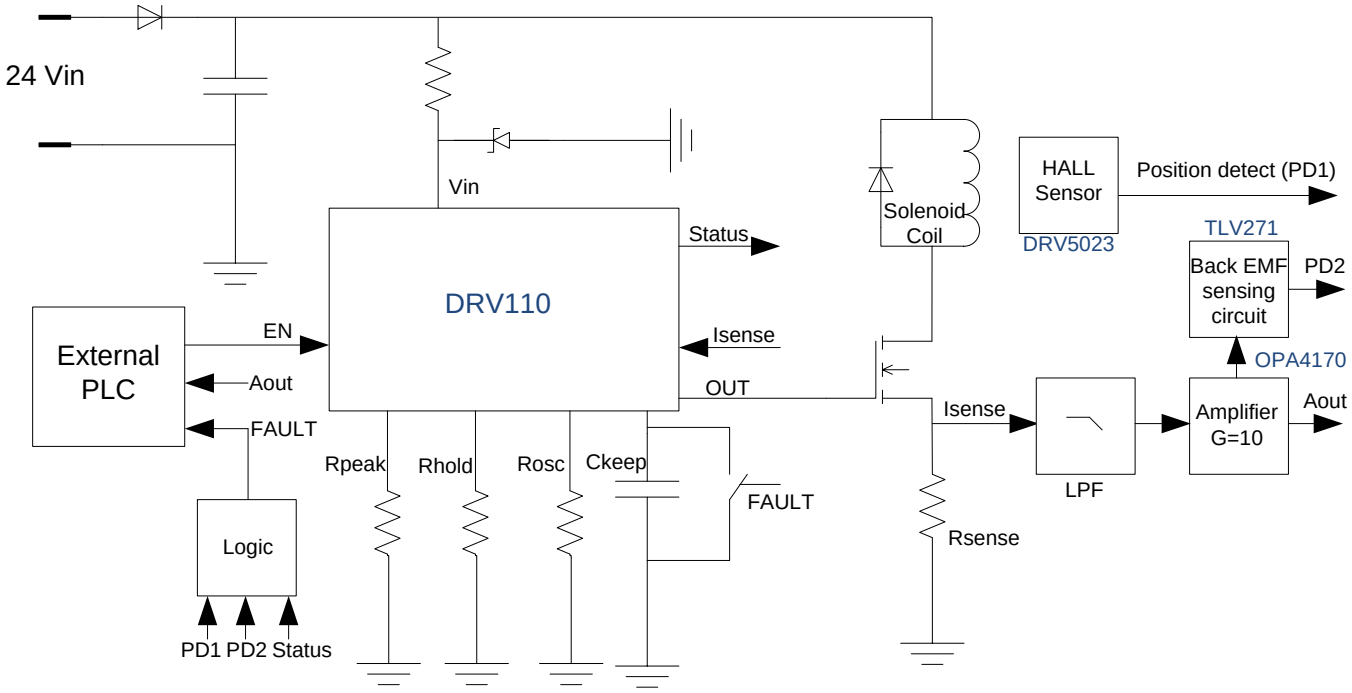

Figure 6. Block Diagram of Solenoid Driver Using DRV110

Copyright © 2014, Texas Instruments Incorporated

4 Component Selection and Circuit Design

This reference design features the following devices:

- DRV110A
- TLV271
- OPA4170
- DRV5023

For more information on each of these devices, see their respective product folders at www.ti.com or click on the links for the product folders in Design Resources.

4.1 Component Selection

4.1.1 DRV110A

The DRV110 is a PWM current controller for solenoids. The device regulates the current with a well-controlled waveform to reduce power dissipation. The solenoid current is ramped up fast to ensure opening of the valve or relay. After the initial ramping, the solenoid current is kept at peak value to ensure the correct operation, after which the current is reduced to a lower hold level to avoid thermal problems and reduce power dissipation.

The peak current duration is set with an external capacitor. The current ramp peak and hold levels, as well as PWM frequency, can be set independently with external resistors. External setting resistors can also be omitted if the default values for the corresponding parameters are suitable for the application.

The DRV110 limits its own supply at V_{IN} to 15 V, which is also the gate drive voltage of an external switching device (for example, a MOSFET that is driving the solenoid load). If a lower gate drive voltage is required, use an external supply of at least 6 V.

Features:

- Drives an external MOSFET with PWM to control solenoid current using external sense resistor
- Ramps up solenoid current quickly to guarantee activation
- Reduces solenoid current in hold mode for lower power and thermal dissipation
- Regulates internal supply voltage to 15 V using an external pull-up resistor

4.1.2 TLV271

The TLV271 is a 3-MHz rail-to-rail dual op-amp available in a 5-pin SOT23 package. This device can work from a wide supply voltage from 2.7-V to 16-V DC. The CMOS inputs enable use in a high-impedance sensor interface. The low supply current of 550 µA per channel and low offset voltage also make this device very suitable for the design.

The TLV271 is fully specified for 5-V and ±5-V supplies. The maximum recommended supply voltage is 16 V, which allows the devices to be operated from a variety of rechargeable cells (±8-V supplies down to ±1.35 V). The TLV271 has a slew rate of 2.4 V/µs.

Copyright © 2014, Texas Instruments Incorporated

4.1.3 OPA4170

The OPAx170 are a family of 36-V, single-supply, low-noise op-amps that feature micro packages with the ability to operate on supplies ranging from 2.7 V (±1.35 V) to 36 V (±18 V).

The very low drift of these devices makes them suitable for operating in a wide range of industrial environments. The devices have a good bandwidth of 1.2 MHz, a low offset, and a very low quiescent current of 110 µA per channel.

The OPAx170 family offers good offset, drift, and bandwidth with a low quiescent current. The single, dual, and quad versions all have identical specifications for maximum design flexibility. Unlike most op-amps, which are specified at only one supply voltage, the OPAx170 family of op-amps is specified from 2.7 V to 36 V. Input signals beyond the supply rails do not reverse the phase. The OPAx170 family is stable with capacitive loads up to 300 pF. The input can operate 100 mV below the negative rail and within 2 V of the positive rail for normal operation. These devices can operate with full rail-to-rail input 100 mV beyond the positive rail, but with reduced performance within 2 V of the positive rail.

The OPAx170 is available in SOT553, SOT23-5, and SO-8 packages. The dual OPA2170 comes in VSSOP-8, MSOP-8, and SO-8 packages. The quad OPA4170 is offered in TSSOP 14 and SO-14 packages. The OPAx170 op-amps are specified from –40°C to 125°C.

4.1.4 DRV5023

The DRV5023 is a chopper-stabilized Hall effect sensor that offers a magnetic sensing solution with superior sensitivity stability over temperature and integrated protection features. The device is available in the high sensitivity option of 6.9 / 3.3 mT, which will be able to detect the solenoid flux linkage when the plunger is in the closed position. When the applied magnetic flux density exceeds the operate point (B_{OP}) threshold, the DRV5023 open drain output goes low. The output stays low until the field decreases to less than the release point (B_{RP}), and then the output goes to high impedance. The output current sink capability is 30 mA. A wide-operating voltage range from 2.5 to 38 V with reverse polarity protection up to –22 V makes the device suitable for a wide range of industrial applications. Internal protection functions are provided for reverse supply conditions, load dump, and output short circuit or overcurrent.

Copyright © 2014, Texas Instruments Incorporated

4.2 Circuit Design

4.2.1 Input Supply and Voltage Regulation for DRV110

Figure 7 shows the input supply and voltage regulation circuit for the DRV110. J4 is the input connector for the 24-V DC input supply. A protective fuse is used at the input followed by the metal oxide varistor for surge protection. The diode D6 is used for reverse polarity protection. The inductor L1 and capacitor C5 form the power filter. R23, R21, and D5 create the network to regulate the voltage of the DRV110.

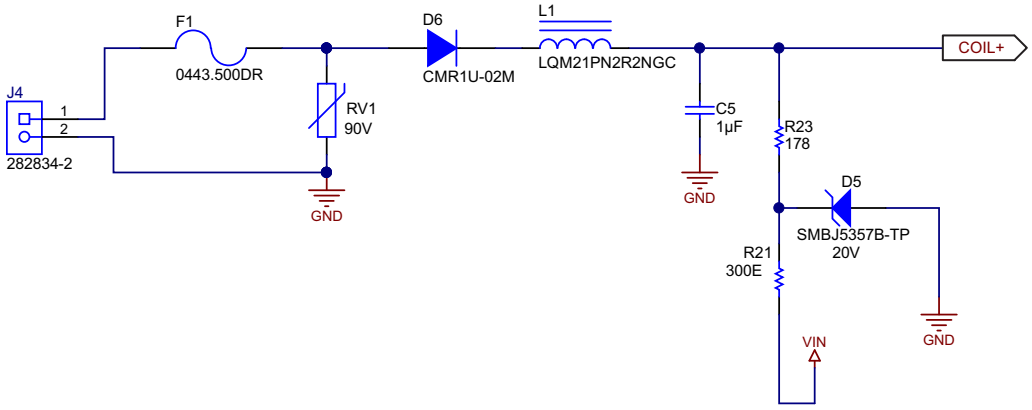

Figure 7. Input Supply and Voltage Regulation Circuit for DRV110

Copyright © 2014, Texas Instruments Incorporated

4.2.1.1 Calculating the Current Limiting Resistor to Regulate V

The DRV110 can regulate V_{IN} voltage to 15 V from a higher external supply voltage, by an internal bypass regulator that replicates the function of an ideal Zener diode. This requires that the supply current is sufficiently limited by an external resistor between external supply and the V_{IN} pin. An external capacitor connected to the V_{IN} pin, C8 is used to store enough energy to charge the external switch gate capacitance at the OUT pin. The current limiting resistor (R_S) size to keep quiescent current of DRV110 less than 1 mA can be calculated by Equation 2:

$$R_S = \frac{V_{S_MIN(DC)} - 15\ V}{1\,mA + I_{GATE_AVG} + I_{AUX}}$$

where

- $V_{s,minDC}$ is the minimum DC supply voltage
- $I_{Gate,AVG}$ is the average gate current required for driving the MOSFET in milli-ampere
- I_{AUX} is the current drawn by all the other circuits, which derive current from V_{IN} (2)

In the circuit, additional Zener D5 is provided externally to limit the power dissipation in the internal bypass regulator of the DRV110. D5 is a 20-V Zener. R23 then lowers the voltage to 20 V, and R21 lowers the voltage to 15 V.

Calculating $I_{Gate,\ AVG}$

The selected switching device Q4 has a total gate charge requirement of QG = 7.3 nC at 10 V (VGS).

Gate voltage, V_G	= 15 V
Switching frequency, f_{sw}	= 20 kHz
Total gate capacitance, C_{GATE}	= QG / VGS = 0.73 nC
Average Gate power, P_{GATE}	$= 0.5 \times C_{GATE} \times V_G^2 \times f_{sw}$ (3)
	= 1.64 mW
Average gate current, $I_{Gate,\ AVG}$	$= P_{GATE} / V_G$ = 0.11 mA

Calculating I_{AUX}

The devices that draw power from the regulated voltage V_{IN} include the op-amps, the Hall sensor, and the entire resistive divider network. Considering the supply current of these devices, I_{AUX} is approximately 8 mA.

Calculating the maximum value of R_S

In the reference design, RS = R23 + R21, and the minimum input voltage = 19.4 V, Therefore, R_S = (19.4 – 15) / (1 + 0.11 + 8) = 480 Ω.

The Zener diode D2 clamps the voltage to 20 V using the series resistor R23. At a rated input voltage of 24-V DC, the Zener diode D2 regulates the voltage to 20 V. Then the drop across R23 is 4 V and across R21 is 5 V. This drop ensures that R23 takes most of the loads due to an increase in input voltage.

The above design values at the rated input voltage of 24-V DC gives the ratio R21/R23 = 5/4, leading to R21 = 300 Ω and R23 = 178 Ω.

These values ensure that with the increase in input voltage, the current sinking of the DRV110 remains constant. The maximum power consumption in R21 = (Voltage across R21)^2 / R21. The suitable package has been selected for these resistors for proper power dissipation without damage.

Copyright © 2014, Texas Instruments Incorporated

4.2.2 DRV110 Circuit and Solenoid Current Control Circuit

Figure 8 shows the DRV110 circuit, the solenoid connections, and the power switching device.

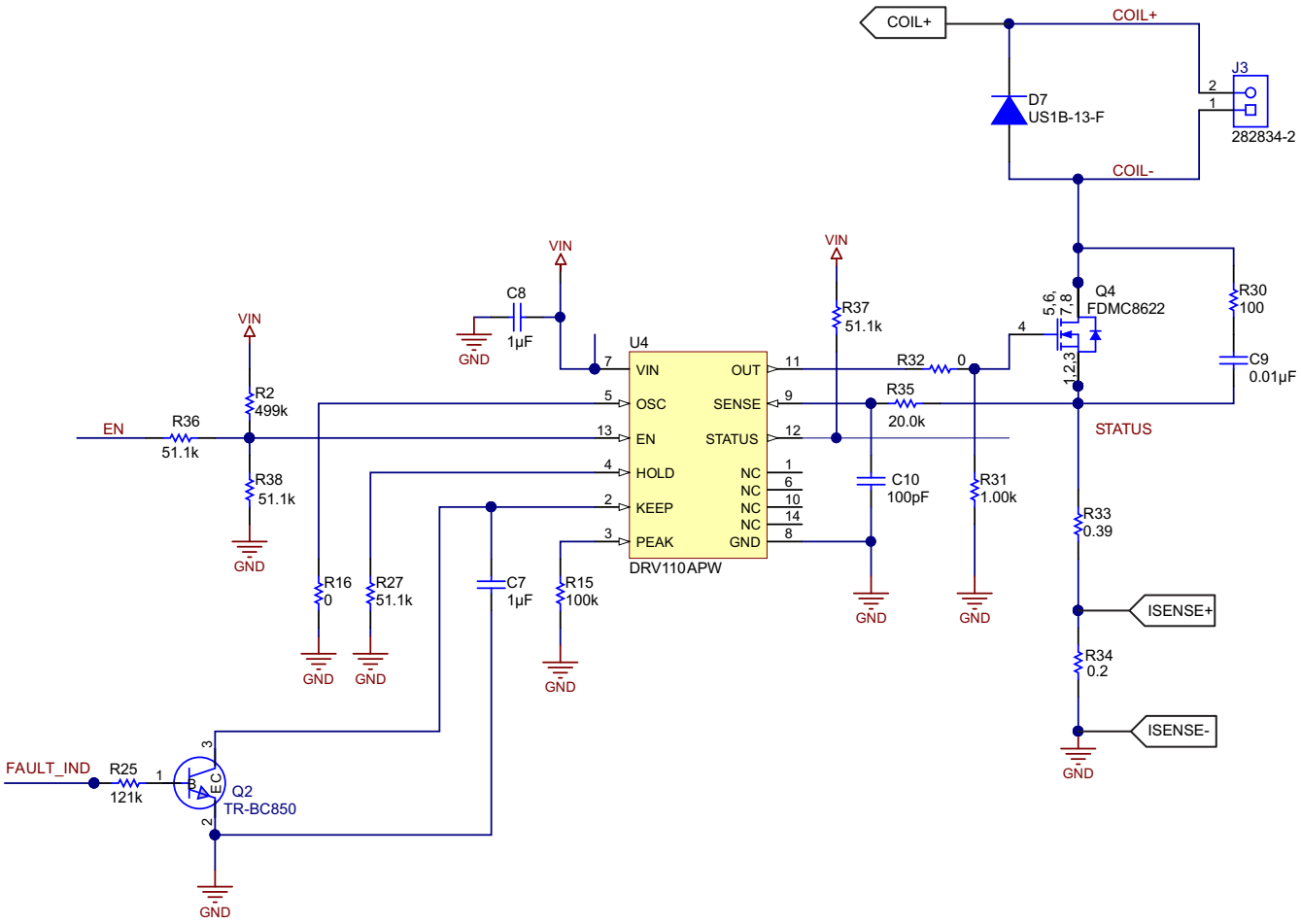

Figure 8. DRV110 Solenoid Current Control Circuit

J3 is the connector for solenoid terminals. D7 is the freewheeling diode. Q4 is the power switching device. The switch current is sensed by R33 and R34.

Copyright © 2014, Texas Instruments Incorporated

4.2.2.1 ENABLE Signal

The DRV110 controls the current through the solenoid as shown in Figure 9. Activation starts when the EN pin voltage is pulled high either by an external driver or internal pull-up. In the beginning of activation, The DRV110 allows the load current to ramp up to the peak value I_{PEAK} and regulates it at the peak value for the time, t_{KEEP}, before reducing it to I_{HOLD}. The load current is regulated at the hold value as long as the EN pin is kept high. The initial current ramp-up time depends on the inductance and resistance of the solenoid. Once the EN pin is driven to GND, the DRV110 allows the solenoid current to decay to zero.

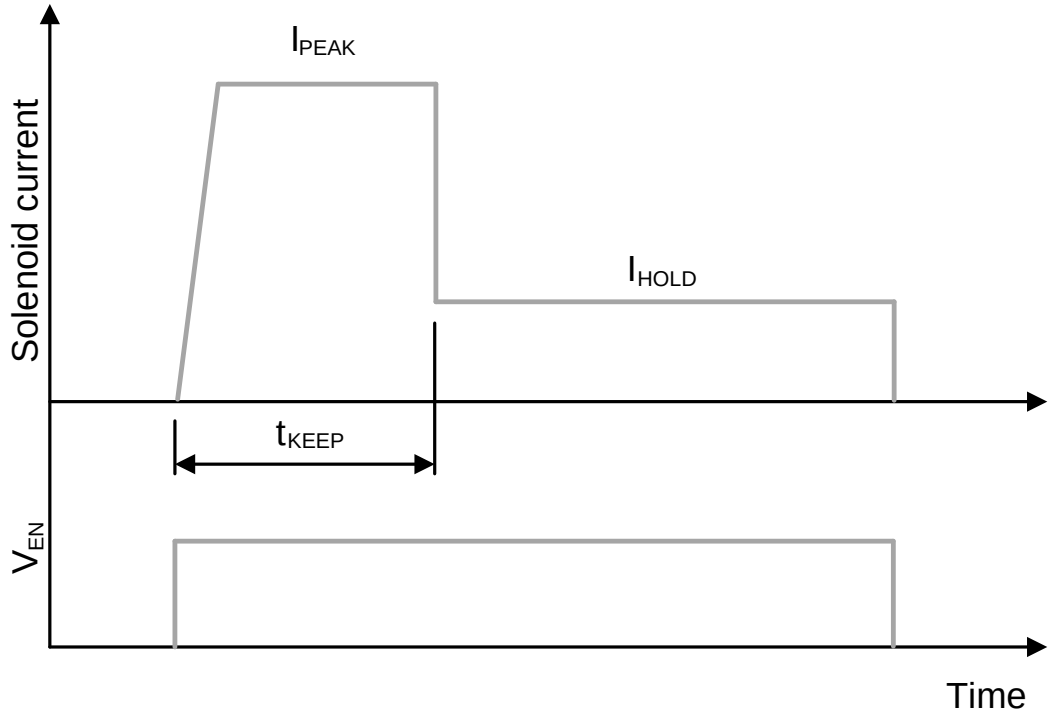

Figure 9. EN Signal Controlling DRV110

Table 1. Parameter Specification of EN Input of DRV110

PARAMETER		MIN	TYP	MAX
V_{IL}	Input low level			1.3 V
V_{IH}	Input high level	1.65 V		
R_{EN}	Input pull up resistance	350 kΩ	500 kΩ	

Copyright © 2014, Texas Instruments Incorporated

In the circuit shown in Figure 10, the EN pin is supplied from the resistive divider consists of R2 and R38, operated from V_{IN}.

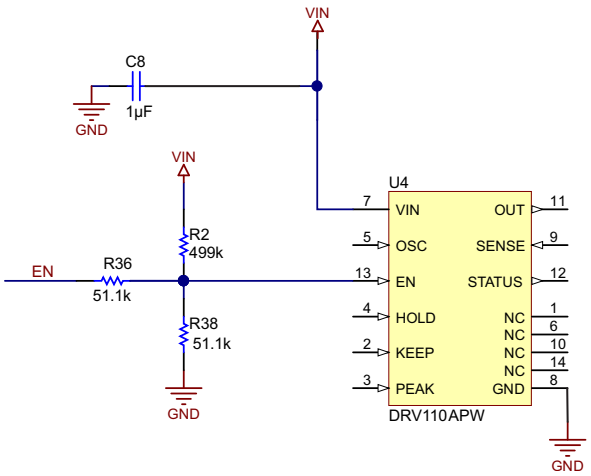

Figure 10. EN Signal Control Circuit

Now R2 and the internal resistor R_{EN} form a parallel path and the equivalent resistance given by Equation 4:

$$R_{EQVT} = \frac{R_2 \times R_{EN}}{R_2 + R_{EN}} \tag{4}$$

The DRV110 is enabled when V_{EN} reaches 1.65 V, which is the V_{IN} of EN pin, and is given by Equation 5:

$$V_{EN} = V_{IN} \times \frac{R38}{R38 + R_{EQVT}} \tag{5}$$

In the reverse, the DRV110 is enabled when V_{IN} reaches a value given by Equation 6:

$$V_{IN} = 1.65 \times \frac{R38 + R_{EQVT}}{R_{38}} \tag{6}$$

In the reference design, R2 = 499 k and R38 = 51.1 k, so the DRV110 turns on at approximately V_{IN} = 10 V

When the EN logic signal is supplied from an external source (PLC), populate R36 and do not populate R2. Calculate the value of R36 and R38 accordingly, considering the R_{EN} pull up to V_{IN}. The EN pin of the DRV110 has an absolute maximum rating of 7 V. To ensure a safe operation, make sure that the EN pin voltage is less than 5 V. When the PLC has 0 to 5 V, it can be given directly to EN pin. When the PLC has an output voltage of 0 to 10 V, design R36 and R38 so that the EN pin voltage is 5 V maximum.

Copyright © 2014, Texas Instruments Incorporated

4.2.2.2 Current Control

The current control loop regulates the solenoid current cycle by cycle by sensing voltage at the SENSE pin and controlling the external switching device gate through the OUT pin. During the ON cycle, the OUT pin voltage is driven and kept high (equal to V_{IN} voltage) as long as the voltage at the SENSE pin is less than V_{REF} allowing current to flow through the external switch. As soon as the voltage at the SENSE pin is above V_{REF}, the OUT pin voltage is immediately driven and kept low until the next ON cycle is triggered by the internal PWM clock signal. In the beginning of each ON cycle, the OUT pin voltage is driven and kept high for at least the time determined by the minimum PWM signal duty cycle, D_{MIN} (7.5%).

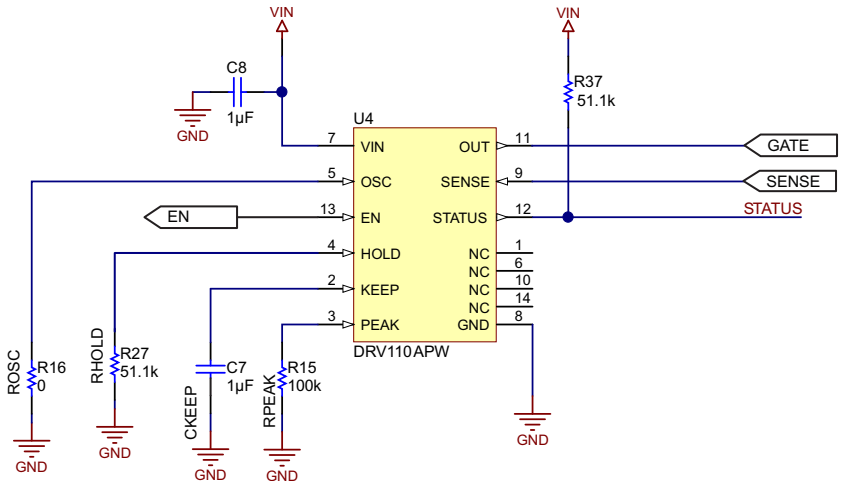

Figure 11. DRV110 Circuit With Reference Setting Resistors

Copyright © 2014, Texas Instruments Incorporated

Determining I_{PEAK} and I_{HOLD} of the DRV110

The activation (peak) current of the DRV110 is determined by the coil's ON resistance and the pick-up voltage required by the solenoid coil. This resistance value at maximum temperature ($R_{COIL_T(MAX)}$) and the relay nominal operating voltage (V_{NOM}) can be used to calculate the I_{PEAK} value required at maximum temperature:

$$I_{PEAK} = \frac{V_{NOM}}{R_{COIL_T(MAX)}} \tag{7}$$

The hold current of the DRV110 is determined by the ON resistance of the coil and by the voltage required to keep the relay from dropping out. To keep a relay from dropping out, manufacturers give recommended voltage values in their datasheets; however, some margin for vibration and other contingencies must be added to these. Many relay manufacturers give 35% of the nominal voltage as a safe limit. Assuming this to be enough, the $R_{COIL_T(MAX)}$ value and the relay nominal operating voltage (V_{NOM}) can be used to calculate the I_{HOLD} value that works over the temperature:

$$I_{HOLD} = \frac{0.35 \times V_{NOM}}{R_{COIL_T(MAX)}} = 0.35 \times I_{PEAK} \tag{8}$$

V_{PEAK} and V_{HOLD} depend on fixed resistance values R_{PEAK} and R_{HOLD}. If the PEAK pin is connected to ground, the peak current reference voltage, V_{PEAK}, is at its default value (internal setting). The V_{PEAK} value can alternatively be set by connecting an external resistor to ground from the PEAK pin. For example, if a 50-kΩ (= R_{PEAK}) resistor is connected between PEAK and GND, and R_{SENSE} = 1 Ω, then the externally set I_{PEAK} level is 900 mA. If R_{PEAK} = 200 kΩ and R_{SENSE} = 1 Ω, then the externally set I_{PEAK} level is 300 mA. In case R_{SENSE} = 2 Ω instead of 1 Ω, then I_{PEAK} = 450 mA (when R_{PEAK} = 50 kΩ) and I_{PEAK} = 150 mA (when R_{PEAK} = 200 kΩ). The external setting of the HOLD current, I_{HOLD}, works in the same way, but the current levels are one-sixth of the I_{PEAK} levels. External settings for I_{PEAK} and I_{HOLD} are independent of each other. If R_{PEAK} is decreased below 33.33 kΩ (typical value), then the reference is clamped to the internal setting voltage of 300 mV. The same is valid for R_{HOLD} and I_{HOLD}. I_{PEAK} and I_{HOLD} values can be calculated by using Equation 9 and Equation 10:

$$I_{PEAK} = \frac{1\,\Omega}{R_{SENSE}} \times \frac{900\text{ mA}}{R_{PEAK}} \times 66.67\text{ k}\Omega \;;\; 66.67\text{ k}\Omega < R_{PEAK} < 2\text{ M}\Omega \tag{9}$$

$$I_{HOLD} = \frac{1\,\Omega}{R_{SENSE}} \times \frac{150\text{ mA}}{R_{HOLD}} \times 66.67\text{ k}\Omega \;;\; 66.67\text{ k}\Omega < R_{PEAK} < 333\text{ k}\Omega \tag{10}$$

The variation of peak and hold current reference with R_{PEAK} and R_{HOLD} resistance values is shown in Figure 12.

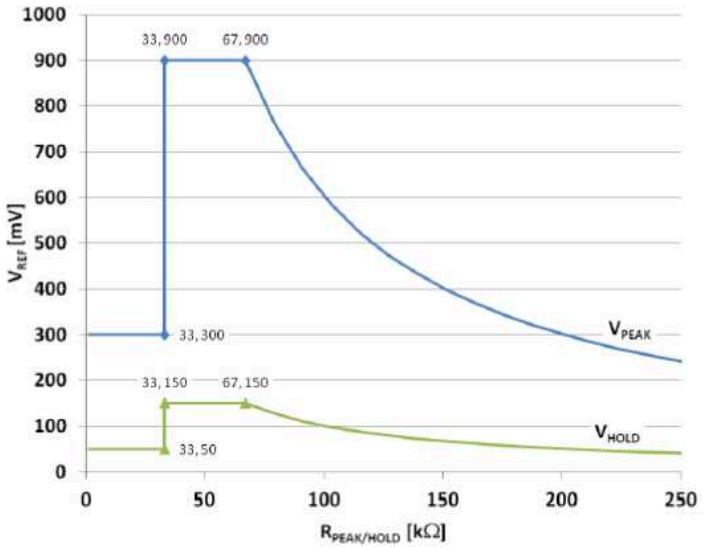

Figure 12. PEAK and HOLD Mode V_{REF} Settings for DRV110

Copyright © 2014, Texas Instruments Incorporated

The solenoid coil used for testing has a maximum steady state current of 720 mA at 25°C when it is driven directly from 24-V DC.

In the reference design, the peak and hold current values are selected as 1 A and 250 mA (which is approximately 30% of the maximum current of the solenoid) respectively by properly sizing the sense, peak, and hold resistors:

- I_{PEAK} = 1A
- I_{HOLD} = 250 mA

In the reference design, R33 and R34 form the sense resistor:

- R_{SENSE} = R33 + R34 = 0.59 Ω
- R_{PEAK} = R15 = 100k and R_{HOLD} = R27 = 51.1k

4.2.2.3 Determining the Value of KEEP Time

The time t_{KEEP} is set externally by connecting a capacitor to the KEEP pin. A constant current is sourced from the KEEP pin that is driven into an external capacitor resulting in a linear voltage ramp. When the KEEP pin voltage reaches 100 mV, the current regulation reference voltage, V_{REF}, is switched from V_{PEAK} to V_{HOLD}. Dependency of t_{KEEP} from the external capacitor size can be calculated by Equation 11:

$$t_{KEEP}[S] = C_{KEEP}[F] \times 10^5 \left[\frac{S}{F}\right] \quad (11)$$

To get t_{KEEP} equal to 100 ms, C_{KEEP} must equal 1 µF.

Use Table 2 to find out the value of the capacitor required for different KEEP times.

Table 2. Capacitance Value for Different KEEP Times

CAPACITANCE (µF)	KEEP TIME (ms)
0.01	1
0.02	2
0.03	3
0.04	4
0.05	5
0.06	6
0.07	7
0.08	8
0.09	9
0.1	10
0.2	20
0.3	30
0.4	40
0.5	50
0.6	60
0.7	70
0.8	80
0.9	90
1	100

Copyright © 2014, Texas Instruments Incorporated

4.2.2.4 Determining the Oscillator Frequency

The frequency of the internal PWM clock signal, PWMCLK, that triggers each OUT pin ON cycle can be adjusted by an external resistor, R_{OSC}, connected between OSC and GND. The default frequency is used when OSC is connected to GND directly. Equation 12 shows the PWM frequency as a function of external fixed adjustment resistor value (greater than 66.67 kΩ:

$$F_{PWM} = \frac{60\ \text{kHz}}{R_{OSC}} \times 66.67\ \text{k}\Omega\ ;\ 66.67\ \text{k}\Omega < R_{OSC} < 2\ \text{M}\Omega \tag{12}$$

Figure 13 shows the variation of switching frequency with R_{OSC}.

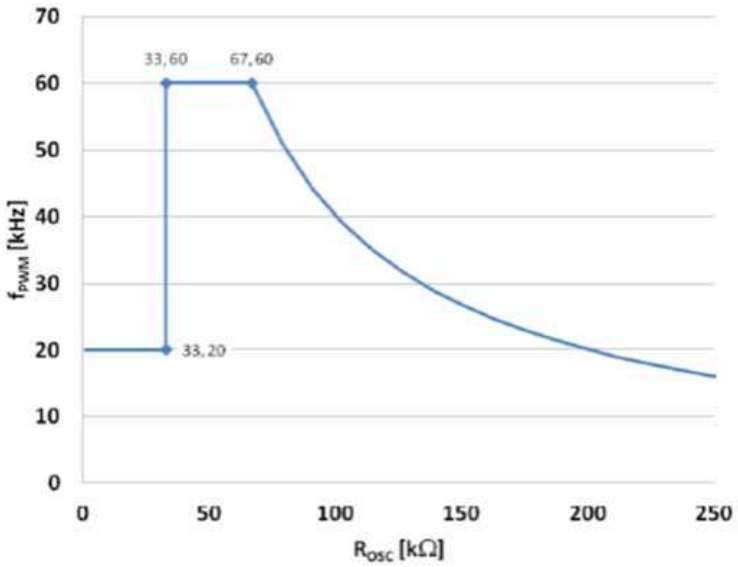

Figure 13. PWM Clock Frequency Setting for DRV110

This reference design uses a 20-kHz frequency. Therefore R_{OSC} = 0 Ω.

Copyright © 2014, Texas Instruments Incorporated

4.2.2.5 STATUS Pin

The open-drain pull-down path at the STATUS pin is deactivated if either undervoltage lockout or thermal shutdown blocks have triggered. Connect a pull-up at the STATUS pin to get the digital signal output.

The threshold levels are

- Undervoltage lockout threshold = 4.6 V
- Thermal shutdown: Junction temperature startup threshold = 140°C
- Thermal shutdown: Junction temperature shutdown threshold = 160°C

In the reference design, R37 is the pull-up resistor connected to the STATUS pin. The STATUS pin output is a logic high when V_{IN} is less than the undervoltage lockout threshold. When V_{IN} is more than the undervoltage threshold, the STATUS pin output is zero. When undervoltage is detected by the DRV110, the STATUS pin output is logic high or it will be V_{IN}. The output available at the FAULT IND is a fraction of the available voltage.

4.2.2.6 Selection of the Power Switching Device

The reference design is used to drive solenoids rated at 24-V DC with a maximum power rating of 20 W. The nominal current of the solenoid is approximately 0.72 A. Considering the temperature variations, the maximum nominal current of the solenoid is 1 A. Taking a safety margin of 100%, select any MOSFET rated for 2 A or more at the operating junction temperature. Considering the operating junction temperature of 100°C, the MOSFET must be rated for a continuous current rating greater than 2 A at 100°C.

The nominal operating voltage of the circuit is 24 ±20%.The input voltage rating can be increased by changing few components as mentioned in Section 4.3 to 48-V DC ±20%. Therefore, the voltage rating of the MOSFET must be at least 100 V.

The operating voltage is 24 ±20%. The selected MOV has a clamp voltage of 93 V, so the voltage rating must be greater than 100 V.

To switch properly, select a device with a gate charge less than 10 nC at 10 V.

Copyright © 2014, Texas Instruments Incorporated

4.2.3 Signal Conditioning and Amplifier Stage

A differential amplifier is used in this reference design to provide the solenoid current information to the external interface. The solenoid current can be derived by sensing the switch current. The switch current is sensed across R34 and amplified. R8, C1, and R1 form a low-pass filter. Selecting R1 = R8, R5 = R6 and R4 = R7,

$$\text{Gain of the differential amplifier U2A} = \frac{R4}{(R1+R5)} \quad (13)$$

$$\text{Output of the differential amplifier} = I_{SENSE} \times R34 \times \frac{R4}{(R1+R5)}$$

where

- I_{SENSE} is the solenoid current sensed across the sense resistor R34 (14)

The peak magnitude of the switch current gives the solenoid current. D12, R9, C2, and R13 form the filter network that constantly tracks the peak output of the differential amplifier.

A_{OUT} is the filtered current available at the interface for monitoring.

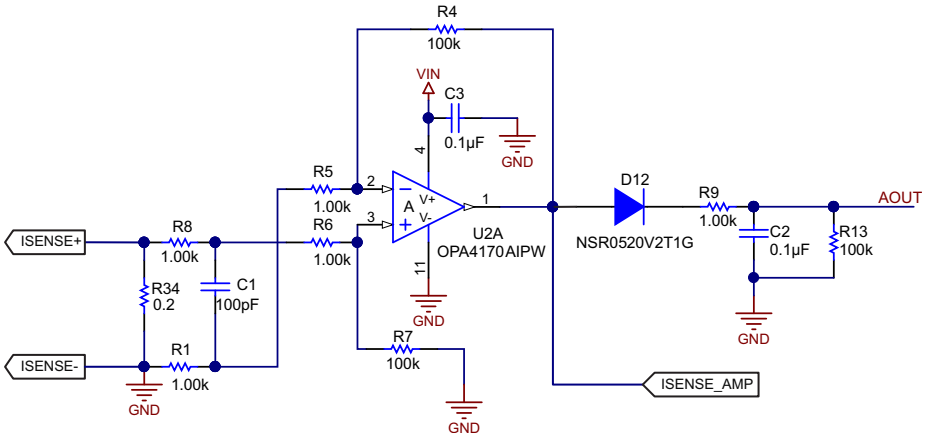

Figure 14. Solenoid Current Amplification Stage

In this reference design, R34 = 0.2 Ω, R1 = R5 = R6 = R8 = 1 k, and R4 = R7 = 100 k. Therefore, the gain of the differential amplifier is 50.

The output of the differential amplifier = I_{SENSE} × 0.2 × 50 = 10 × I_{SENSE}, and A_{OUT} = 10 × Solenoid current.

Therefore, when the solenoid current is 0.7 A,

A_{OUT} = 0.7 × R34 × R4 / (R1 + R5)
= 0.7 × 0.2 × 50
= 7 V

Copyright © 2014, Texas Instruments Incorporated

4.2.4 Plunger Position Detection Circuit

Figure 15 shows the current drawn by the solenoid at different temperatures. The curves shift up as the temperature decreases because of the reduction in resistance of the solenoid. However, the difference between the peak and valley of the solenoid current dip due to the Back-EMF remains constant despite the temperature. This difference is used as the threshold to detect the movement of the plunger of the solenoid valve.

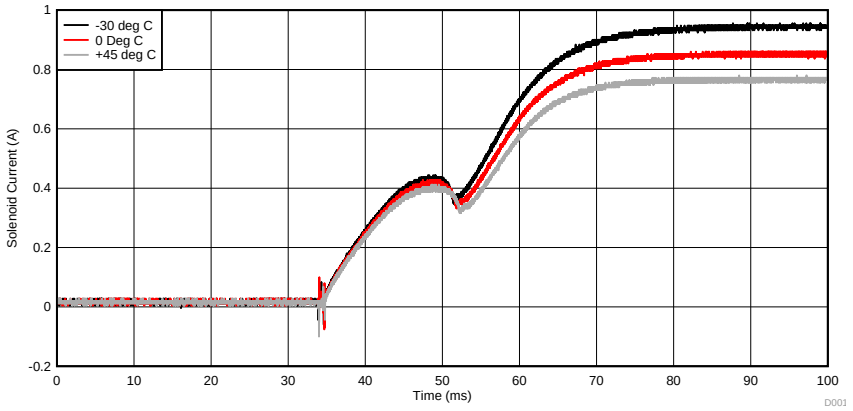

Figure 15. Solenoid Current Curves at Different Temperature

The detection logic circuit senses the solenoid current, and when it detects the defined valley point, it is interpreted as the end of movement of the plunger.

Figure 16 shows the plunger position detection circuit. The output voltage of the differential amplifier (I_{SENSE_AMP}, which is the amplified solenoid current) is the input to the plunger position detection circuit. This circuit consists of an active peak detector, an op-amp adder, and a comparator with latch.

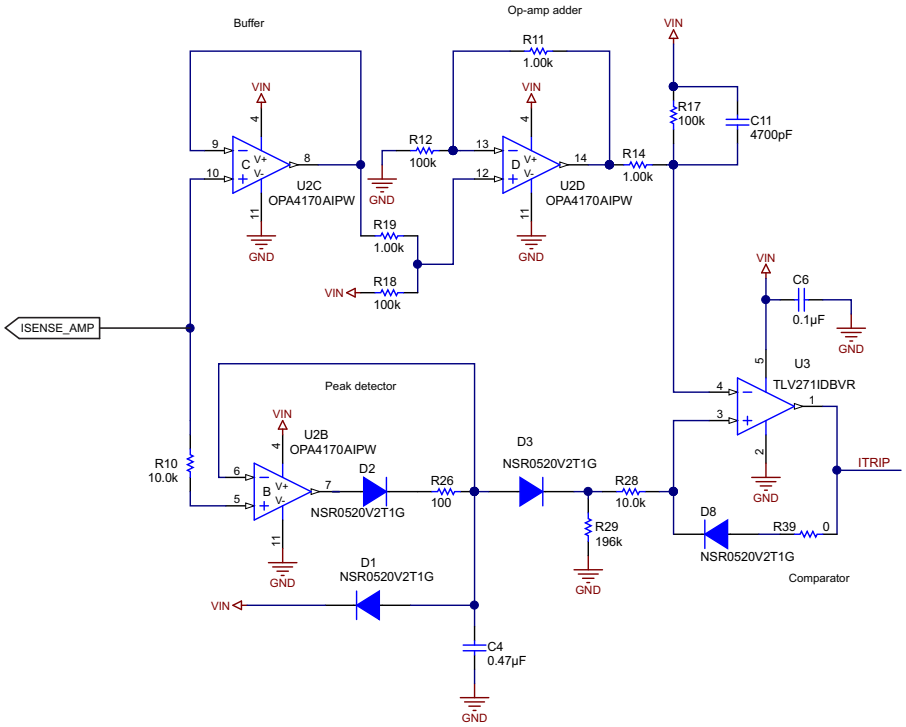

Figure 16. Solenoid Plunger Position Detection Circuit

Copyright © 2014, Texas Instruments Incorporated

Figure 17 shows the operation of the plunger position circuit. The output of the differential amplifier U2A, which is the amplified solenoid current, is fed to the peak detector. The peak detector output tracks the solenoid current until point 1, where the solenoid plunger starts moving. After this point, the solenoid current decreases because of the Back-EMF and the solenoid current dips to point 2. However, the output of the peak detector remains as a value equal to the peak value at point 1, and it is fed to the non-inverting input of the comparator U3. The inverting input of the comparator U3 is fed with a level-shifted solenoid current. This waveform is derived by shifting the solenoid current waveform by a voltage equivalent to the difference between the peak current at point 1 and valley current at point 2. From the characterization of the solenoid, the difference in current is approximately 64 mA despite the operating temperature. At point 2, the output of the comparator I_{TRIP} goes high and latches there.

When the solenoid is faulty or the plunger has not moved fully, the solenoid current either does not have a dip or a dip of sufficient magnitude to cross the predefined threshold. This result is interpreted as fault condition and fault signal is generated.

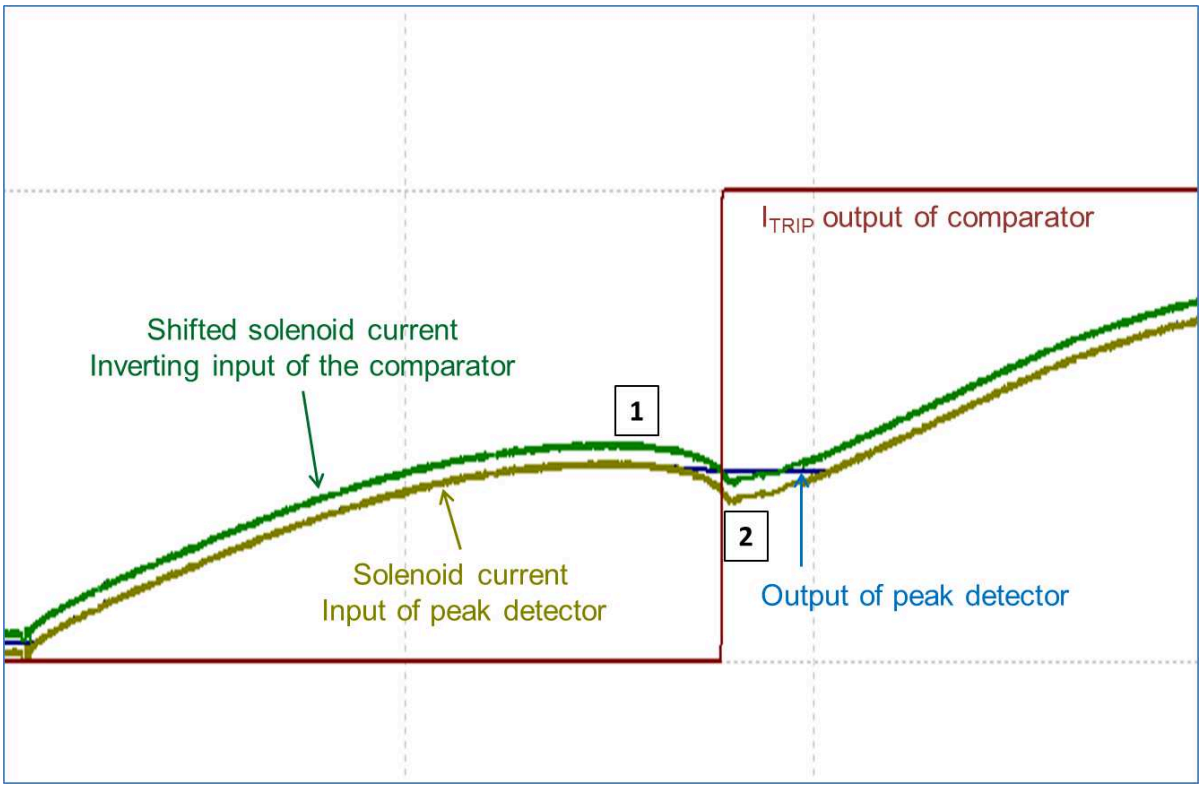

Figure 17. Solenoid Plunger Position Detection Principle

Copyright © 2014, Texas Instruments Incorporated

The peak detector circuit is shown in Figure 18. The output of the differential amplifier U2A is fed to the active peak detector formed by the op-amp U2B, diode D2, resistor R26, and capacitor C4. The small resistor R26 is added to improve the stability of the op-amp U2B as it is charging a capacitor. The diode D1 ensures that during power off the capacitor C4 discharges immediately.

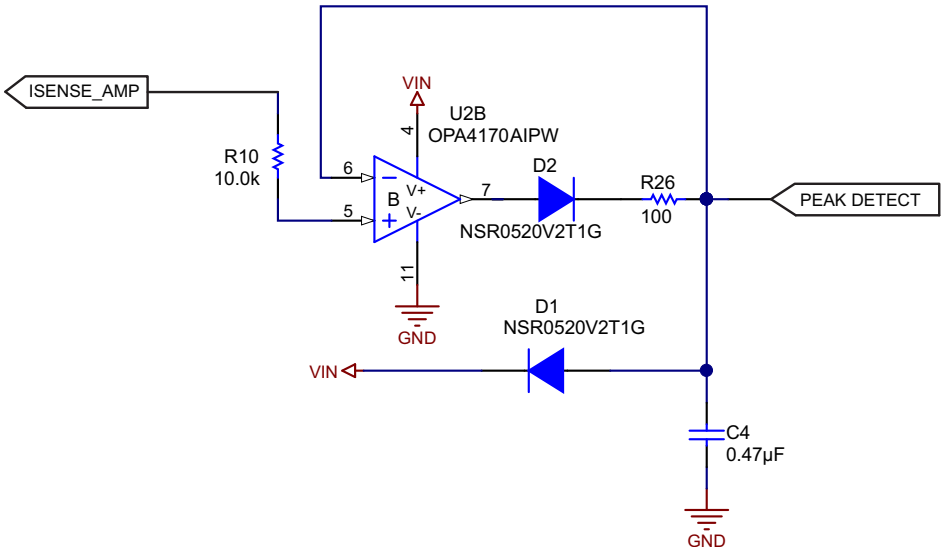

Figure 18. Peak Detector Circuit

The voltage at the output of the differential amplifier U2A corresponding to a 64-mA current = 0.064 × 0.2 × 50 = 0.64 V.

From Figure 17 at point 2, the shifted waveform must fall below the peak detector output for the comparator to trigger and latch. Therefore, considering a margin, the shifted solenoid current waveform is obtained by adding 0.3 V to the output of the differential amplifier. This margin is provided to avoid the effect of peak detector capacitor discharge due to the resistor R29.

Figure 19 shows the solenoid current level shifting circuit. The op-amp U2C is the buffer provided before the adder circuit U2D. In the circuit, U2C and U2D generate the shifted waveform. The op-amp OPA4170 provides a low offset voltage and drift, making the device suitable for this design.

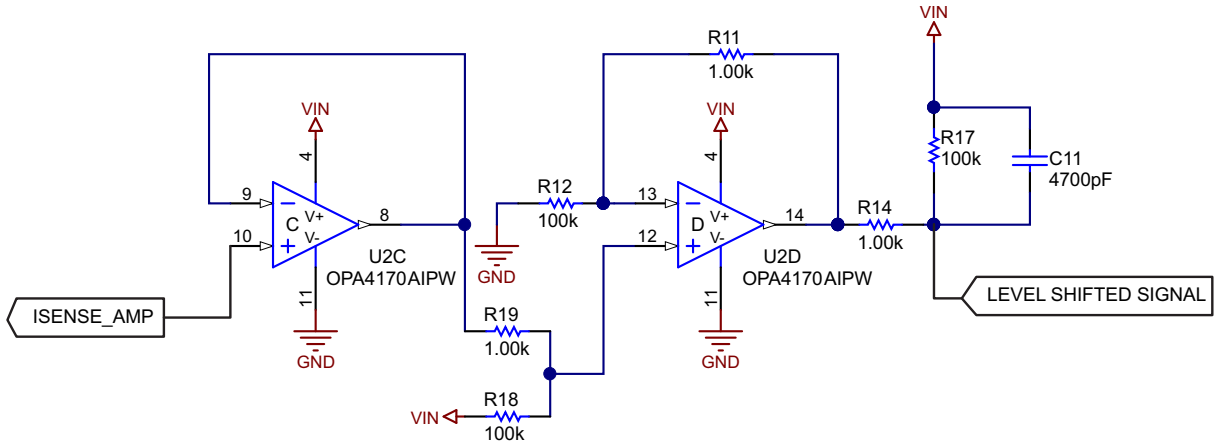

Figure 19. Solenoid Current Level Shifting Circuit

Copyright © 2014, Texas Instruments Incorporated

The comparator with latch circuit is shown in Figure 20. The resistor R29 is used to avoid the turn on latching of the comparator U3. The components R17 and C11 are also provided to avoid the turn on latching of U3 (see Figure 19). The resistor R17 pulls the inverting input of U3 to a positive voltage (depending on the value of R17 and R14), which makes sure that the inverting input of U3 is more than the non-inverting input. Therefore, nothing latches U3 when the circuit powers up.

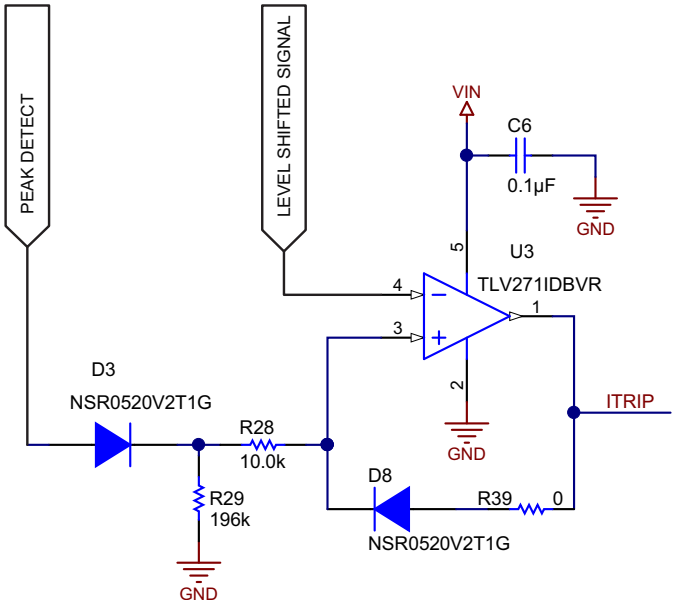

Figure 20. Comparator Circuit Giving the Signal I_{TRIP}

Referring to the circuit in Figure 21, when I_{TRIP} goes high, Q3 turns on, FAULT IND goes low, and Q2 turns off, which causes the KEEP capacitor C7 to charge.

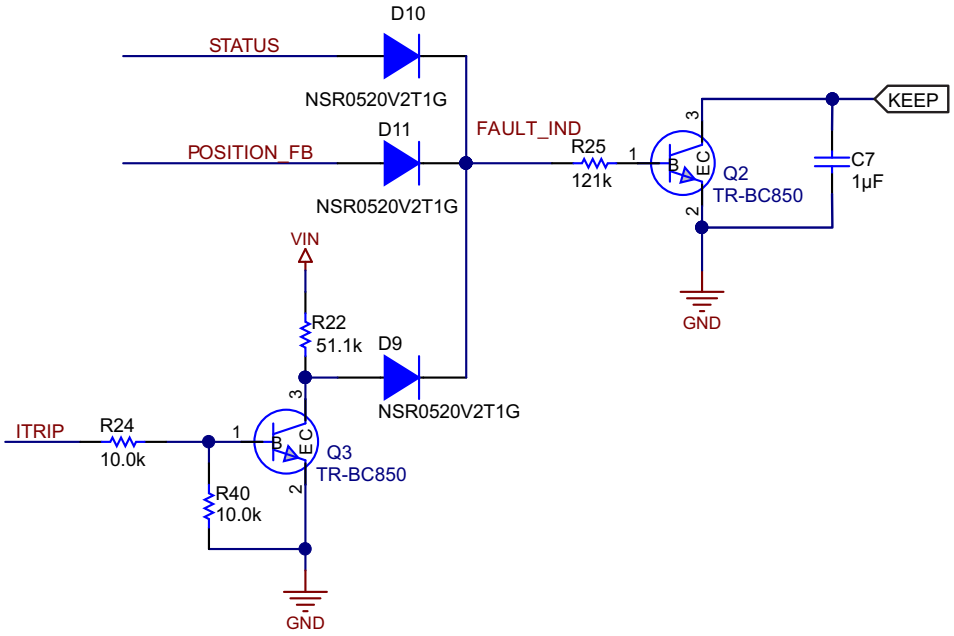

Figure 21. Interfacing I_{TRIP} to Discharge KEEP Capacitor

Copyright © 2014, Texas Instruments Incorporated

The input to the solenoid excitation detection circuit is I_{SENSE_AMP}.
In the adder circuit using U2D, selecting R19 = R11 = 1 k, R18 = R12 =100 k, R14 = 1 k, and R17 = 100 k,

$$\text{Output Voltage of U2D} = I_{SENSE_AMP} + \left(V_{IN} \times \frac{R11}{R12}\right) \quad (15)$$

The resistors R17 and R14 also form a resistive divider circuit and add a small voltage to the output of U2D before feeding the shifted waveform to the inverting input of U3. This additional voltage shift introduced by R17 and R14 is maximum when the output voltage of U2D is zero.

When output voltage of U2D is zero, the voltage shift due to R14 and R17 = V_{IN} × (R14 / R17).

In this reference design, the voltage shift due to R14 and R17 = 15 × .01 = 0.15 V.

Inverting input voltage of U3 = Output voltage of U2D + Voltage shift due to R14 and R17. This path leads to Equation 16:

$$\text{Inverting input voltage of U3} = I_{SENSE_AMP} + \left(V_{IN} \times \frac{R11}{R12}\right) + 0.15 \quad (16)$$

Therefore,

$$\text{The total voltage shift provided} = \left(V_{IN} \times \frac{R11}{R12}\right) + 0.15 \quad (17)$$

In this reference design,

$$\text{The total voltage shift provided} = \left(15 \times \frac{1}{100}\right) + 0.15 = 0.3 \text{ V} \quad (18)$$

NOTE: Characterizing Other Solenoids
The difference between the peak and hold current differs for different types of solenoids.

Use Table 3 to determine the values of different resistors when this circuit is used to detect the plunger position for different solenoids.

This chart assumes that the gain of the differential amplifier is 10 and V_{IN} is 15 V.

Table 3. Component Selection for Plunger Position Detection Circuit When Used With Different Solenoids

DIP IN SOLENOID EXCITATION CURRENT DUE TO EXCITATION BACK-EMF (mA)	I_{SENSE_AMP} EQUIVALENT TO DIP IN SOLENOID EXCITATION CURRENT (V)	SHIFT REQUIRED, CONSIDERING THE MARGIN (V)	RESISTOR VALUES			
			R12 = R18 (kΩ)	R11 = R19 (kΩ)	R14 (kΩ)	R17 (kΩ)
40	0.4	0.15	1M	1	1	100
45	0.45	0.15	300	1	1	100
50	0.5	0.2	300	1	1	100
55	0.55	0.25	150	1	1	100
60	0.6	0.3	100	1	1	100
65	0.65	0.35	75	1	1	100
70	0.7	0.4	60.4	1	1	100
75	0.75	0.45	49.9	1	1	100
80	0.8	0.5	42.2	1	1	100
85	0.85	0.55	37.4	1	1	100
90	0.9	0.6	33	1	1	100
95	0.95	0.65	30	1	1	100
100	1	0.7	27	1	1	100

Copyright © 2014, Texas Instruments Incorporated

4.2.5 Plunger Position Detection Using Hall Sensor

The DRV5023 can be mounted on the side of the solenoid where the plunger tip hits. The experimental setup is shown in Figure 22. When the plunger is open and the solenoid coil is supplied with current, the magnetic flux density produced by the coil is minimum. The Hall sensor detects the density as a weak magnetic field. The pull-up resistor provides a logic high at the output of the Hall sensor. When the plunger is closed, the flux linkage is at maximum and the Hall sensor pulls the output to low. When mounting the Hall sensor on the solenoid, a 0.01-µF (minimum) ceramic capacitor rated for VCC must be placed as close to the DRV5023 device as possible.

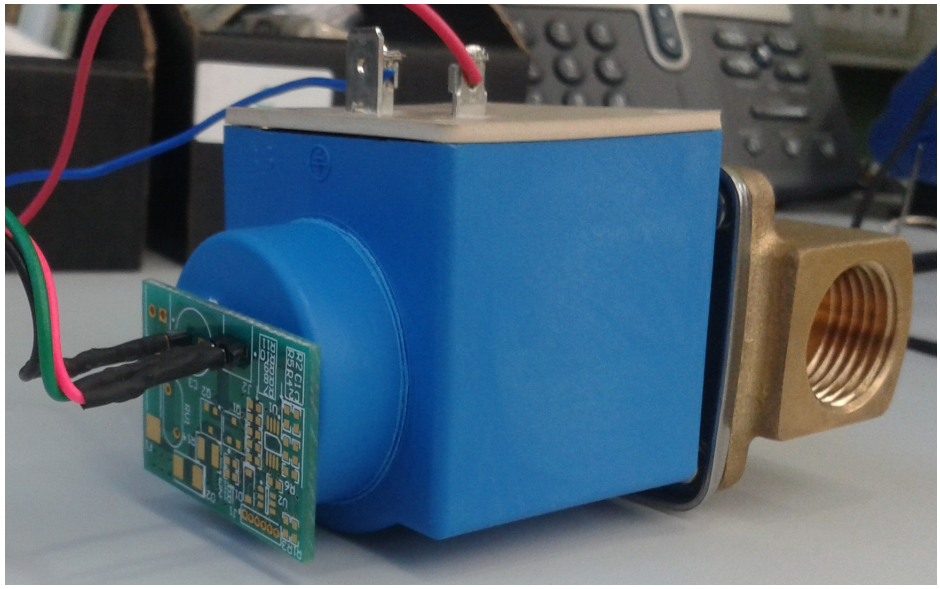

Figure 22. Mounting of Hall Sensor on Solenoid Coil for Testing

Connect the Hall sensor to the board through the connector J2. The latch-type Hall sensor DRV5023 detects the solenoid plunger position. R3 is the pull-up resistor for the open drain output of the DRV5023.

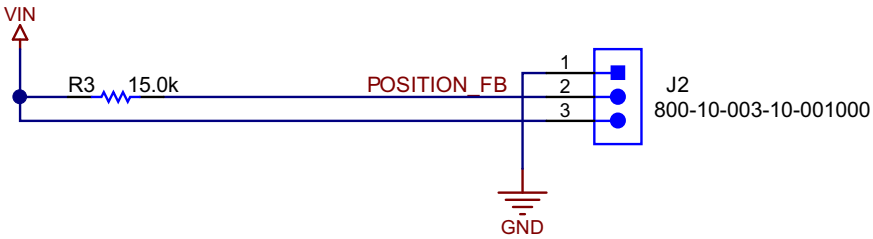

Figure 23. Hall Sensor Connector Circuit

The DRV5023 output stage uses an open-drain NMOS and is rated to sink up to 30 mA of current. For proper operation, calculate the value of the pull-up resistor R3 with Equation 19:

$$\frac{V_{IN_MAX}}{30\ mA} \le R3 \le \frac{V_{IN_MIN}}{100\ \mu A} \quad (19)$$

where

- V_{IN_MAX} and V_{IN_MIN} are the maximum and minimum values of V_{IN}

The size of R3 is a tradeoff between the OUT rise time and the current when OUT is pulled low. A lower current is ideal; however, faster transitions and bandwidth require a smaller resistor for faster switching.

In this reference design R3 equals 15 kΩ.

Copyright © 2014, Texas Instruments Incorporated

4.2.6 External Interface

The external interface is provided through J1 and J2. The external signal at J1 includes the FAULT IND, A_{OUT}, and EN. Connector J2 is the Hall sensor connections as explained previously. All the signals are ESD protected by means of U2, which is a four-channel 15-V unidirectional TVS diode. A_{OUT} is an output signal, which is the amplified solenoid output current as explained in Section 4.2.3. EN is an input signal, which is the ENABLE signal for turning on the DRV110 (and therefore excites the solenoid). Control the turn on and off of the DV110 and coil using this input.

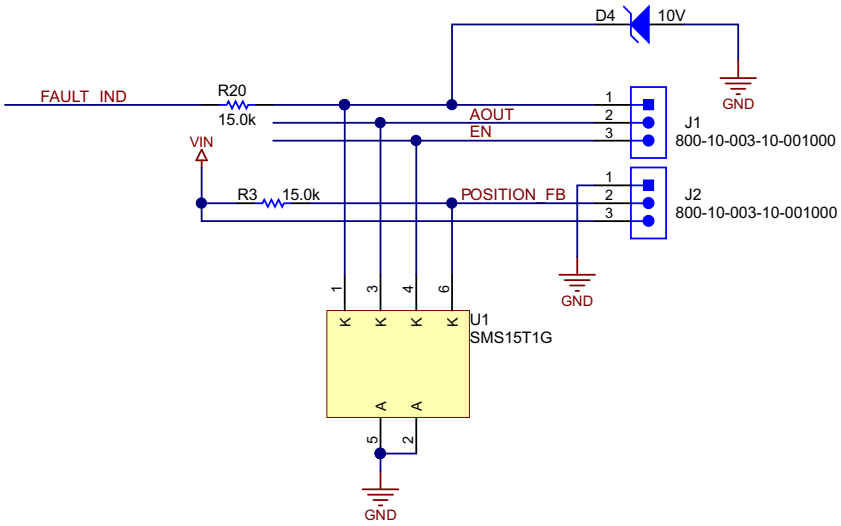

Figure 24. External Interface

FAULT IND is the wired OR output of the three signals STATUS, HALL SENSOR OUTPUT, and the plunger position detection I_{TRIP}. D4 is a 10-V Zener, which clamps the signal available at J1 to 10 V.

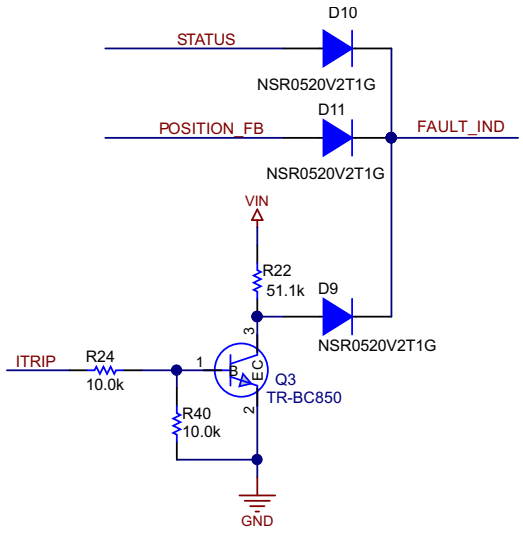

Figure 25. FAULT IND Signal

Copyright © 2014, Texas Instruments Incorporated

4.3 Board Design for Input Supply Voltages Greater Than 24 V

The reference design is designed for 24-V DC and can work in the input voltage supply range of 24-V DC ±20%. If the design has to be modified for any voltage greater than the specified voltage, the main components to be redesigned are the resistive dividers R21 and R23. Use the same calculation found in Section 4.2.1 to find the values of these resistors.

For example, if the input DC voltage is 48 V,

$$R_S = \frac{V_{S_MIN(DC)} - 15\ V}{1\,mA + I_{GATE_AVG} + I_{AUX}} \quad (20)$$

Using the same switching device, the average gate current remains same. I_{AUX} is also same as the calculated value as all the auxiliary circuits are operating from the regulated supply voltage.

Then R_S = (48 – 15) / 10 = 3.3 k. Choose R21 = 300 Ω and R23 = 3 k.

For increased input voltage ratings, select the MOSFET V_{DS} rating accordingly. Select the sense, peak, and hold resistors to set the peak and hold current appropriately.

Copyright © 2014, Texas Instruments Incorporated

5 Test Setup

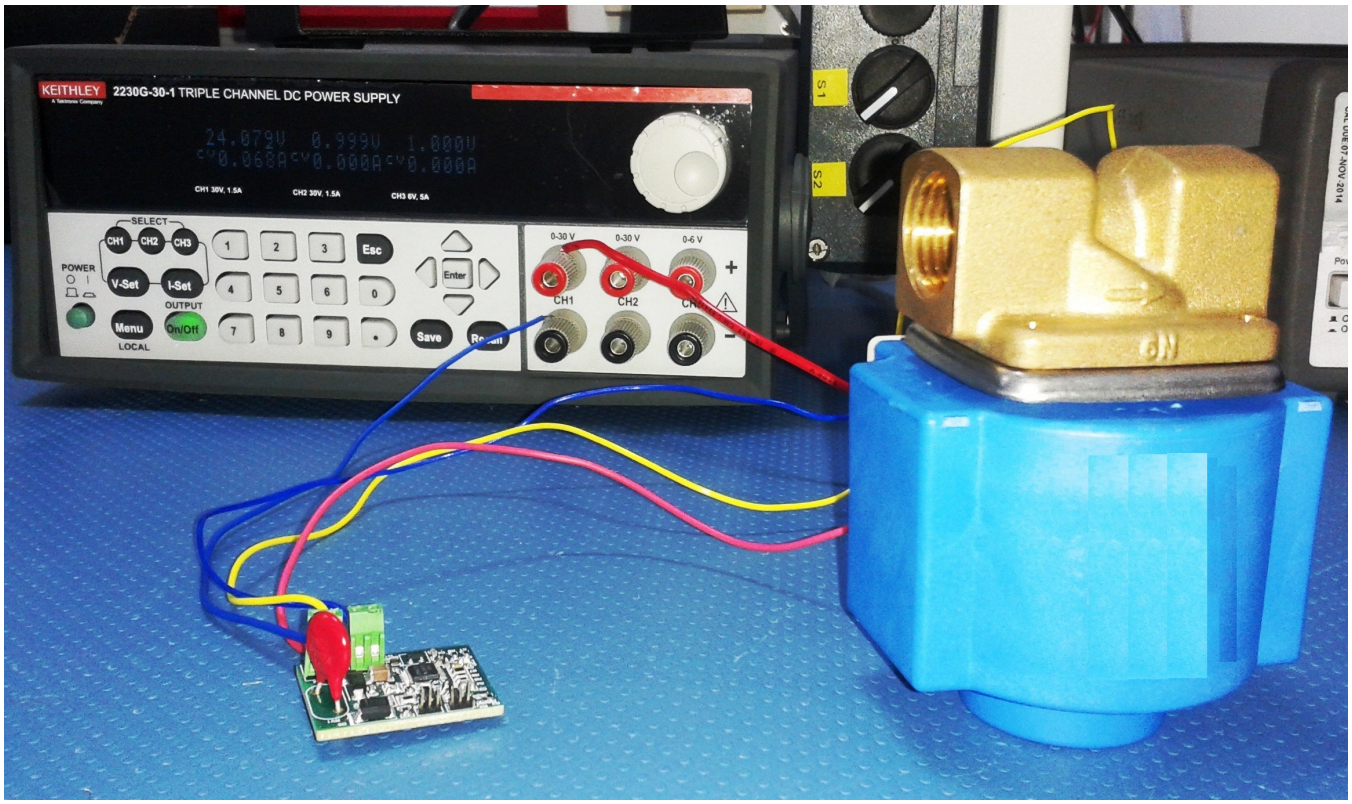

Figure 26. Test Setup

Copyright © 2014, Texas Instruments Incorporated

6 Test Results

6.1 Characterization of the Solenoid

The solenoid is characterized using a 24-V DC source with maximum current rating of 1.5 A.

6.1.1 Effect of Temperature on Solenoid Excitation Curve

Figure 29 shows the characterization curves of a typical solenoid at different temperature. The curves shift up as the temperature decreases because of the reduction in resistance of the solenoid. However, the difference between the peak and valley of the solenoid current dip due to excitation Back-EMF remains constant irrespective of the temperature. This difference is used as the threshold in detecting the excitation of the solenoid. The detection logic circuit senses the solenoid current, and when it detects a dip in current, that dip is interpreted as the excitation of the solenoid. The solenoid current characteristic curves at two different temperatures are shown in Figure 27 and Figure 28. These graphs are the current waveforms measured across a 1-Ω sense resistor.

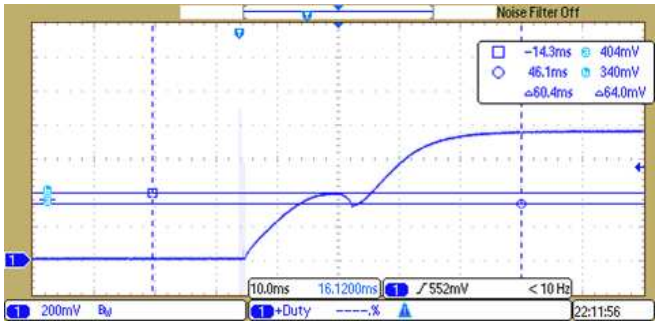

Figure 27. Solenoid Current Characteristics at –30°C

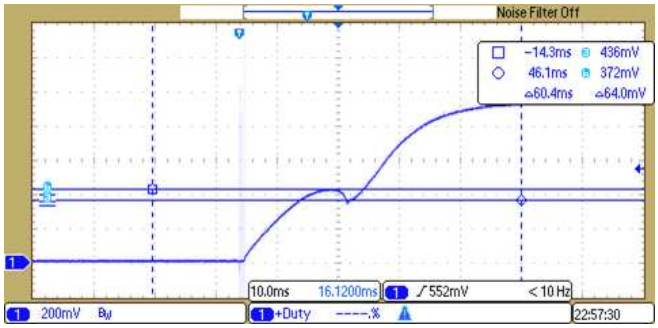

Figure 28. Solenoid Excitation Characteristics at 45°C

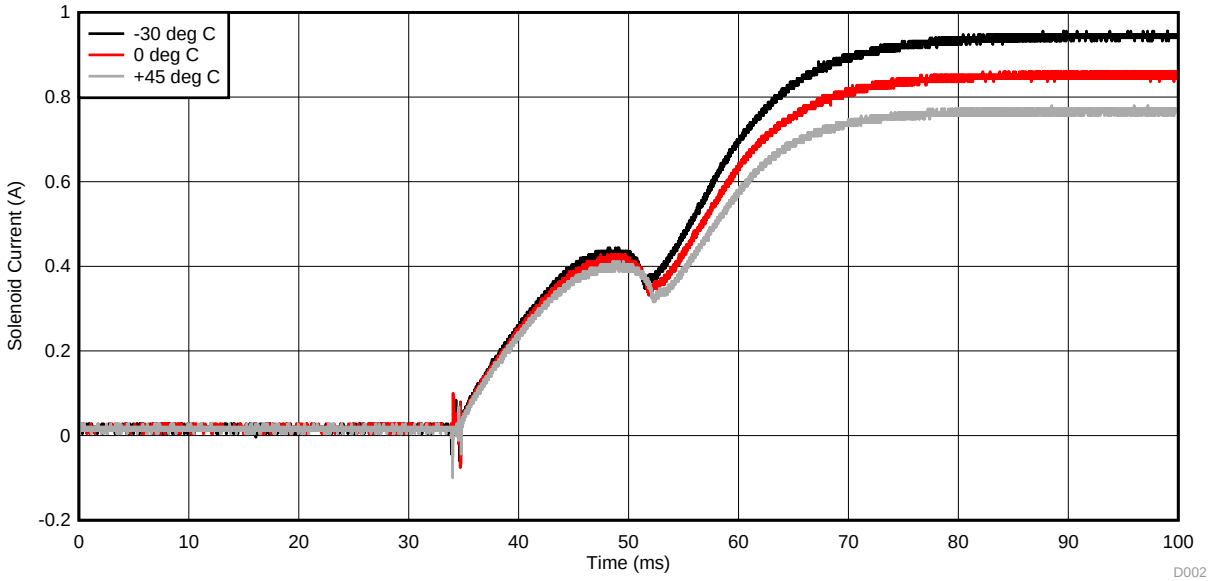

Figure 29. Solenoid Current Curves at Different Temperatures

Copyright © 2014, Texas Instruments Incorporated

6.2 Functional Test

Figure 30 shows the regulated power supply voltage (V_{IN}), EN pin voltage of the DRV110, and gate signal from the OUT pin of DRV110. The EN pin voltage increases proportional to V_{IN}, and when V_{IN} reaches 12.6 V, the DRV110 is enabled and it starts providing gate drive signal through the OUT pin.

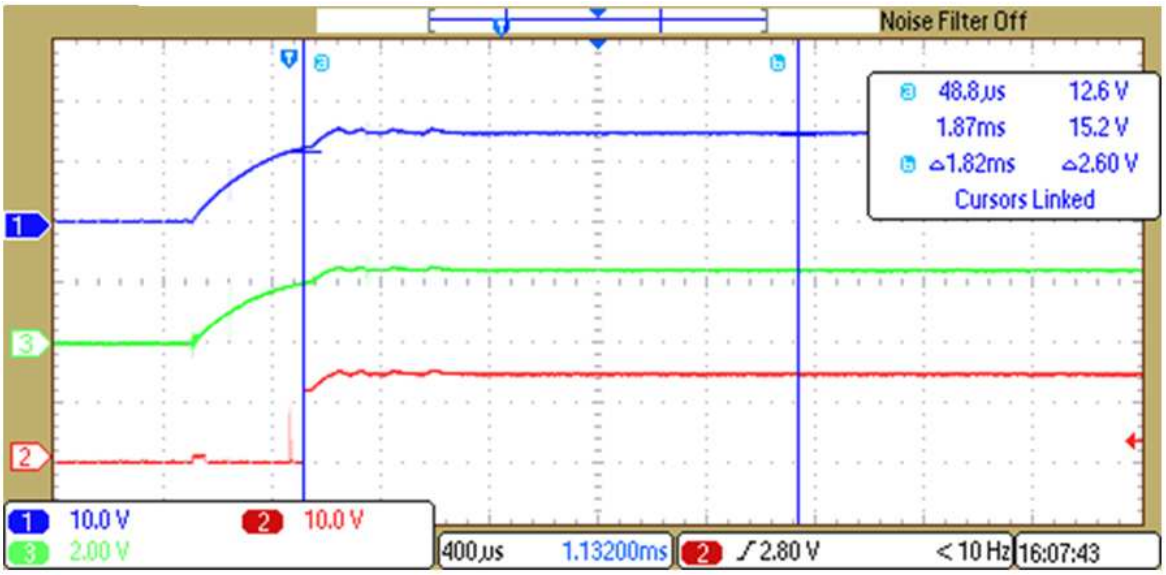

Figure 30. DRV110 Enable and Gate Voltage

Figure 31 shows the solenoid current and the gate drive signal coming from the DRV110. When the gate signal becomes high, MOSFET turns on and solenoid current ramps from zero. The peak current limit reference in the DRV110 is set to 1 A. The solenoid current reaches the maximum current of 696 mA and remains there for a time determined by the KEEP capacitor. During the hold mode, the DRV110 limits the current to a lower determined by the hold current reference. The DRV110 limits the current by reducing the duty cycle of the PWM, and the hold current is controlled to 224 mA.

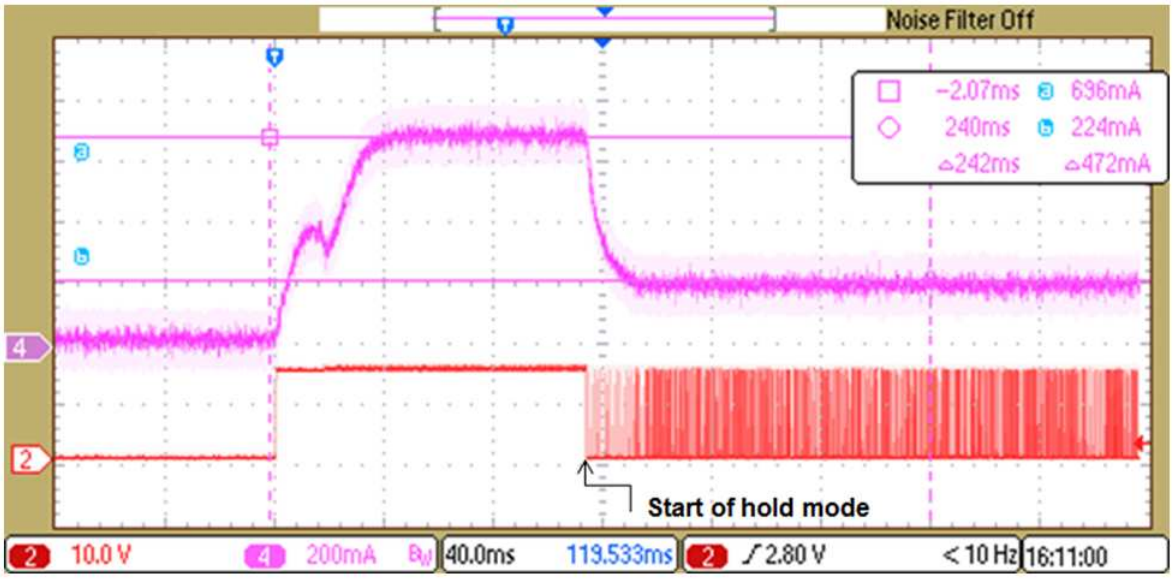

Figure 31. DRV110 in Peak and Hold Current Modes

Copyright © 2014, Texas Instruments Incorporated

The source current and source voltage is shown in Figure 32. The source voltage is 24 VC. The source current is much lower during the hold mode.

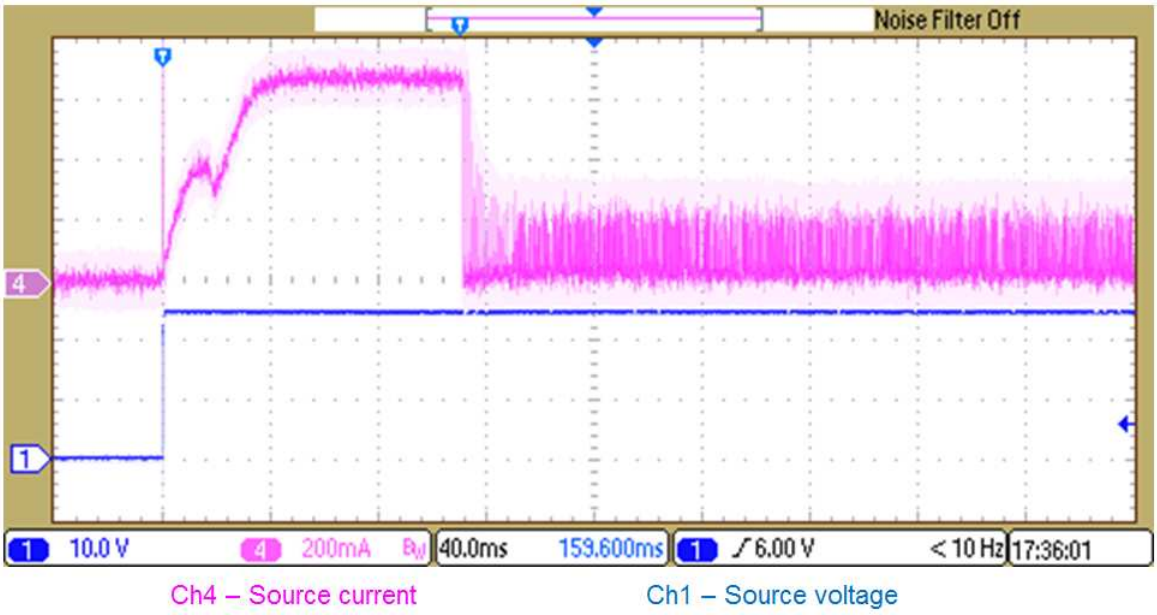

Figure 32. Source Current and Source Voltage

The variation of A_{OUT} (amplified solenoid current) is shown in Figure 33. During the peak mode, the solenoid current is 696 mA and corresponding A_{OUT} is 6.76 V. During the hold mode, A_{OUT} reduces to 1.8 V, corresponding to the reduction in hold current. Ch1 shows the voltage across the sense resistor and its amplified signal A_{OUT} at Ch3.

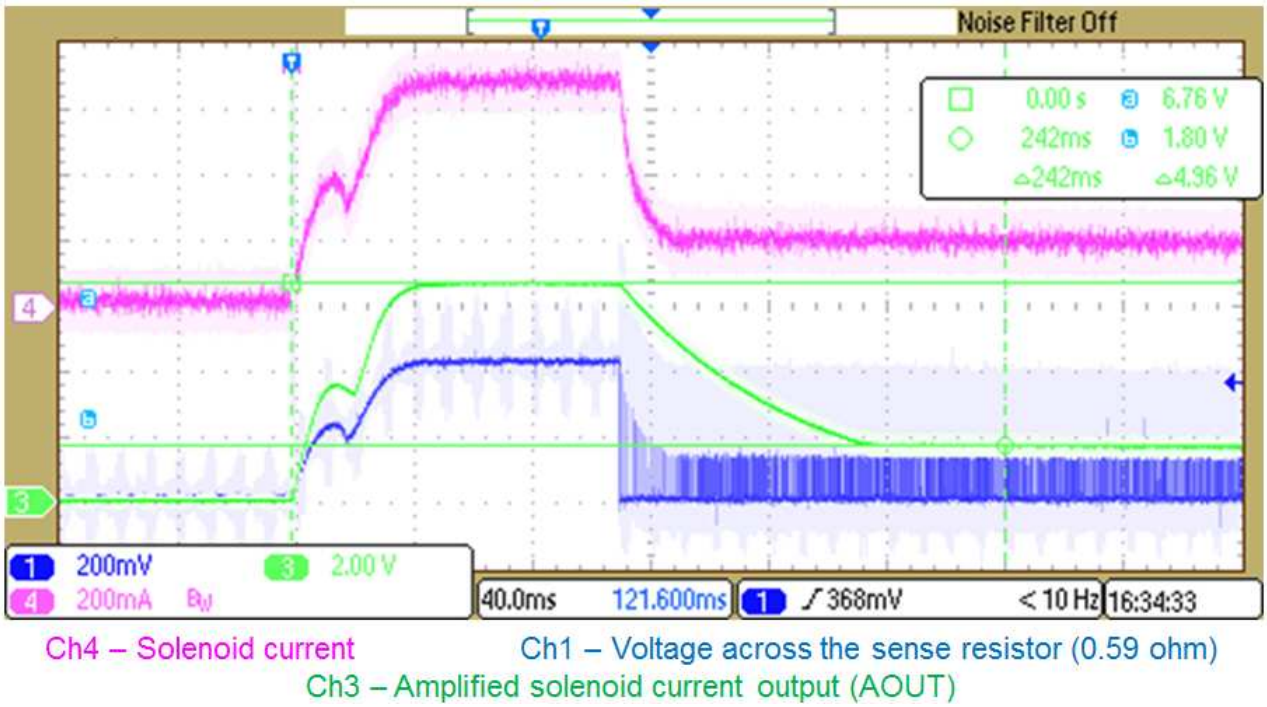

Figure 33. Solenoid Current and A_{OUT}

Copyright © 2014, Texas Instruments Incorporated

Figure 34 shows the detection of the proper plunger movement. Ch2 is the output of the comparator, called I_{TRIP}. I_{TRIP} detects the instant at which solenoid current is at the valley point, meaning the plunger has moved completely. I_{TRIP} goes high at this moment causing the KEEP capacitor to start charging. Once the KEEP capacitor voltage reaches 100 mV (the internal reference of the DRV110 to move to hold mode), the DRV110 goes to the hold current mode causing the solenoid current to decrease. The KEEP capacitor value used in testing is 1 µF and the KEEP time is 100 ms.

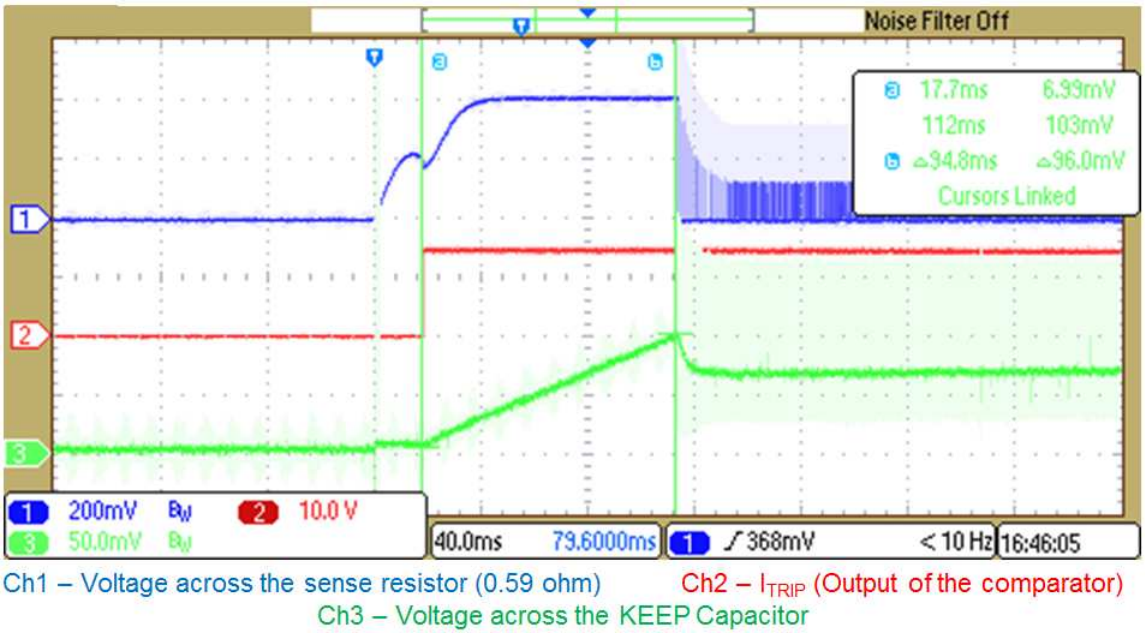

Figure 34. Detection of Plunger Movement

Figure 35 shows the fault signal during the plunger position detection. The FAULT IND signal is high until the plunger has moved. When the plunger moved completely, I_{TRIP} goes high, which pulls FAULT IND to low.

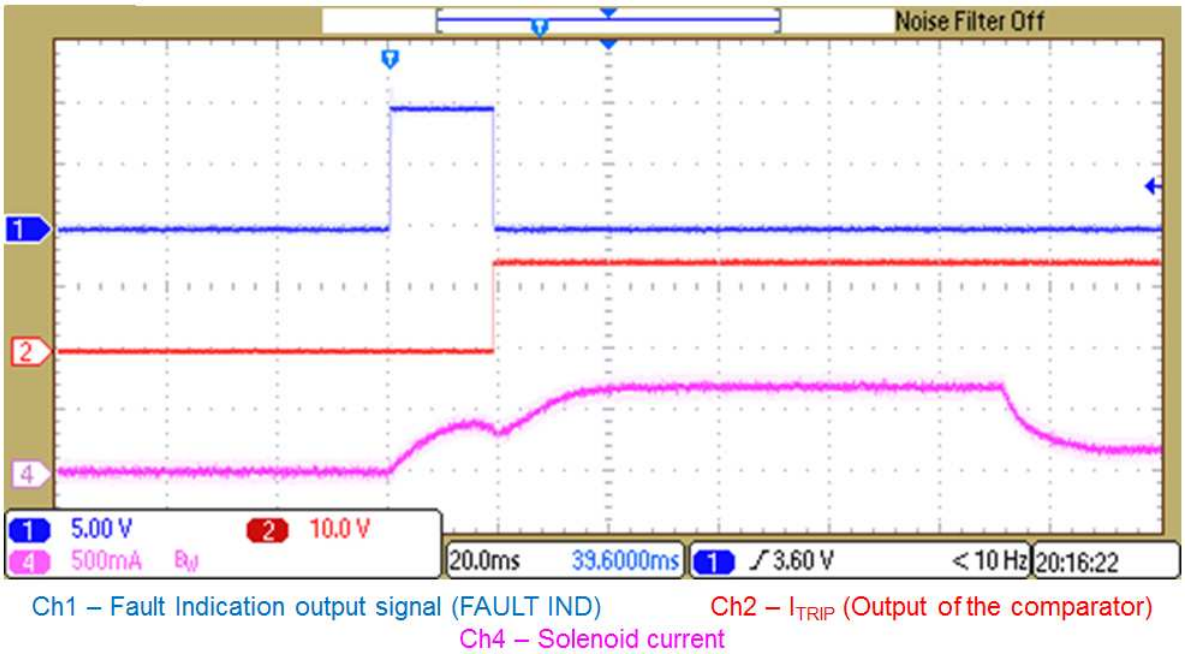

Figure 35. Detection of Plunger Movement—Fault Signal

Copyright © 2014, Texas Instruments Incorporated

Figure 36 shows the test results of the driver with a delayed movement in the plunger. The plunger movement is delayed mechanically. Figure 36 also shows the instant the plunger has moved, and at the same instant, I_{TRIP} goes high and the KEEP capacitor starts charging.

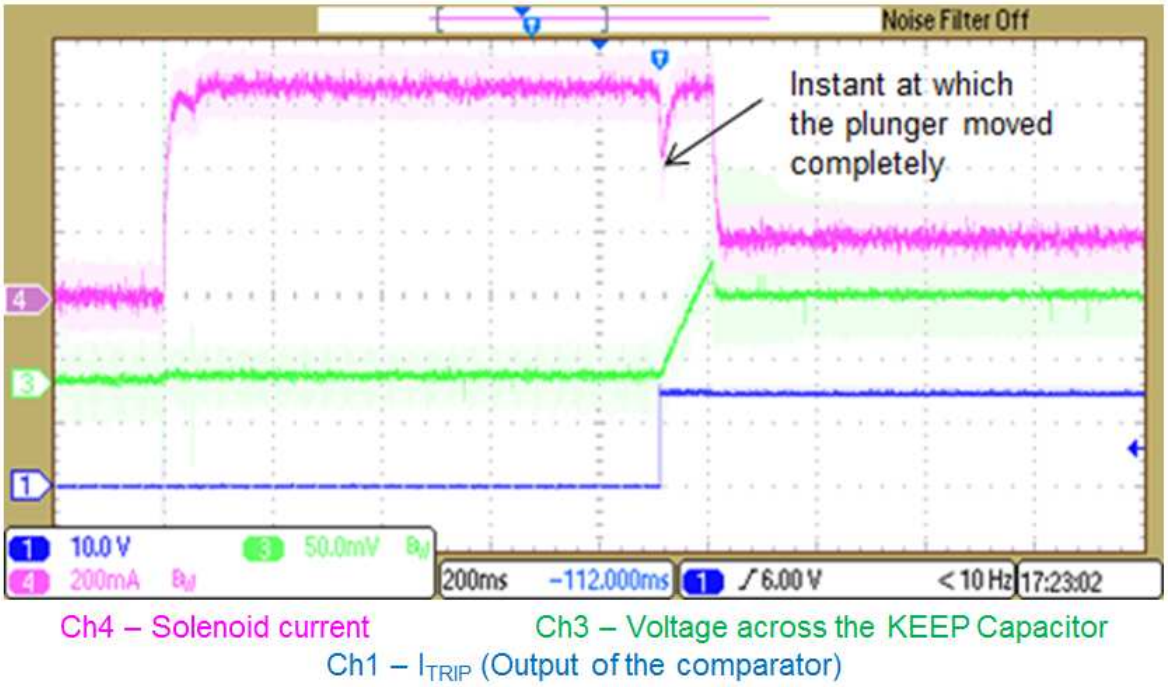

Figure 36. Delayed Movement of Plunger and Detection

Figure 37 shows the different waveforms of the plunger position detection circuit. Ch1 is the non-inverting input of the comparator, which is coming from the peak detector. Ch3 is the inverting input of the comparator, which is the level shifted solenoid current waveform. When the plunger has moved completely, the solenoid current dips to the valley point and the comparator output I_{TRIP} latches to high.

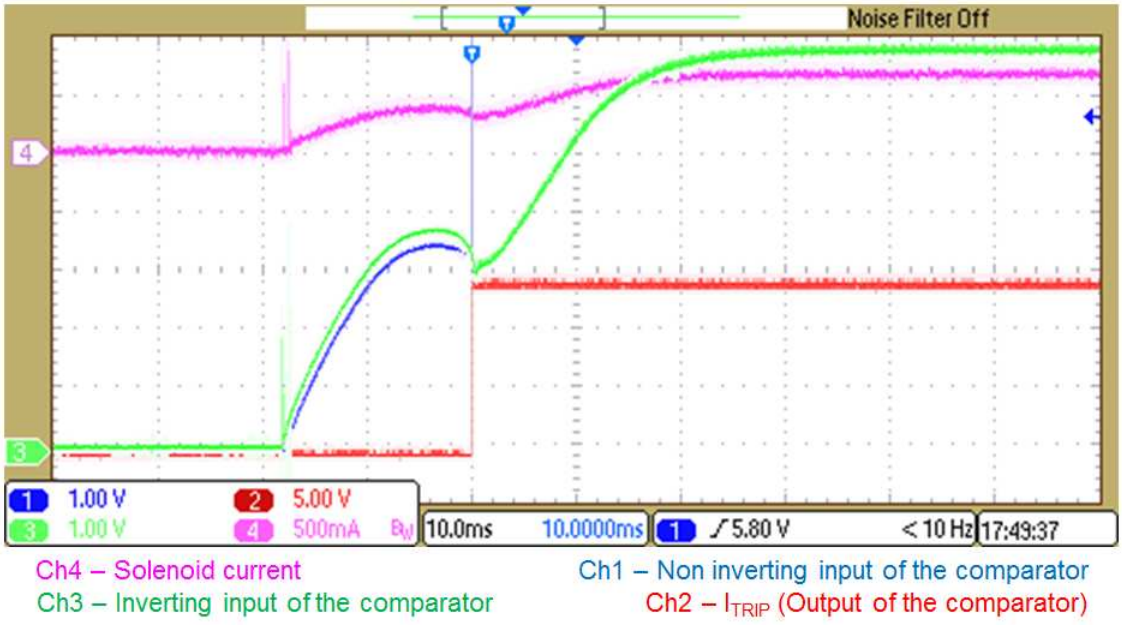

Figure 37. Plunger Position Detection Circuit Waveforms

Copyright © 2014, Texas Instruments Incorporated

The test results of the plunger position detection using the Hall sensor is shown in Figure 38. When the plunger has moved completely, the Hall sensor output is pulled low and the KEEP capacitor start charging.

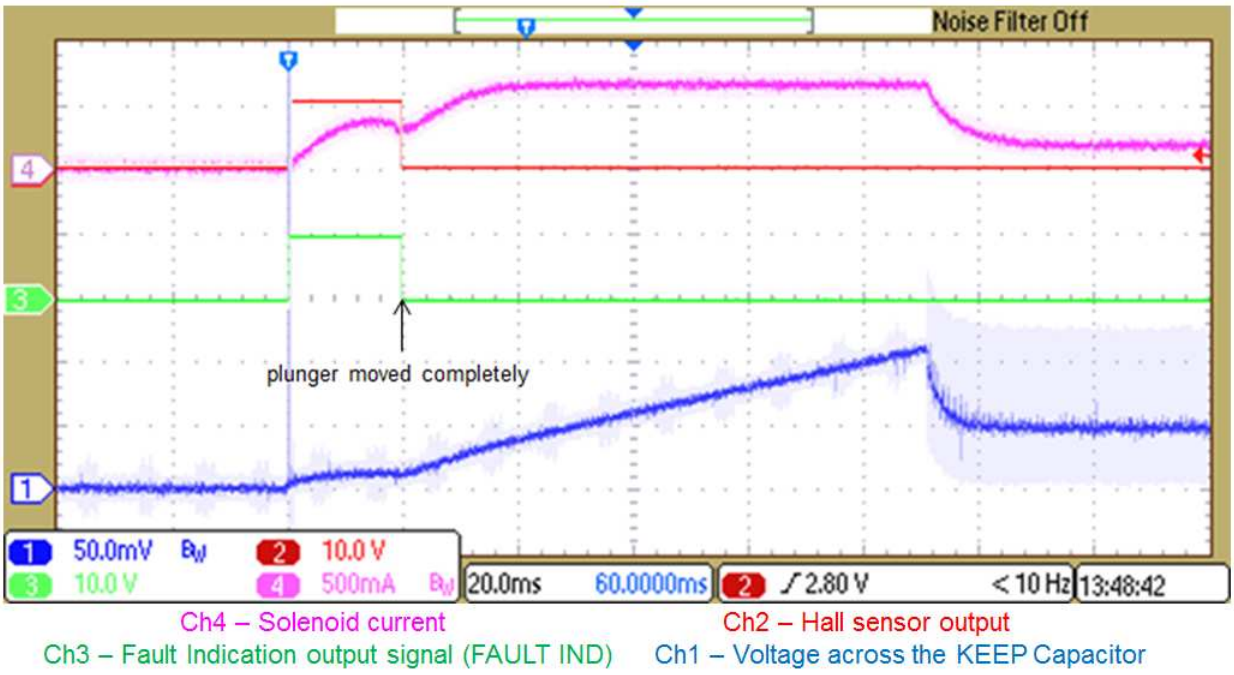

Figure 38. Plunger Position Detection Using Hall Sensor

Copyright © 2014, Texas Instruments Incorporated

Figure 39 to Figure 41 shows the results of the test done at different temperatures. The solenoid and the driver board are kept inside the thermal chamber and tested the complete system at different temperature. The results show that the plunger position detection circuit is properly detecting plunger movement at different temperatures.

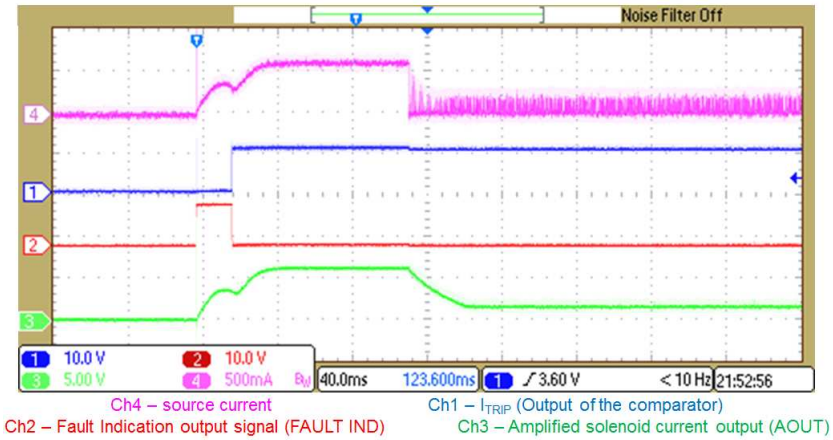

Figure 39. Test Results at 50°C

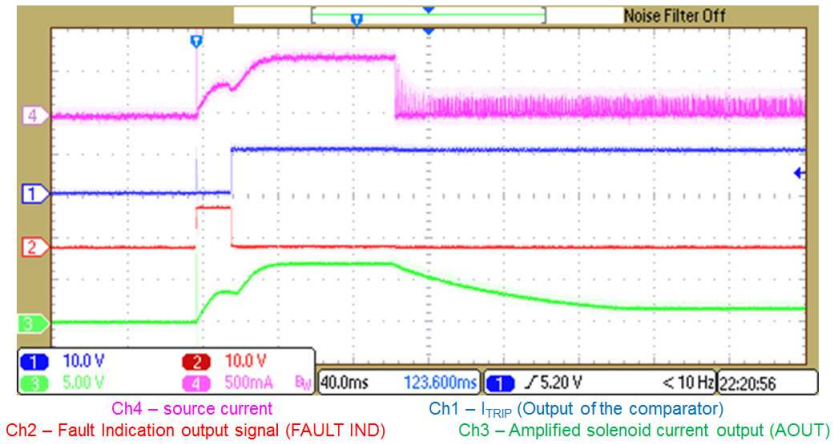

Figure 40. Test Results at 0°C

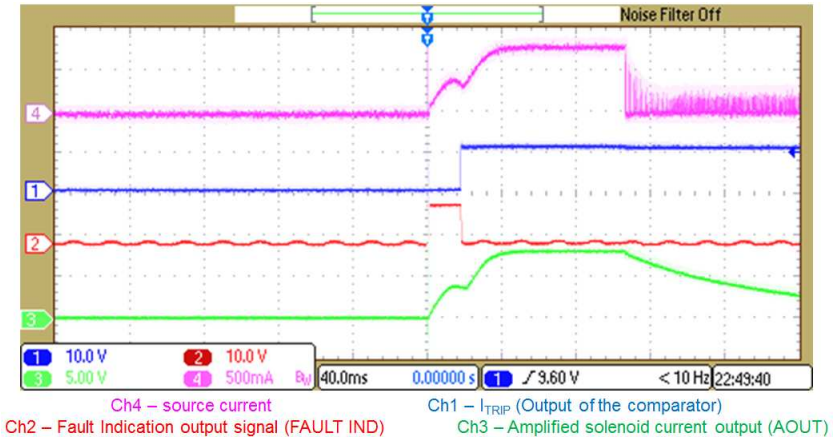

Figure 41. Test Results at –30°C

Copyright © 2014, Texas Instruments Incorporated

Figure 42 to Figure 44 shows the test results at different input voltages. The testing is conducted at 24 V +20% and 24 V –20%. The solenoid current waveform and the plunger position detection circuit output I_{TRIP} is also shown.

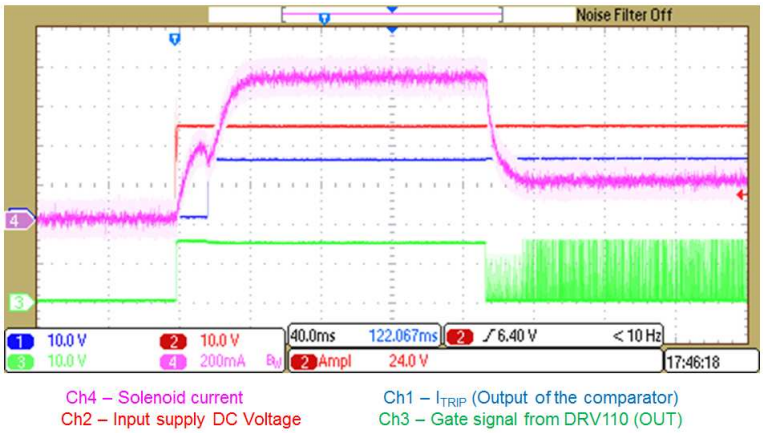

Figure 42. Test Results at 24-V DC Input Source Voltage

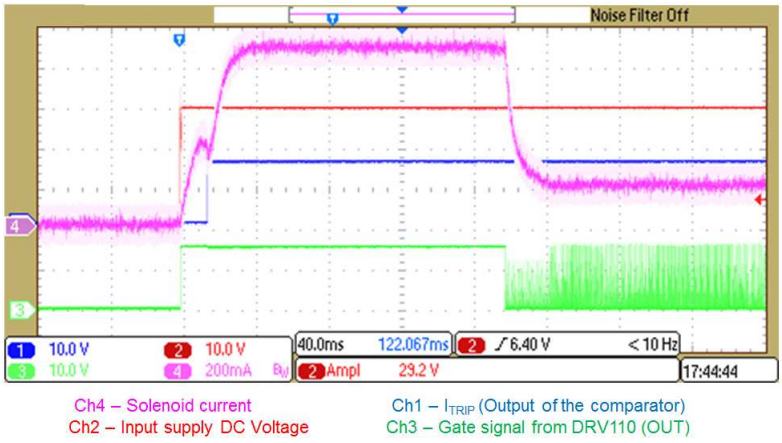

Figure 43. Test Results at 29-V DC Input Source Voltage

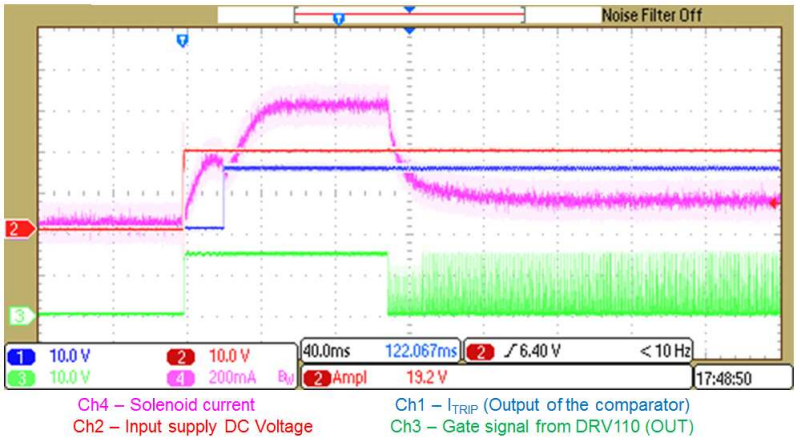

Figure 44. Test Results at 19.2-V DC Input Source Voltage

Copyright © 2014, Texas Instruments Incorporated

6.3 Conducted Emission Test Results

This reference design has been tested for conducted emission (CE) as per EN55011 class A limits. The EMC filter in the input power supply section has been modified for the CE test as shown in Figure 45. Figure 46 and Figure 47 show that the design passes the test with more than a 5-dB margin.

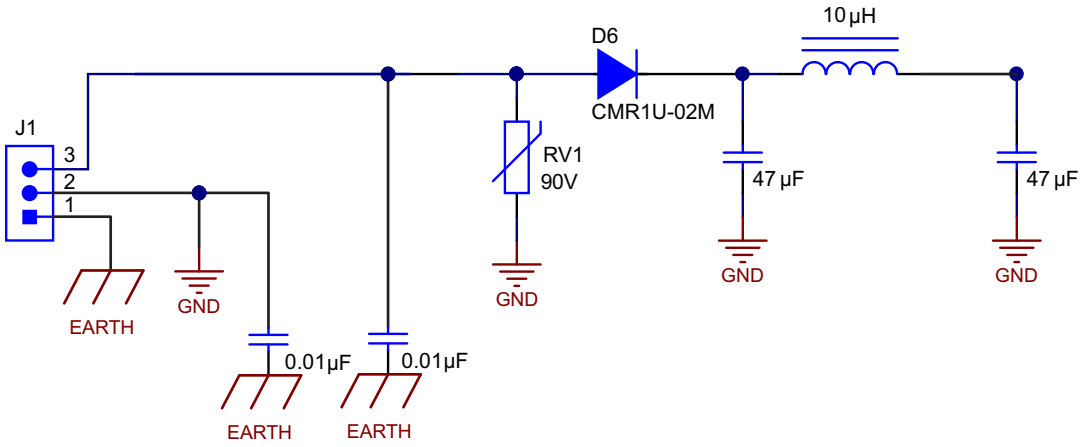

Figure 45. EMC Filter at Power Supply Input

Copyright © 2014, Texas Instruments Incorporated

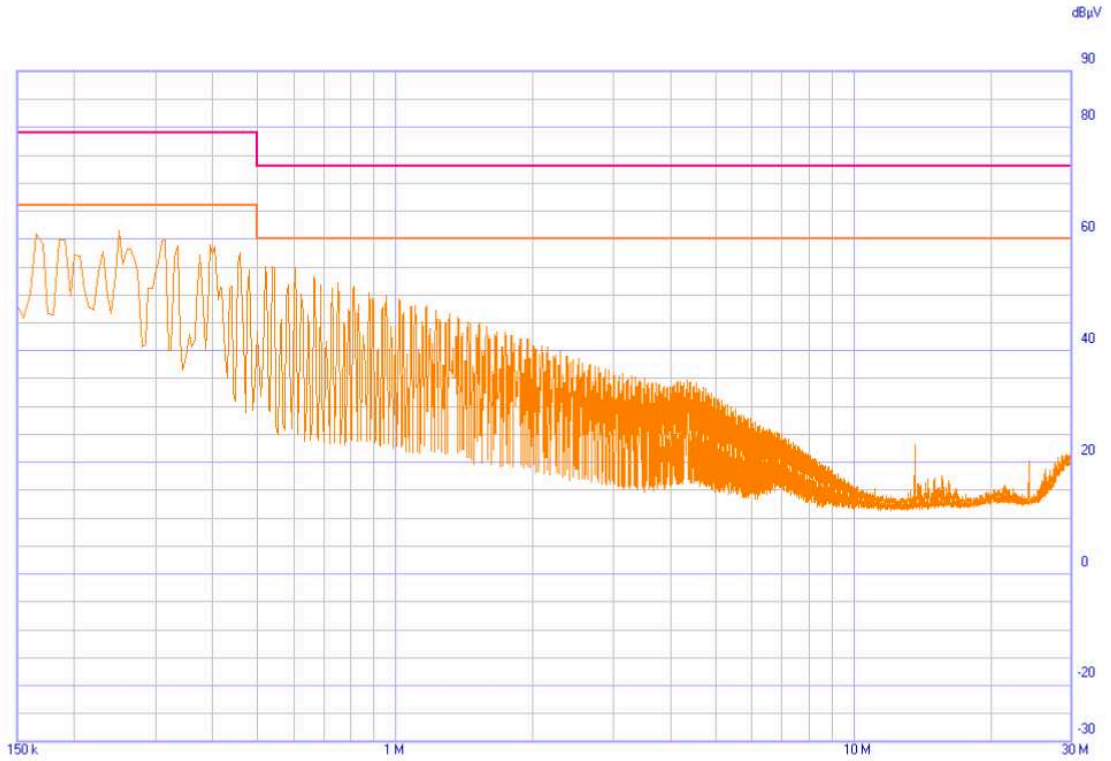

Figure 46. EMC Test Results for Average Detector Output

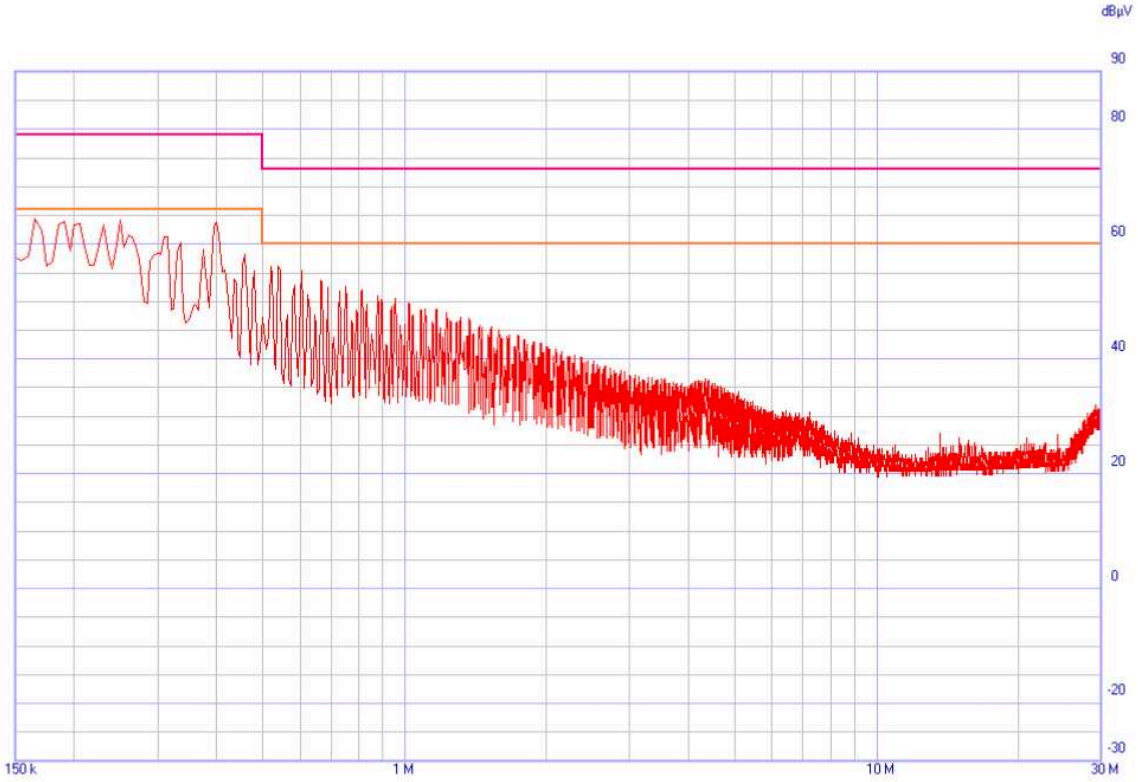

Figure 47. EMC Test Results for Peak Detector Output

Copyright © 2014, Texas Instruments Incorporated

7 Design Files

7.1 Schematics

To download the schematics, see the design files at TIDA-00289.

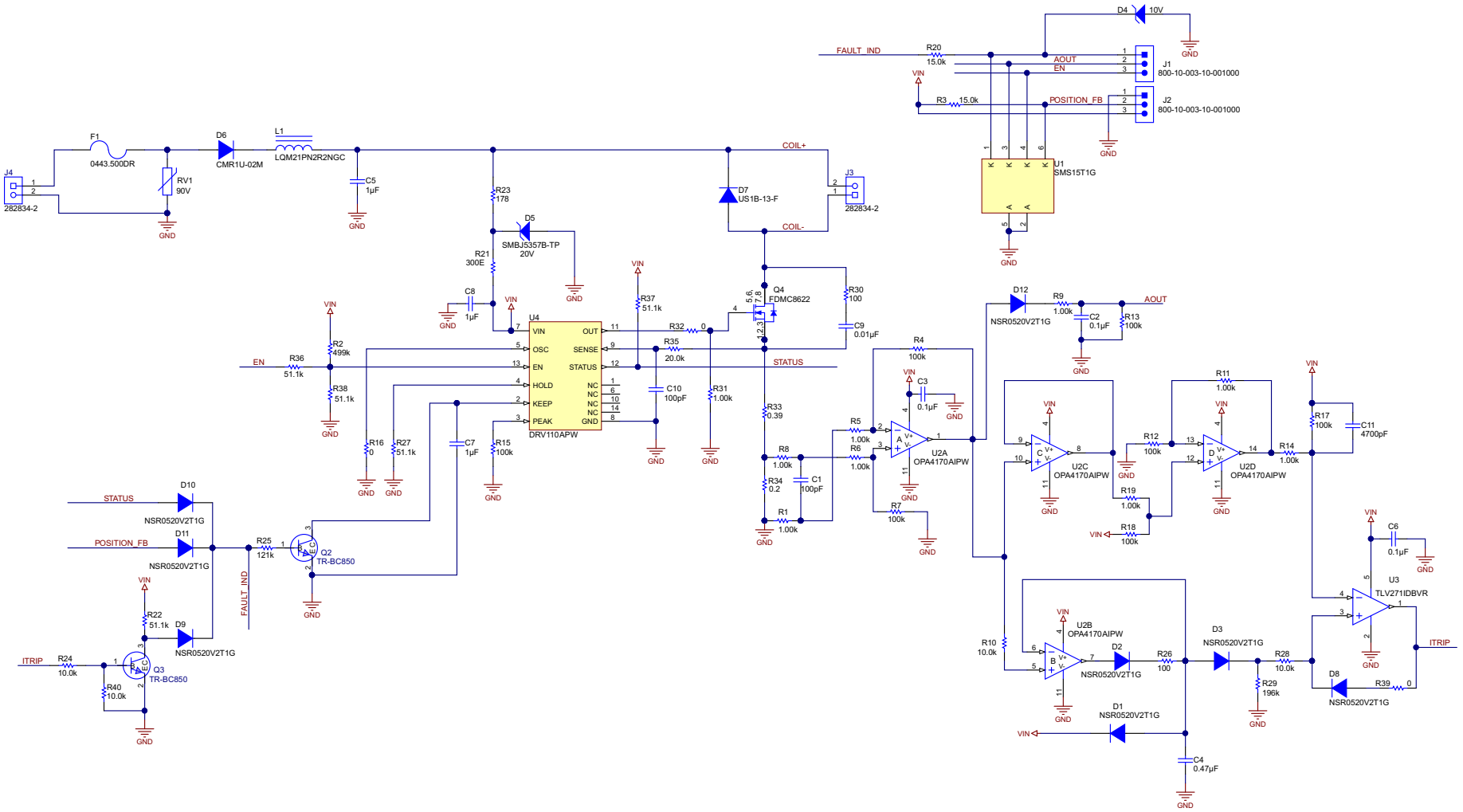

Figure 48. TIDA-00289 Schematic

Copyright © 2014, Texas Instruments Incorporated

7.2 Bill of Materials

To download the bill of materials (BOM), see the design files at TIDA-00289.

Table 4. BOM

QTY	REFERENCE	PART DESCRIPTION	MANUFACTURER	MANUFACTURER PARTNUMBER	PCB FOOTPRINT	NOTE
2	C1, C10	CAP, CERM, 100 pF, 50 V, ±5%, C0G/NP0, 0603	AVX	06035A101JAT2A	0603	Fitted
3	C2, C3, C6	CAP, CERM, 0.1 µF, 25 V, ±10%, X7R, 0603	MuRata	GRM188R71E104KA01D	0603	Fitted
1	C4	CAP, CERM, 0.47 µF, 25 V, ±10%, X7R, 0603	MuRata	GRM188R71E474KA12D	0603	Fitted
1	C5	CAP, CERM, 1 µF, 100 V, ±10%, X7R, 1210	TDK	C3225X7R2A105K200AA	1210	Fitted
1	C7	CAP, CERM, 1 µF, 10 V, ±10%, X5R, 0603	Kemet	C0603C105K8PACTU	0603	Fitted
1	C8	CAP, CERM, 1 µF, 35 V, ±10%, X5R, 0603	Taiyo Yuden	GMK107BJ105KA-T	0603	Fitted
1	C11	CAP, CERM, 4700 pF, 25 V, ±10%, X7R, 0603	MuRata	GRM188R71E472KA01D	0603	Fitted
8	D1, D2, D3, D8, D9, D10, D11, D12	Diode Schottky, 20 V, 0.5 A, SOD523	Diodes Inc.	NSR0520V2T1G	SOD-523	Fitted
1	D4	Diode, Zener, 10 V, 500 mW, SOD-123	Diodes Inc.	MMSZ5240B-7-F	SOD-123	Fitted
1	D5	Diode, Zener, 20 V, 5 W, SMB	Micro Commercial Components	SMBJ5357B-TP	SMB	Fitted
1	D6	Diode, Ultrafast, 200 V, 1 A, SMA	Central Semiconductor	CMR1U-02M	SMA	Fitted
1	D7	Diode, Ultrafast, 100 V, 1 A, SMA	Diodes Inc.	US1B-13-F	SMA	Fitted
1	F1	Fuse, 0.5 A, 250 V, SMD	Littelfuse	0443.500DR	FUSE 10.1 × 3.12 × 3.13 mm	Fitted
2	J1, J2	Conn Header .050" 3POS PCB GOLD	Sullins Connector Solutions	GRPB031VWVN-RC	CONN HEADER .050" 3POS, TH	Fitted
2	J3, J4	Terminal Block, 2×1, 2.54 mm, TH	TE Connectivity	282834-2	Terminal Block, 2×1, 2.54 mm, TH	Fitted
1	L1	Inductor, Shielded, Ferrite, 2.2 µH, 0.8 A, 0.23 Ω, SMD	MuRata	LQM21PN2R2NGC	0805	Fitted
2	Q2, Q3	TRANS NPN LP 100 mA, 45 V SOT23	ON Semiconductor	BC850CLT1G	SOT-23-3	Fitted
1	Q4	MOSFET N-CH 100 V, 4 A, POWER33	Fairchild Semiconductor	FDMC8622	8-MLP	Fitted
8	R1, R5, R6, R8, R9, R11, R14, R19	RES, 1.00 kΩ, 1%, 0.1 W, 0603	Yageo America	RC0603FR-071KL	0603	Fitted
1	R2	RES, 499 k, 1%, 0.1 W, 0603	Vishay-Dale	CRCW0603499KFKEA	0603	Fitted
2	R3, R20	RES, 15.0 k, 1%, 0.1 W, 0603	Vishay-Dale	CRCW060315K0FKEA	0603	Fitted
7	R4, R7, R12, R13, R15, R17, R18	RES, 100 k, 1%, 0.1 W, 0603	Vishay-Dale	CRCW0603100KFKEA	0603	Fitted

Copyright © 2014, Texas Instruments Incorporated

Table 4. BOM (continued)

QTY	REFERENCE	PART DESCRIPTION	MANUFACTURER	MANUFACTURER PARTNUMBER	PCB FOOTPRINT	NOTE
4	R10, R24, R28, R40	RES, 10.0 kΩ, 0.1%, 0.1W, 0603	Yageo America	RT0603BRD0710KL	0603	Fitted
3	R16, R32, R39	RES, 0 Ω, 5%, 0.1 W, 0603	Vishay-Dale	CRCW06030000Z0EA	0603	Fitted
1	R21	RES 300 Ω, 1/2 W 5% 1210 SMD	Panasonic Electronic Components	ERJ-14YJ301U	1210	Fitted
5	R22, R27, R36, R37, R38	RES, 51.1 k, 1%, 0.1 W, 0603	Vishay-Dale	CRCW060351K1FKEA	0603	Fitted
1	R23	RES, 178 Ω, 1%, 0.75 W, 2010	Vishay-Dale	CRCW2010178RFKEF	2010	Fitted
1	R25	RES, 121 k, 1%, 0.1 W, 0603	Vishay-Dale	CRCW0603121KFKEA	0603	Fitted
1	R26	RES, 100, 1%, 0.1 W, 0603	Vishay-Dale	CRCW0603100RFKEA	0603	Fitted
1	R29	RES, 196 k, 1%, 0.1 W, 0603	Vishay-Dale	CRCW0603196KFKEA	0603	Fitted
1	R33	RES, 0.39 Ω, 1%, 0.5 W, 1210	Rohm	MCR25JZHFLR390	1210	Fitted
1	R34	RES, 0.2 Ω, 1%, 0.5 W, 1210	Rohm	MCR25JZHFLR200	1210	Fitted
1	R35	RES, 20.0 k, 1%, 0.1 W, 0603	Vishay-Dale	CRCW060320K0FKEA	0603	Fitted
1	RV1	Varistor 90 V, 2.5 KA, DISC 10MM	Bourns Inc.	V100ZA4P	Varistor, TH, 10 MM	Fitted
1	U1	TVS Diode 15VWM 29VC SC746	ON Semiconductor.	SMS15T1G	SC-74	Fitted
1	U2	36-V, Single-Supply, SOT553, Low-Power Operational Amplifiers Value Line Series, PW0014A	Texas Instruments	OPA4170AIPW	PW0014A	Fitted
1	U3	550 µA/Ch, 3 MHz, Rail-to-Rail Output Operational Amplifier, 2.7 to 16 V, –40°C to 125°C, 5-pin SOT23 (DBV0005A), Green (RoHS and no Sb/Br)	Texas Instruments	TLV271IDBVR	DBV0005A	Fitted
1	U4	Power Saving Solenoid Controller With Integrated Supply Regulation, PW0014A	Texas Instruments	DRV110APW	PW0014A	Fitted
0	C9	CAP, CERM, 0.01 µF, 100 V, ±10%, X7R, 0805	AVX	08051C103KAT2A	0805	Not Fitted
0	R30	RES, 100 Ω, 0.1%, 0.125 W, 0805	Yageo America	RT0805BRD07100RL	0805	Not Fitted
0	R31	RES, 1.00 kΩ, 1%, 0.1 W, 0603	Yageo America	RC0603FR-071KL	0603	Not Fitted

Copyright © 2014, Texas Instruments Incorporated

7.3 Layer Plots

To download the layer plots, see the design files at TIDA-00289.

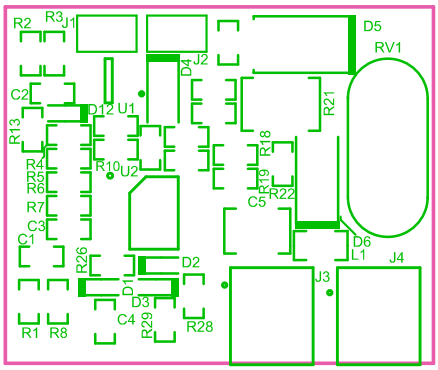

Figure 49. Top Overlay

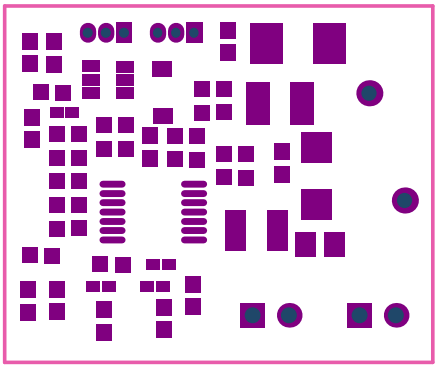

Figure 50. Top Solder

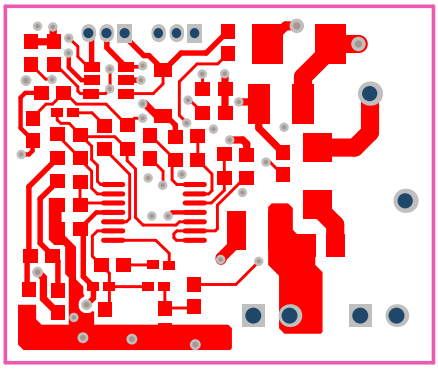

Figure 51. Top Layer

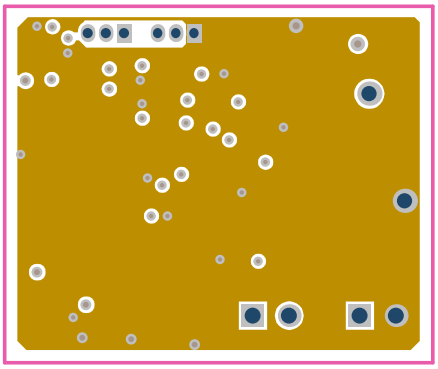

Figure 52. Mid1 Layer (GND)

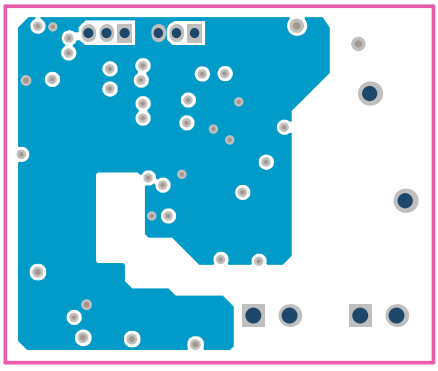

Figure 53. Mid2 Layer (PWR)

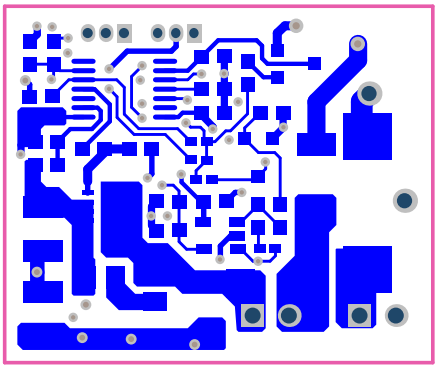

Figure 54. Bottom Layer

Copyright © 2014, Texas Instruments Incorporated

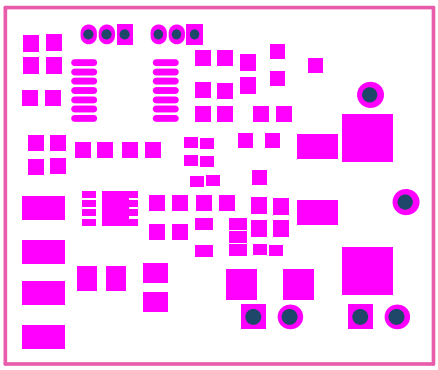

Figure 55. Bottom Solder

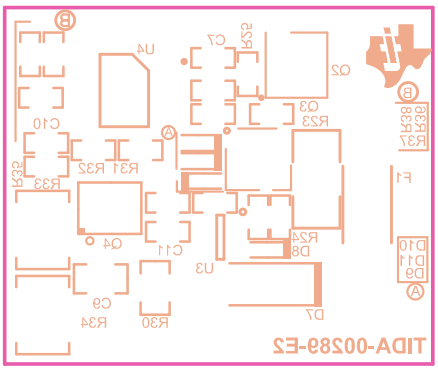

Figure 56. Bottom Overlay

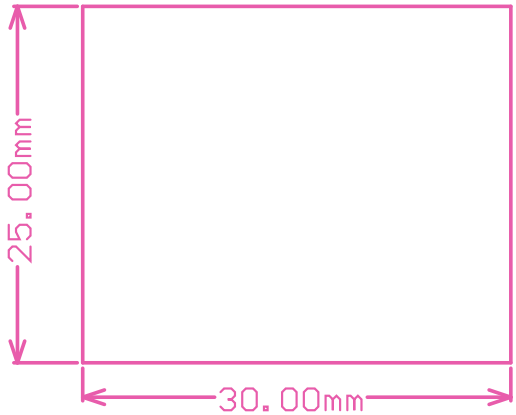

Figure 57. Board Dimensions

7.4 Altium Project

To download the Altium project files, see the design files at TIDA-00289.

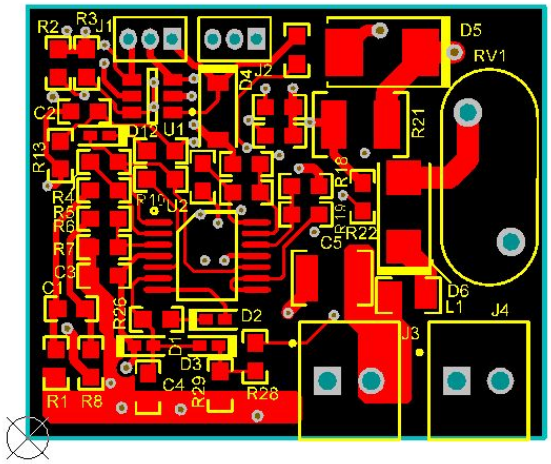

Figure 58. Top Layer

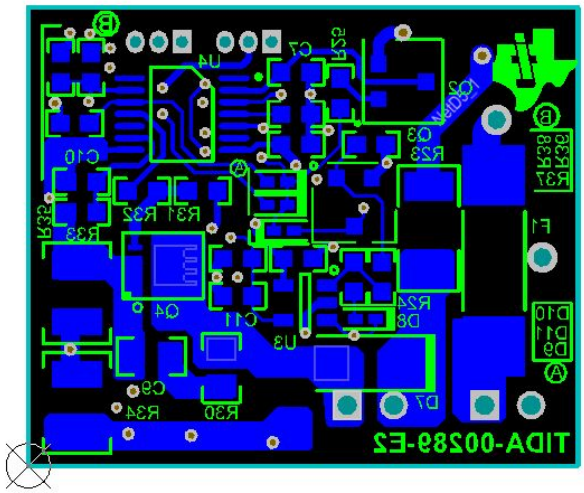

Figure 59. Bottom Layer

Copyright © 2014, Texas Instruments Incorporated

7.5 Gerber Files

To download the Gerber files, see the design files at TIDA-00289.

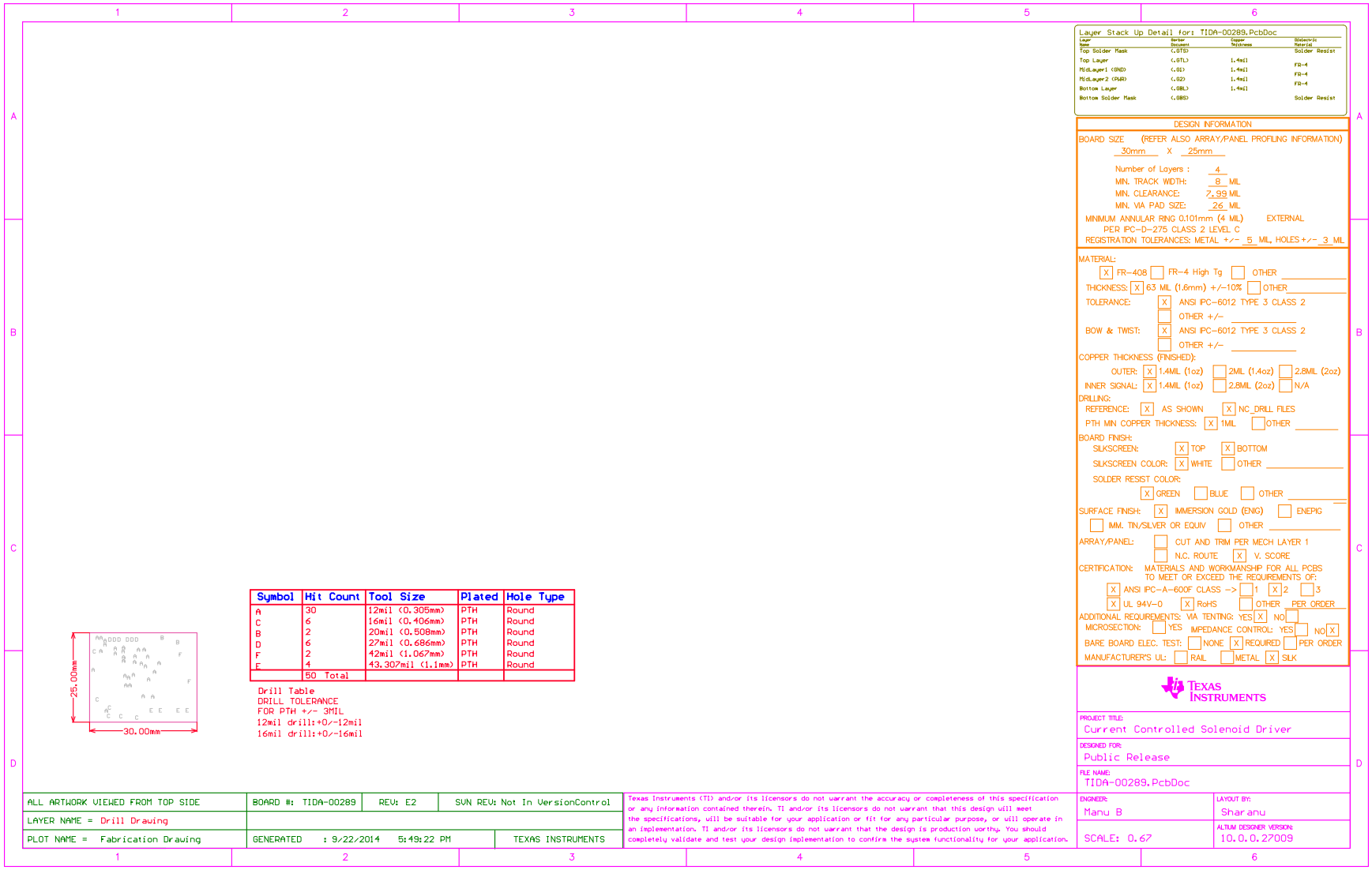

Figure 60. Fabrication Drawing

Copyright © 2014, Texas Instruments Incorporated

7.6 Assembly Drawings

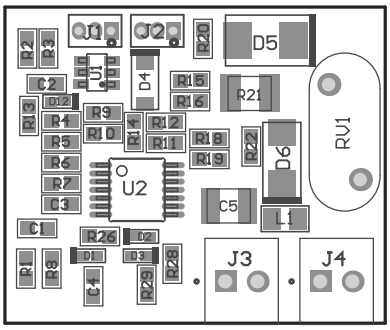

Figure 61. Top Assembly Drawing

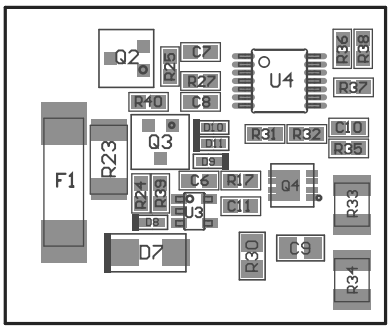

Figure 62. Bottom Assembly Drawing

8 References

1. Texas Instruments, *DRV110 and DRV120 Evaluation Modules (EVM)*, DRV110 User's Guide (SLVU686B)
2. Texas Instruments, *Power Saving Solenoid Controller With Integrated Supply Regulation*, DRV110 Datasheet (SLVSBA8A)
3. Texas Instruments, *Driving solenoid coils efficiently in switchgear applications,* Application Note (SLYT544)

9 About the Author

MANU BALAKRISHNAN is a systems engineer at Texas Instruments where he is responsible for developing subsystem design solutions for the Industrial Motor Drive segment. Manu brings to this role his experience in power electronics, analog, and mixed signal designs. He has system level product design experience in permanent magnet motor drives. Manu earned his bachelor of technology in electrical and electronics engineering from the University of Kerala and his master of technology in power electronics from National Institute of Technology, Calicut.

N. NAVANEETH KUMAR is a systems architect at Texas Instruments where he is responsible for developing subsystem solutions for motor controls within Industrial Systems. N. Navaneeth brings to this role his extensive experience in power electronics, EMC, analog, and mixed signal designs. He has system-level product design experience in drives, solar inverters, UPS, and protection relays. N. Navaneeth earned his bachelor of electronics and communication engineering from Bharathiar University, India and his master of science in electronic product development from Bolton University, UK.

Copyright © 2014, Texas Instruments Incorporated

IMPORTANT NOTICE FOR TI REFERENCE DESIGNS

Texas Instruments Incorporated ("TI") reference designs are solely intended to assist designers (“Buyers”) who are developing systems that incorporate TI semiconductor products (also referred to herein as “components”). Buyer understands and agrees that Buyer remains responsible for using its independent analysis, evaluation and judgment in designing Buyer’s systems and products.

TI reference designs have been created using standard laboratory conditions and engineering practices. **TI has not conducted any testing other than that specifically described in the published documentation for a particular reference design.** TI may make corrections, enhancements, improvements and other changes to its reference designs.

Buyers are authorized to use TI reference designs with the TI component(s) identified in each particular reference design and to modify the reference design in the development of their end products. HOWEVER, NO OTHER LICENSE, EXPRESS OR IMPLIED, BY ESTOPPEL OR OTHERWISE TO ANY OTHER TI INTELLECTUAL PROPERTY RIGHT, AND NO LICENSE TO ANY THIRD PARTY TECHNOLOGY OR INTELLECTUAL PROPERTY RIGHT, IS GRANTED HEREIN, including but not limited to any patent right, copyright, mask work right, or other intellectual property right relating to any combination, machine, or process in which TI components or services are used. Information published by TI regarding third-party products or services does not constitute a license to use such products or services, or a warranty or endorsement thereof. Use of such information may require a license from a third party under the patents or other intellectual property of the third party, or a license from TI under the patents or other intellectual property of TI.

TI REFERENCE DESIGNS ARE PROVIDED "AS IS". TI MAKES NO WARRANTIES OR REPRESENTATIONS WITH REGARD TO THE REFERENCE DESIGNS OR USE OF THE REFERENCE DESIGNS, EXPRESS, IMPLIED OR STATUTORY, INCLUDING ACCURACY OR COMPLETENESS. TI DISCLAIMS ANY WARRANTY OF TITLE AND ANY IMPLIED WARRANTIES OF MERCHANTABILITY, FITNESS FOR A PARTICULAR PURPOSE, QUIET ENJOYMENT, QUIET POSSESSION, AND NON-INFRINGEMENT OF ANY THIRD PARTY INTELLECTUAL PROPERTY RIGHTS WITH REGARD TO TI REFERENCE DESIGNS OR USE THEREOF. TI SHALL NOT BE LIABLE FOR AND SHALL NOT DEFEND OR INDEMNIFY BUYERS AGAINST ANY THIRD PARTY INFRINGEMENT CLAIM THAT RELATES TO OR IS BASED ON A COMBINATION OF COMPONENTS PROVIDED IN A TI REFERENCE DESIGN. IN NO EVENT SHALL TI BE LIABLE FOR ANY ACTUAL, SPECIAL, INCIDENTAL, CONSEQUENTIAL OR INDIRECT DAMAGES, HOWEVER CAUSED, ON ANY THEORY OF LIABILITY AND WHETHER OR NOT TI HAS BEEN ADVISED OF THE POSSIBILITY OF SUCH DAMAGES, ARISING IN ANY WAY OUT OF TI REFERENCE DESIGNS OR BUYER’S USE OF TI REFERENCE DESIGNS.

TI reserves the right to make corrections, enhancements, improvements and other changes to its semiconductor products and services per JESD46, latest issue, and to discontinue any product or service per JESD48, latest issue. Buyers should obtain the latest relevant information before placing orders and should verify that such information is current and complete. All semiconductor products are sold subject to TI’s terms and conditions of sale supplied at the time of order acknowledgment.

TI warrants performance of its components to the specifications applicable at the time of sale, in accordance with the warranty in TI’s terms and conditions of sale of semiconductor products. Testing and other quality control techniques for TI components are used to the extent TI deems necessary to support this warranty. Except where mandated by applicable law, testing of all parameters of each component is not necessarily performed.

TI assumes no liability for applications assistance or the design of Buyers’ products. Buyers are responsible for their products and applications using TI components. To minimize the risks associated with Buyers’ products and applications, Buyers should provide adequate design and operating safeguards.

Reproduction of significant portions of TI information in TI data books, data sheets or reference designs is permissible only if reproduction is without alteration and is accompanied by all associated warranties, conditions, limitations, and notices. TI is not responsible or liable for such altered documentation. Information of third parties may be subject to additional restrictions.

Buyer acknowledges and agrees that it is solely responsible for compliance with all legal, regulatory and safety-related requirements concerning its products, and any use of TI components in its applications, notwithstanding any applications-related information or support that may be provided by TI. Buyer represents and agrees that it has all the necessary expertise to create and implement safeguards that anticipate dangerous failures, monitor failures and their consequences, lessen the likelihood of dangerous failures and take appropriate remedial actions. Buyer will fully indemnify TI and its representatives against any damages arising out of the use of any TI components in Buyer’s safety-critical applications.

In some cases, TI components may be promoted specifically to facilitate safety-related applications. With such components, TI’s goal is to help enable customers to design and create their own end-product solutions that meet applicable functional safety standards and requirements. Nonetheless, such components are subject to these terms.

No TI components are authorized for use in FDA Class III (or similar life-critical medical equipment) unless authorized officers of the parties have executed an agreement specifically governing such use.

Only those TI components that TI has specifically designated as military grade or “enhanced plastic” are designed and intended for use in military/aerospace applications or environments. Buyer acknowledges and agrees that any military or aerospace use of TI components that have ***not*** been so designated is solely at Buyer's risk, and Buyer is solely responsible for compliance with all legal and regulatory requirements in connection with such use.

TI has specifically designated certain components as meeting ISO/TS16949 requirements, mainly for automotive use. In any case of use of non-designated products, TI will not be responsible for any failure to meet ISO/TS16949.

Mailing Address: Texas Instruments, Post Office Box 655303, Dallas, Texas 75265
Copyright © 2014, Texas Instruments Incorporated