EN: This Datasheet/Document is presented by the manufacturer.

Please visit our website for pricing and availability at www.hestore.hu.

128, av. du Maréchal-de-Lattre-de-Tassigny - 87045 LIMOGES Cedex
Tel: 0 (+33) 5 55 06 87 87 - Fax: 0 (+33) 5 55 06 88 88
www.legrand.com

Suno™
Surface mounting boxes

Cat. No(s): 7 21X 94/95

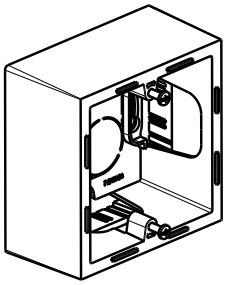

7 21X 94

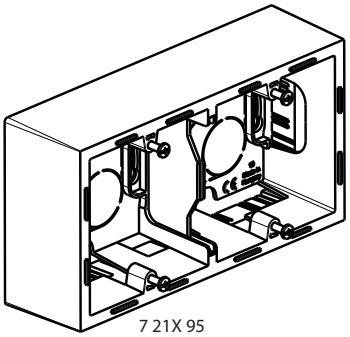

7 21X 95

1. USE

Horizontal or vertical mounting.
Entry for installation on 15x10 mm, 20x10 mm, 32x15, 40x15 mm mini trunking and Ø 20 mm conduit.
Boxes receive composable mechanisms.

2. RANGE

Description	White	Ivory	Aluminium	Black
Surface mounting boxe 1-gang	7 211 94	7 212 94	7 213 94	7 214 94
Surface mounting boxe* 2-gang	7 211 95	7 212 95	7 213 95	7 214 95

* 2-gang boxe supplied with divider for low and high current.

3. OVERALL DIMENSIONS (mm)

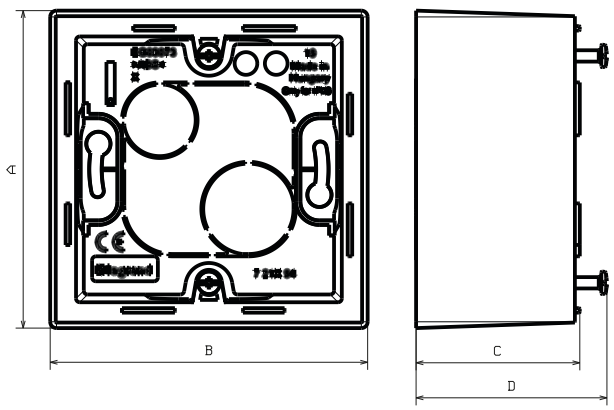

References	A	B	C	D
7 21X 94	83,95	83,95	43,3	50,5
7 21X 95	83,95	155	43,3	50,5

4. TECHNICAL CHARACTERISTICS

Material: ABS
Divider: PC
Colours: White RAL 903
Ivory RAL 113
Painted aluminium (C010B)
Painted black (C014A)