EN: This Datasheet/Document is presented by the manufacturer.

Please visit our website for pricing and availability at www.hestore.hu.

ISL95521B

Hybrid Power Boost (HPB) and Narrow VDC (NVDC) Combo Battery Charger with SMBus Interface

FN8952
Rev.1.00
Jul 19, 2019

The ISL95521B is a highly versatile combo battery charger configurable for operating as either a Hybrid Power Boost (HPB) charger or a Narrow VDC (NVDC) charger, supporting 2-, 3-, or 4-cell batteries. Both configurations allow the battery to work with the adapter to supply the system load when it exceeds the adapter capability, referred to as system Turbo mode. The HPB charger configuration reverse-boosts battery energy to the system bus to help the adapter provide the system power in Turbo mode. The NVDC charger configuration quickly turns on BGATE to enable the battery to help the adapter provide the system power in Turbo mode.

The ISL95521B uses N-channel MOSFETs (NFETs) for all the switches to achieve the best performance and lowest BOM cost. The internal charge pump is capable of turning on all the NFETs fast or slow, depending on the circumstance or the need. The ability to quickly turn on NFETs prevents system bus voltage drop when the battery is suddenly removed in Turbo mode or in Battery Learn mode.

The ISL95521B provides many protection features including a PROCHOT# indicator for system low voltage, adapter overcurrent, battery overcurrent, or overheating, with an array of SMBus programmable parameters for maximum flexibility. The ISL95521B also features a hardware-based adapter-current limit and battery-current limit in addition to SMBus programmable limits.

The ISL95521B provides a high accuracy adapter current monitor, battery current monitor, and system power monitor outputs. To provide maximum flexibility for working with high and low power systems, the ISL95521B provides several configurable current-sense resistor value options to achieve the best trade-off of current sensing accuracy vs power loss.

The ISL95521B uses the Renesas Robust Ripple Regulator (R3™) modulation scheme to provide excellent light-load efficiency and fast dynamic response.

Features

- Configurable as an HPB charger or NVDC charger
- Compliant with Intel PROCHOT# and PSYS requirements
- Adapter current monitor and battery discharging current monitor
- Uses NFET for all the switches
  - Supports battery removal during Battery Learn mode
  - Actively controlled inrush current to prevent FET damage
- SMBus programmable settings and high accuracy
- Comprehensive protection features:
  - PROCHOT# indicator for system low voltage, adapter overcurrent, battery overcurrent, or system overheating
  - Hardware-based adapter current and battery current limits
  - Supports sudden battery removal in system Turbo mode
- 16 switching frequency options from 350kHz to 1MHz
- Low quiescent current
- SMBus and auto-increment I^2C compatible
- Robust Ripple Regulator (R3) modulation scheme provides excellent light-load efficiency and fast dynamic response
- 32 Ld 4mm x 4mm QFN package
- Pb-free (RoHS compliant)

Applications

- Devices with rechargeable 2-, 3-, or 4-cell batteries

Related Literature

For a full list of related documents, visit our website:

- ISL95521B product page

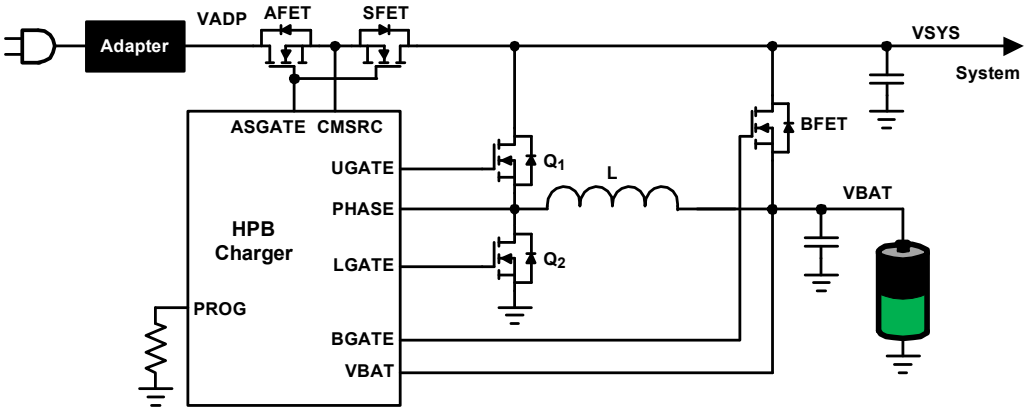

Figure 1. HPB Charger Configuration

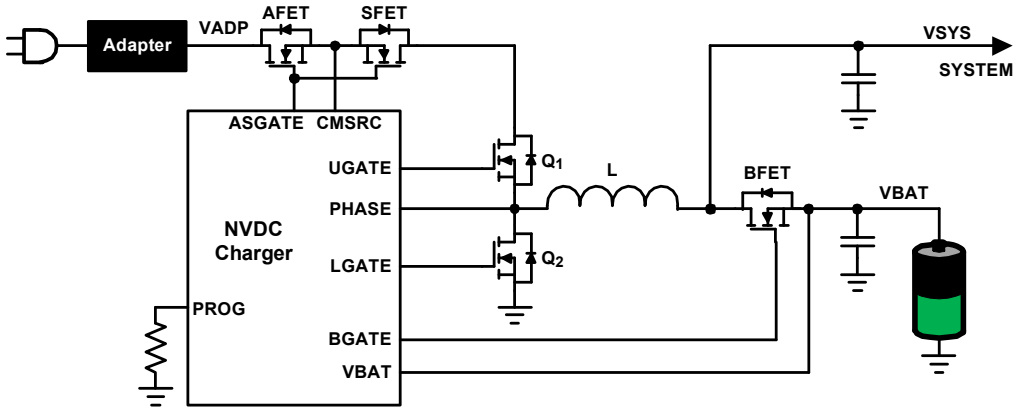

Figure 2. NVDC Charger Configuration

Contents

1. Overview . . . 5

1.1 Block Diagram . . . 5
1.2 Simplified Application Circuits . . . 6
1.3 Ordering Information . . . 10
1.4 Pin Configuration . . . 11
1.5 Pin Descriptions . . . 11

2. Specifications . . . 13

2.1 Absolute Maximum Ratings . . . 13
2.2 Thermal Information . . . 13
2.3 Recommended Operation Conditions . . . 14
2.4 Electrical Specifications . . . 14
2.5 Gate Driver Timing Diagram . . . 25

3. Typical Performance . . . 26

4. General SMBus Architecture . . . 31

4.1 Data Validity . . . 31
4.2 Start and Stop Conditions . . . 31
4.3 Acknowledge . . . 32
4.4 SMBus Transactions . . . 32
4.5 Byte Format . . . 32
4.6 SMBus and I^2C Compatibility . . . 32

5. ISL95521B SMBus Commands . . . 33

5.1 Setting Charging Current Limit . . . 34
5.2 Setting Adapter Current Limit . . . 35
5.3 Setting Two-Level Adapter Current Limit Duration . . . 36
5.4 Setting Maximum Charging Voltage . . . 36
5.5 Setting Minimum Charging Voltage . . . 37
5.6 Setting PROCHOT# Debounce Time . . . 38
5.7 Setting PROCHOT# Duration . . . 38
5.8 Setting PROCHOT# Threshold for Adapter Overcurrent Condition . . . 38
5.9 Setting PROCHOT# Threshold for Battery Over-Discharging Current Condition . . . 39
5.10 Control Registers . . . 40
5.11 Information Registers . . . 44

6. Application Information . . . 46

6.1 R3 Modulator . . . 46
6.2 Programming Charger Options . . . 48
6.3 Programming Switching Frequency . . . 50
6.4 Soft-Start . . . 50
6.5 Adapter Presence Detection and ACOK . . . 52

6.6 Adapter Overvoltage Protection . . . 52
6.7 Power Source Selection . . . 52
6.8 Battery Learn Mode . . . 53
6.9 HPB Charger Battery Learn Mode Entry/Exit . . . 53
6.10 NVDC Charger Battery Learn Mode Entry/Exit . . . 53
6.11 Hardware-Based Adapter Current Limit . . . 53
6.12 HPB Charger Turbo Mode Support . . . 54
6.13 NVDC Charger Turbo Mode Support . . . 55
6.14 Two-Level Adapter Current Limit . . . 56
6.15 Current Monitor . . . 56
6.16 PSYS Monitor . . . 56
6.17 Charger Timeout . . . 57
6.18 Trickle Charging . . . 57
6.19 NVDC Charger System Voltage Regulation . . . 57
6.20 Charging Current WOCP . . . 58
6.21 Over-Temperature Protection . . . 58
6.22 Battery Overvoltage Protection . . . 59
6.23 System Bus Short-Circuit Detection . . . 59
6.24 Adapter Input Filter . . . 60
6.25 Test with e-Load Constant Voltage Mode . . . 60

7. General Application Information . . . 61
7.1 Select the LC Output Filter . . . 61
7.2 Select the Input Capacitor . . . 61
7.3 Select the Switching Power MOSFET . . . 62
7.4 Select the Bootstrap Capacitor . . . 63
7.5 Select the DCIN Filter . . . 63

8. Layout Guidelines . . . 66

9. Revision History . . . 68

10. Package Outline Drawing . . . 69

1. Overview

1.1 Block Diagram

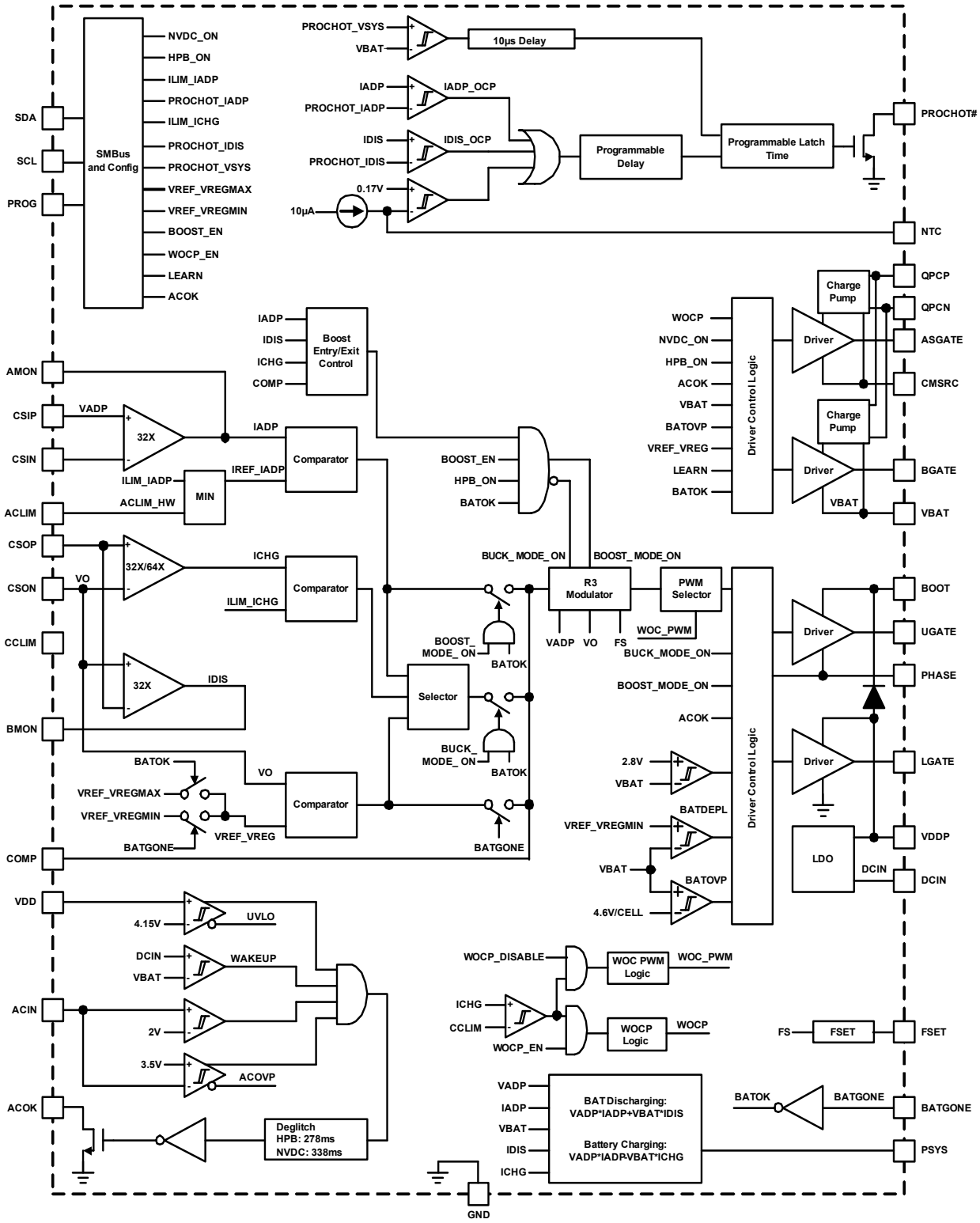

Figure 3. Block Diagram

1.2 Simplified Application Circuits

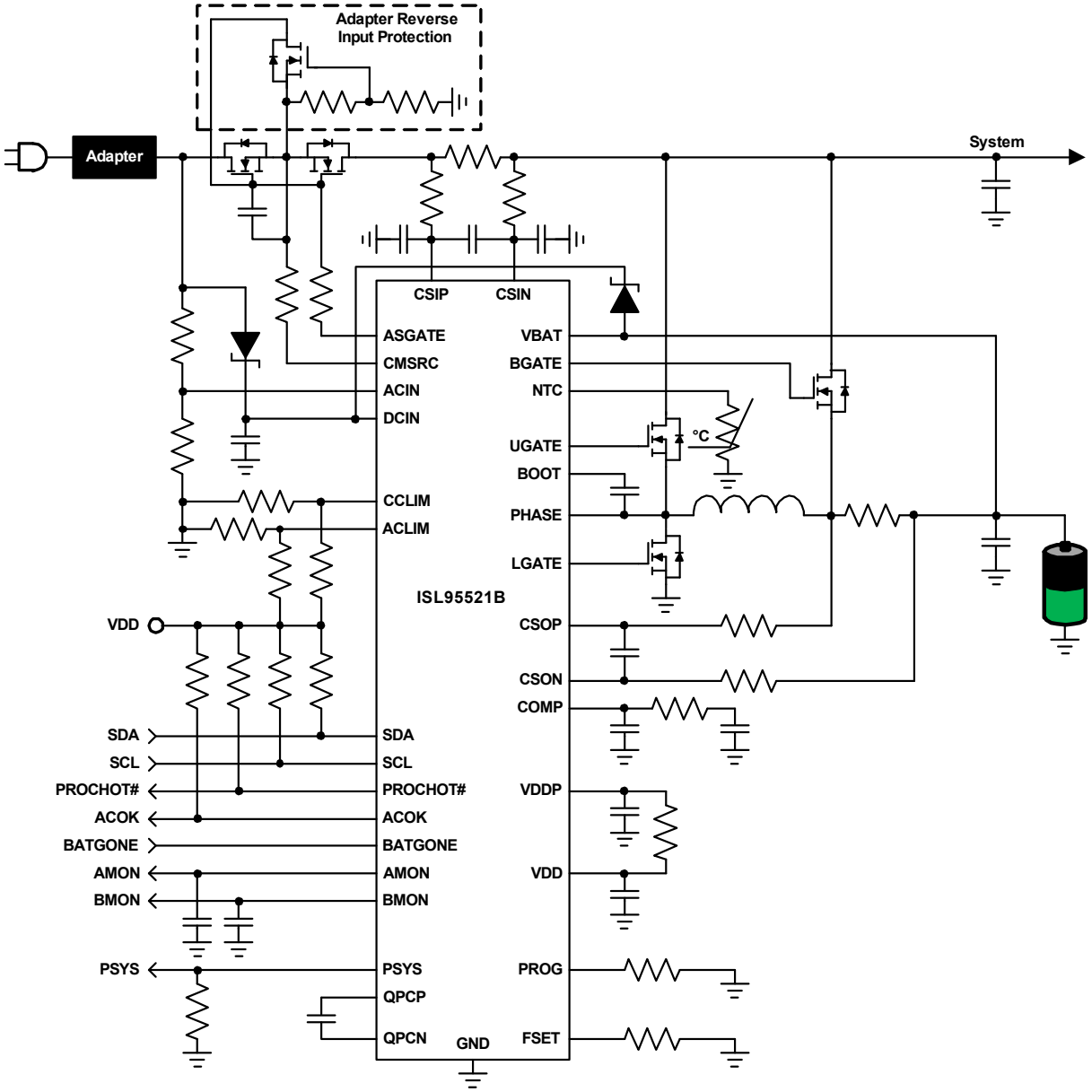

Figure 4. Typical Application Circuit: HPB Charger Configuration with Two NMOS Selectors

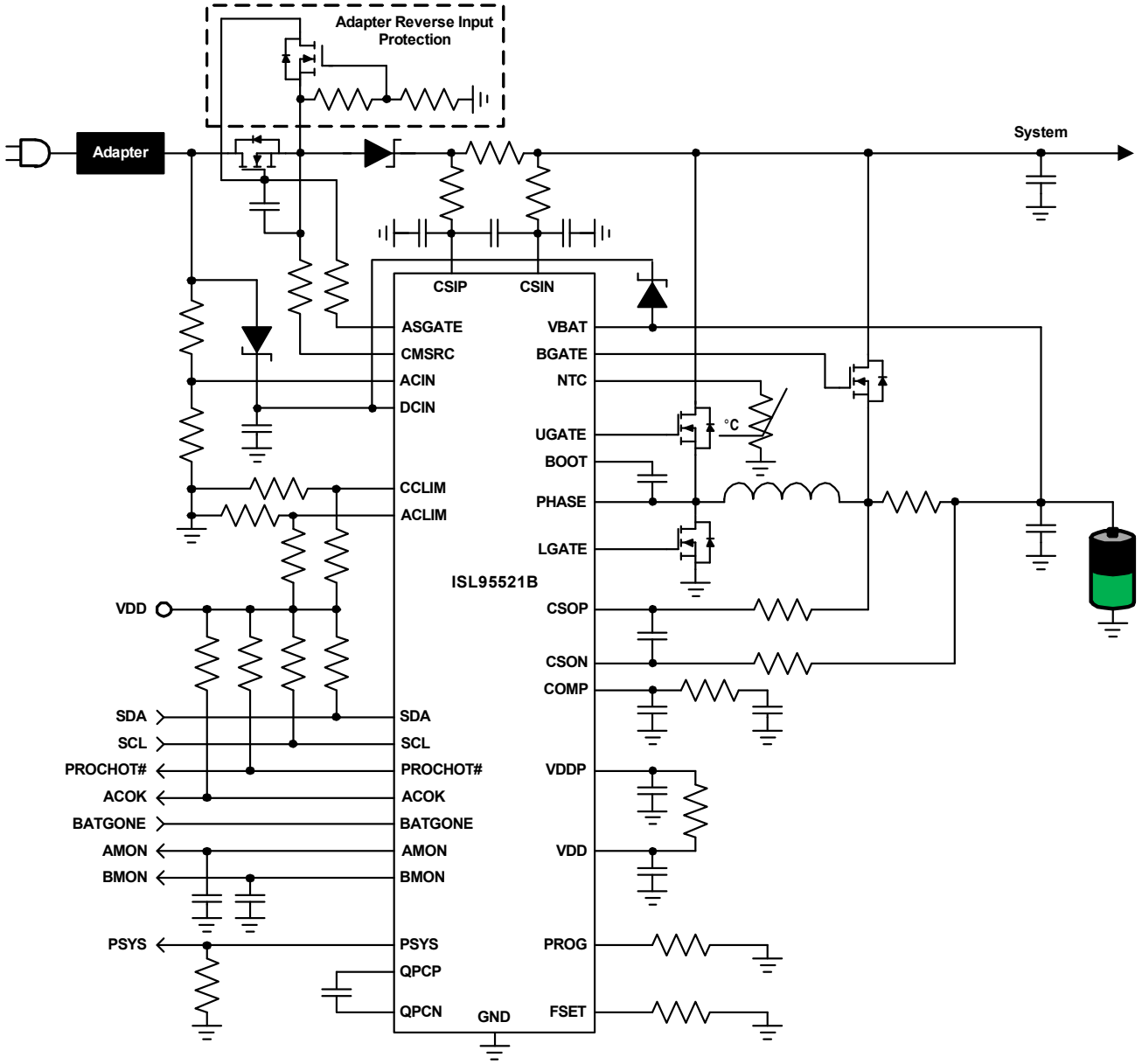

Figure 5. Typical Application Circuit: HPB Charger Configuration with One NMOS Selector and Schottky Diode

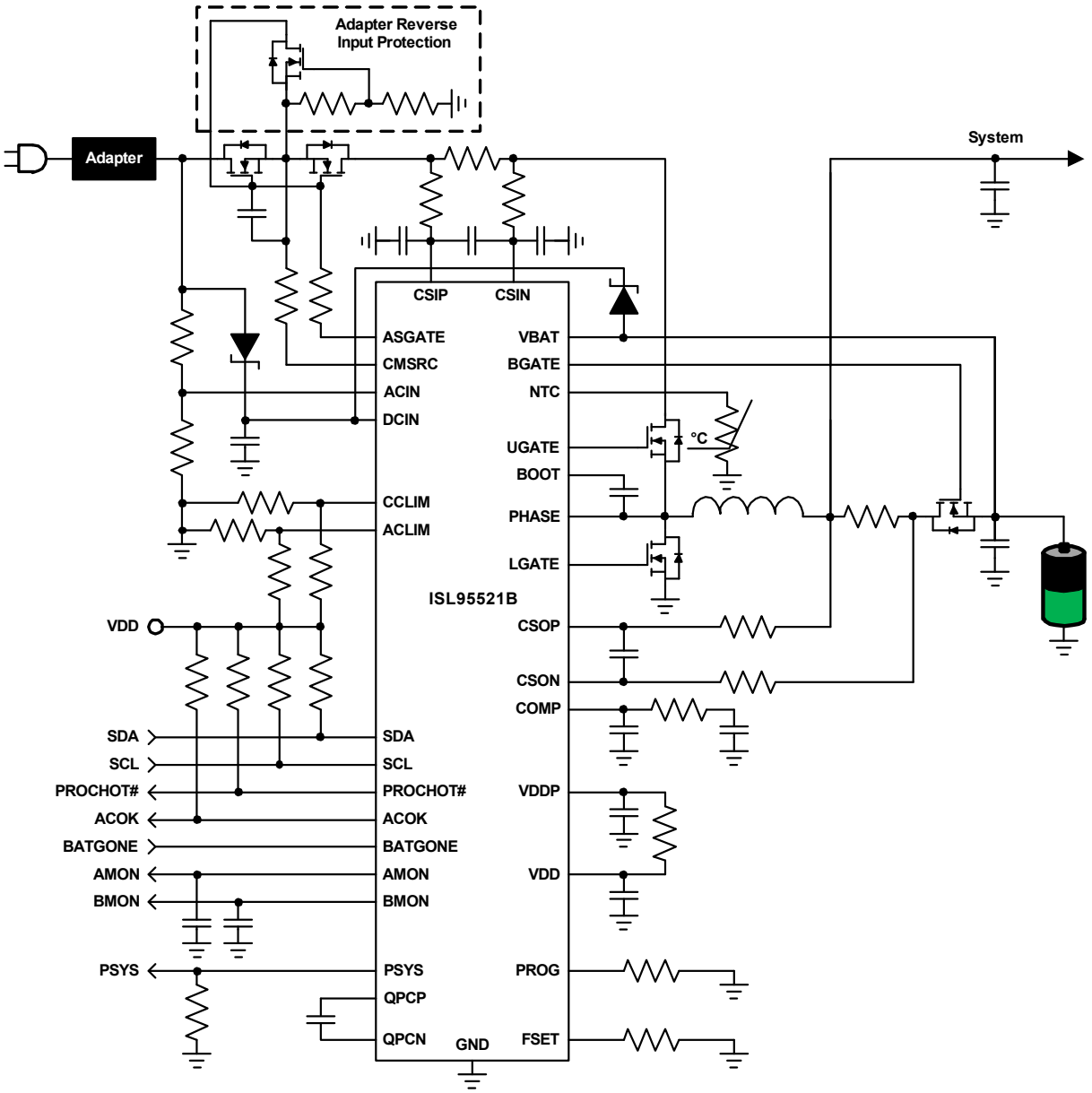

Figure 6. Typical Application Circuit: NVDC Charger Configuration with Two NMOS Selectors

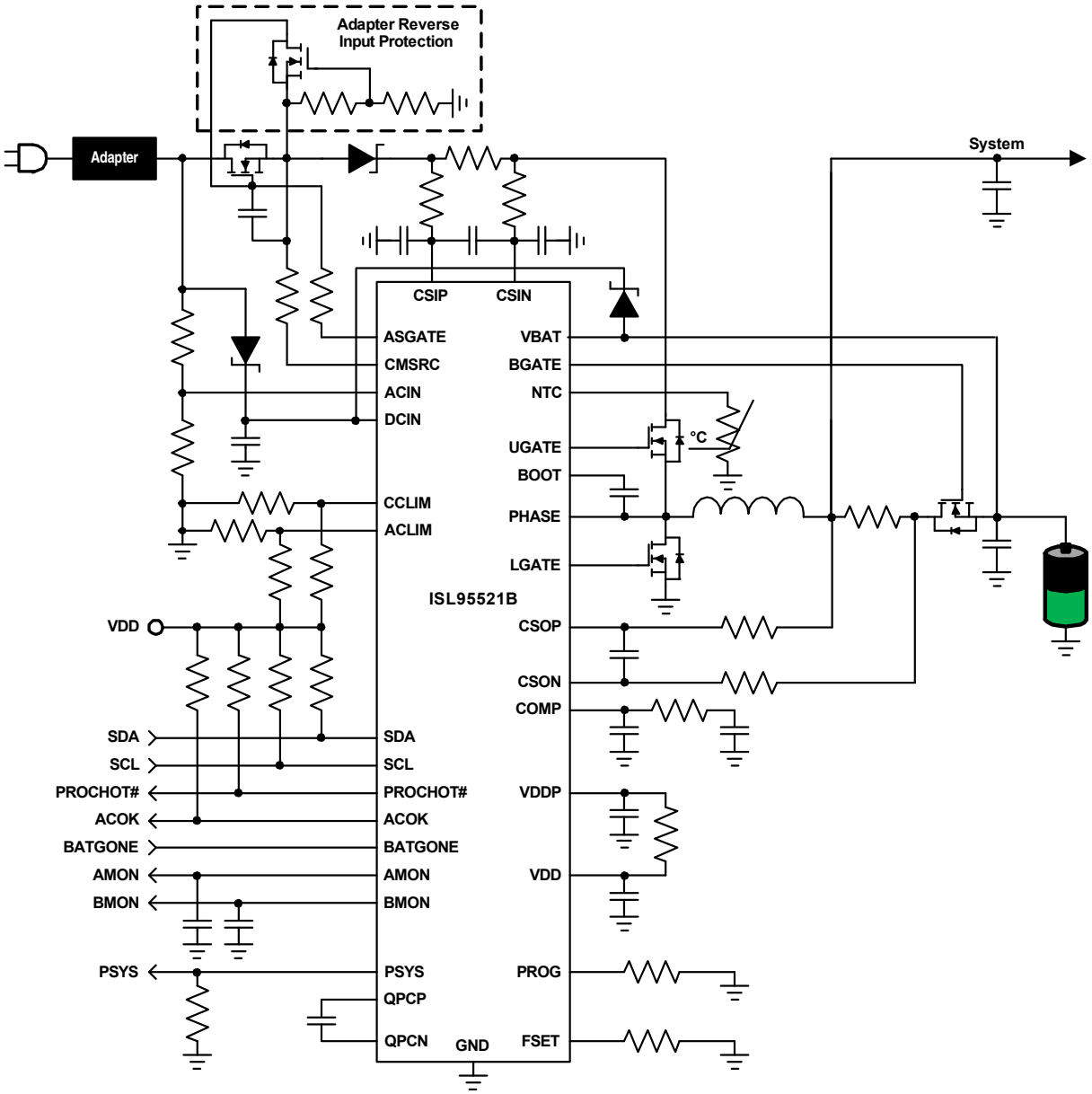

Figure 7. Typical Application Circuit: NVDC Charger Configuration with One NMOS Selector and Schottky Diode

1.3 Ordering Information

Part Number (Notes 2, 3)	Part Marking	Temp. Range (°C)	Tape and Reel (Units) (Note 1)	Package (RoHS Compliant)	Pkg. Dwg. #
ISL95521BHRZ	95521B	0 to +85	-	32 Ld 4x4 QFN	L32.4x4A
ISL95521BHRZ-T	95521B	0 to +85	6k	32 Ld 4x4 QFN	L32.4x4A
ISL95521BIRZ	21BIRZ	-40 to +100	-	32 Ld 4x4 QFN	L32.4x4A
ISL95521BIRZ-T	21BIRZ	-40 to +100	6k	32 Ld 4x4 QFN	L32.4x4A
ISL95521BCOMBO-HYBEVZ	HPB Configuration Evaluation Board				
ISL95521BCOMBONVDCEVZ	NVDC Configuration Evaluation Board				

Notes:

1. See TB347 for details about reel specifications.
2. These Pb-free plastic packaged products employ special Pb-free material sets, molding compounds/die attach materials and 100% matte tin plate plus anneal (e3 termination finish, which is RoHS compliant and compatible with both SnPb and Pb-free soldering operations). Pb-free products are MSL classified at Pb-free peak reflow temperatures that meet or exceed the Pb-free requirements of IPC/JEDEC J-STD-020.
3. For Moisture Sensitivity Level (MSL), see the ISL95521B page. For more information about MSL, see TB363.

Table 1. Key Differences Between Family of Parts

	ISL95521B	ISL88739	ISL88750
Charger Type	HPB and NVDC combo	HPB and NVDC combo	NVDC
PSYS	Yes	No	No
PROCHOT# and NTC	Yes	Yes	No

1.4 Pin Configuration

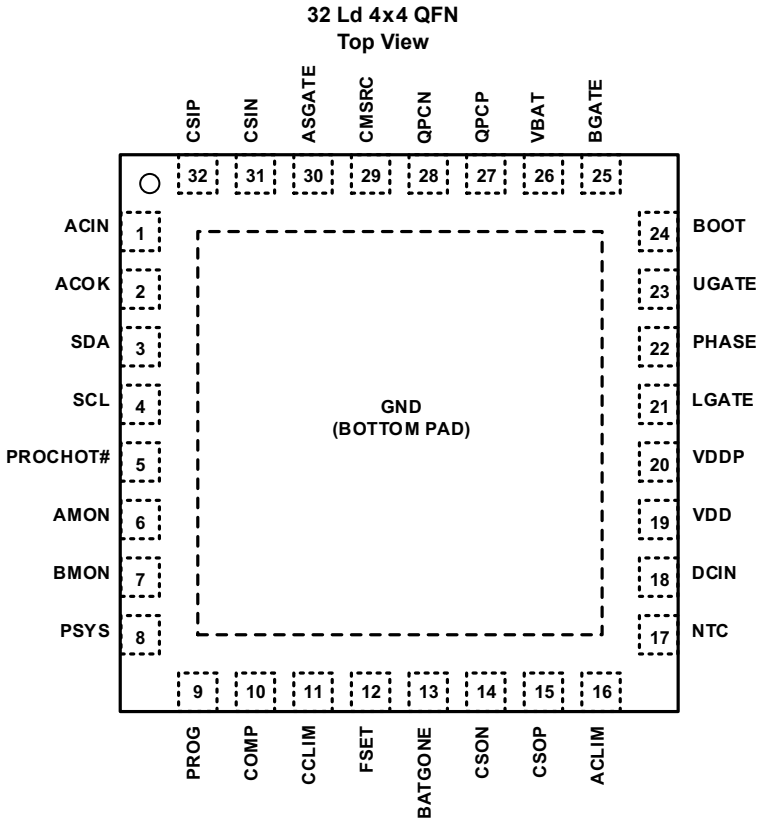

1.5 Pin Descriptions

Pin #	Pin Name	Description
Bottom PAD	GND	Signal common of the IC. Unless otherwise stated, signals are referenced to the GND pin. It should also be used as the thermal pad for heat removal.
1	ACIN	Adapter voltage sense. The adapter voltage is “valid” if the ACIN pin voltage is between 2V and 3.5V. If the ACIN pin voltage exceeds 3.5V, the adapter voltage is in the overvoltage condition and the ISL95521B turns off the ASGATE MOSFETs to isolate the adapter from the system.
2	ACOK	Open-drain output to indicate adapter voltage is ready. Pulled low if the adapter voltage is not ready.
3	SDA	SMBus data I/O. Connect to the data line from the host controller or smart battery. Connect a 10kΩ pull-up resistor according to the SMBus specification.
4	SCL	SMBus clock I/O. Connect to the clock line from the host controller or smart battery. Connect a 10kΩ pull-up resistor according to the SMBus specification.
5	PROCHOT#	Open-drain output. Pull low with SMBus programmable debounce time if any of the four conditions occur: 1. Adapter current reaches PROCHOT_IADP. 2. Battery discharging current reaches PROCHOT_IDIS. 3. System bus voltage is below the low system voltage detection threshold (programmable through SMBus). 4. NTC pin voltage is below 170mV. When asserted, it latches on for a minimum SMBus programmable time before it can be cleared.
6	AMON	Adapter current monitor output. $V_{AMON} = 32 \times (V_{CSIP} - V_{CSIN})$. Leave the AMON pin floating if not used.
7	BMON	Battery discharging current monitor. $V_{BMON} = 32 \times (V_{CSON} - V_{CSOP})$. Leave the BMON pin floating if not used.
8	PSYS	System power monitor output. Connect the PSYS pin to GND if not used.

Pin #	Pin Name	Description
9	PROG	A resistor to GND sets the following configurations: 1. HPB charger or NVDC charger. 2. Default number of the battery cells in series. 3. Adapter current sense resistor and battery current sense resistor values. See Table 17 on page 48 for programming options. After POR, pulling the PROG pin to 5V enables learn mode.
10	COMP	Error amplifier output. Connect compensation network externally from COMP to GND.
11	CCLIM	The voltage on this pin sets the WOCP threshold for the current flowing into the battery.
12	FSET	A resistor from this pin to GND programs the default switching frequency. See Table 19 on page 50 for programming options.
13	BATGONE	Battery presence indicator input pin to the ISL95521B. Logic high indicates the battery has been removed. Logic low indicates the battery is present.
14	CSON	Battery current sense “–” input. Also senses the NVDC charger system voltage.
15	CSOP	Battery current sense “+” input.
16	ACLIM	The voltage on this pin sets the hardware-based adapter current limit. The lower value of the hardware-set adapter current limit and the SMBus set adapter current limit is the actual limit of the adapter current. The hardware-based adapter current limit also sets the regulated inrush current level for ASGATE MOSFET protection.
17	NTC	10µA current source output. Connect an NTC thermistor network from this pin to GND. If the NTC pin voltage is below 170mV, the ISL95521B pulls PROCHOT# low. Other than connecting an NTC thermistor network, this NTC pin comparator can be used as a general purpose comparator for the platform to use.
18	DCIN	Input of an internal 5V output LDO. Renesas recommends connecting a diode-OR from adapter and battery. The DCIN pin voltage needs to be higher than the VBAT pin voltage for ASGATE to soft-start turning on. Connect a 10Ω DCIN resistor between the DCIN pin and the VADP/VSYS diodes, and connect a 4.7µF (50V) DCIN capacitor to GND. The capacitor must have an effective capacitance higher than 0.4µF at 20V.
19	VDD	5V power supply input for the ISL95521B control circuitry. Connect a 2.2µF (10V) MLCC capacitor to GND. The capacitor must have an effective capacitance higher than 0.4µF at 5V and x1.6 effective capacitance at the BOOT pin at 5V.
20	VDDP	Output of the internal 5V output LDO. The ISL95521B uses it as the FET driver power supply. Connect a 2.2µF (10V) MLCC capacitor to GND. The capacitor must have an effective capacitance higher than 0.4µF at 5V and x1.6 effective capacitance at the BOOT pin at 5V.
21	LGATE	Output of low-side switching FET gate drive. Connect this pin to the gate of the low-side switching FET.
22	PHASE	Current return path for the high-side switching FET gate drive. Connect this pin to the node consisting of the high-side switching FET source, the low-side switching FET drain, and the output inductor.
23	UGATE	Output of high-side switching FET gate drive. Connect this pin to the gate of the high-side switching FET.
24	BOOT	Connect an MLCC capacitor across the BOOT pin and the PHASE pin. The boot capacitor is charged through an internal bootstrap switch connected from the VDDP pin to the BOOT pin, when the PHASE pin drops below VDDP minus the voltage drop across the internal bootstrap switch. Connect a 0.47µF (25V) bootstrap capacitor, which must have an effective capacitance higher than 0.25µF at 5V and x50 effective high-side MOSFET gate capacitance.
25	BGATE	Output of the gate drive for the NFET connecting the system voltage and the battery. The behavior of the BGATE depends on whether the ISL95521B is in the HPB charger configuration or the NVDC charger configuration.
26	VBAT	Current return path for the BGATE gate drive. Also senses battery voltage. It is recommended to connect an RC filter at the VBAT pin.
27	QPCP	Internal charge pump “+” input. Connect an MLCC capacitor across the QPCP pin and the QPCN pin.
28	QPCN	Internal charge pump “-” input. Connect an MLCC capacitor across the QPCP pin and the QPCN pin.
29	CMSRC	Common source node of the two back-to-back ASGATE NFETs.
30	ASGATE	Output of the gate drive for the two back-to-back NFETs.
31	CSIN	Adapter current sense “-” input.
32	CSIP	Adapter current sense “+” input. Also senses input voltage.

2. Specifications

2.1 Absolute Maximum Ratings

Parameter	Minimum	Maximum	Unit
CSIP, CSIN, DCIN, CMSRC, QPCN	-0.3	+28	V
VBAT, CSOP, CSON	-0.3	+28	V
ASGATE, BGATE, QPCP	-0.3	+33	V
VDD, VDDP	-0.3	+7	V
CSIP-CSIN, CSOP-CSON	-0.3	+0.3	V
QPCP-QPCN	-0.3	+7	V
UGATE-PHASE	-0.3	+7	V
BOOT Voltage (BOOT)	-0.3	+33	V
BOOT to PHASE Voltage (BOOT-PHASE)	-0.3	+7 (DC)	V
	-0.3	+9 (<10ns)	V
PHASE Voltage (PHASE)	-0.3	28	V
	-7 (<20ns pulse width, 10µJ)		V
UGATE Voltage (UGATE)	(PHASE - 0.3) (DC)	BOOT	V
	(PHASE - 5) (<20ns pulse width, 10µJ)	BOOT	V
LGATE Voltage	-2.5 (<20ns pulse width, 5µJ)	VDDP + 0.3	V
Open-Drain Outputs, ACOK, PROCHOT#	-0.3	+7	V
All Other Pins	-0.3	(VDD +0.3)	V
ESD Rating	**Value**		**Unit**
Human Body Model (Tested per JESD22-A114E)	2.5		kV
Charged Device Model (Tested per JESD22-C101A)	750		V
Latch-Up (Tested per JESD-78B)	Class 2, Level A		

CAUTION: Do not operate at or near the maximum ratings listed for extended periods of time. Exposure to such conditions can adversely impact product reliability and result in failures not covered by warranty.

2.2 Thermal Information

Thermal Resistance (Typical)	θ_{JA} (°C/W)	θ_{JC} (°C/W)
32 Ld QFN Package (Notes 4, 5)	39	3

Notes:

4. θ_{JA} is measured in free air with the component mounted on a high-effective thermal conductivity test board with “direct attach” features. See TB379.
5. For θ_{JC}, the “case temp” location is the center of the exposed metal pad on the package underside.

Parameter	Minimum	Maximum	Unit
Maximum Junction Temperature		+150	°C
Maximum Storage Temperature Range	-65	+150	°C
Pb-Free Reflow Profile	see TB493		

2.3 Recommended Operating Conditions

Parameter	Minimum	Maximum	Unit
Ambient Temperature HRZ	0	+85	°C
Ambient Temperature IRZ	-40	+100	°C
Junction Temperature	0	125	°C

2.4 Electrical Specifications

Operating conditions: V_{DD} = 5V, T_A = 0°C to +85°C or -40°C to +100°C unless otherwise noted. **Boldface limits apply across the operating temperature range, 0°C to +85°C (HRZ) or -40°C to +100°C (IRZ).**

Parameter	Symbol	Test Conditions	Min (Note 6)	Typ	Max (Note 6)	Unit
Quiescent Current and POR						
Battery Current	$I_{BAT_BGATE_OFF}$ NVDC	Adapter present, BGATE off, V_{BAT} = 16.8V, DCIN current does not come from battery, I_BAT = I_VBAT		40	**75**	µA
	$I_{BAT_BGATE_ON}$ NVDC	Battery only, BGATE on, V_{BAT} = 16.8V, DCIN current comes from battery, I_BAT = I_PHASE + I_VBAT + I_CSOP + I_CSON + I_DCIN I+ I_CMSRC		130	**190**	µA
	$I_{BAT_BGATE_OFF}$ HPB	Adapter present, BGATE off, V_{BAT} = 16.8V, DCIN current does not come from battery, I_BAT = I_PHASE + I_VBAT + I_CSOP + I_CSON + I_CMSRC		43	**75**	µA
	$I_{BAT_BGATE_ON}$ HPB	Battery only, BGATE on, V_{BAT} = 16.8V, DCIN current comes from battery, I_BAT = I_PHASE + I_VBAT + I_CSOP + I_CSON + I_DCIN + I_CSIP + I_CSIN + I_CMSRC		130	**190**	µA
Quiescent Current	$I_{DCIN_STANDBY}$ HPB	VADP = 19.2V, AMON, BMON, PSYS all off		160	**220**	µA
	$I_{DCIN_NOSW_1}$ HPB	VADP = 19.2V, no switching, AMON, BMON, PSYS all off		785	**900**	µA
	$I_{DCIN_NOSW_2}$ HPB	VADP = 19.2V, no switching, AMON, BMON, PSYS all on		1070	**1250**	µA
	$I_{DCIN_SW_H}$ HPB	VADP = 19.2V, charge enabled, AMON, BMON, PSYS all off		1.52	**1.82**	mA
	$I_{DCIN_SW_N}$ NVDC	VADP = 19.2V, charge enabled, AMON, BMON, PSYS all off		1.45	**1.75**	mA
VDD Power-On Reset (POR)	POR_{VDD_R}	V_{DD} rising		4.66	**4.75**	V
	POR_{VDD_F}	V_{DD} falling	**4.35**	4.44		mV

Operating conditions: V_{DD} = 5V, T_A = 0°C to +85°C or -40°C to +100°C unless otherwise noted. **Boldface limits apply across the operating temperature range, 0°C to +85°C (HRZ) or -40°C to +100°C (IRZ). (Continued)**

Parameter	Symbol	Test Conditions	Min (Note 6)	Typ	Max (Note 6)	Unit
Charging Voltage Limit						
Maximum Charging Voltage Accuracy	V_{CHG_MAX}	MaxChargeVoltage = 0x41A0H (16.8V) T_A = 0°C to +85°C		16.79		V
			-0.75		**0.75**	%
		MaxChargeVoltage = 0x41A0H (16.8V) T_A = -40°C to +100°C	**-0.85**		**0.85**	%
		MaxChargeVoltage = 0x3140H (12.608V) T_A = 0°C to +85°C		12.6		V
			-0.75		**0.75**	%
		MaxChargeVoltage = 0x3140H (12.608V) T_A = -40°C to +100°C	**-0.85**		**0.85**	%
		MaxChargeVoltage = 0x20D0H (8.4V) T_A = 0°C to +85°C		8.4		V
			-0.75		**0.75**	%
		MaxChargeVoltage = 0x20D0H (8.4V) T_A = -40°C to +100°C	**-0.85**		**0.85**	%
Minimum Charging Voltage Accuracy (NVDC 450mV + MinChargeVoltage register setting)	V_{CHG_MIN}	MinChargeVoltage = 0x2A00H (10.752V) T_A = 0°C to +85°C	**11.02**	11.20	**11.40**	V
		MinChargeVoltage = 0x2A00H (10.752V) T_A = -40°C to +100°C	**11.02**		**11.43**	V
		MinChargeVoltage = 0x2000H (8.192V) T_A = 0°C to +85°C	**8.48**	8.64	**8.84**	V
		MinChargeVoltage = 0x2000H (8.192V) T_A = -40°C to +100°C	**8.48**		**8.86**	V
		MinChargeVoltage = 0x1500H (5.376V) T_A = 0°C to +85°C	**5.680**	5.825	**6**	V
		MinChargeVoltage = 0x1500H (5.376V) T_A = -40°C to +100°C	**5.680**		**6.010**	V
Battery Current Limit						
Battery Current Sense Amplifier Input Differential Voltage Range	V_{IBAT_RGE5}	R_{s2} = 5mΩ, charging current (V_{CSOP} - V_{CSON})	**0**		**40.5**	mV
	V_{IBAT_RGE10}	R_{s2} = 10mΩ or R_{s2} = 20mΩ, charging current (V_{CSOP} - V_{CSON})	**0**		**81**	mV
	V_{IBAT_RGED}	Discharging current (V_{CSOP} - V_{CSON})	**-81**		**0**	mV

Operating conditions: V_{DD} = 5V, T_A = 0°C to +85°C or -40°C to +100°C unless otherwise noted. **Boldface limits apply across the operating temperature range, 0°C to +85°C (HRZ) or -40°C to +100°C (IRZ). (Continued)**

Parameter	Symbol	Test Conditions	Min (Note 6)	Typ	Max (Note 6)	Unit
Charging Current Limit R_{s2} = 10mΩ V_{BAT} > 4.5V	I_{CHG_ACC10}	ChargeCurrentLimit = 0x1F20H (7968mA) T_A = 0°C to +85°C		8000		mA
			-2.1	0.4	**3.4**	%
		ChargeCurrentLimit = 0x1F20H (7968mA) T_A = -40°C to +100°C	**-2.2**		**3.5**	%
		ChargeCurrentLimit = 0x0FA0H (4000mA) T_A = 0°C to +85°C		4025		mA
			-2.4	0.6	**3.8**	%
		ChargeCurrentLimit = 0x0FA0H (4000mA) T_A = -40°C to +100°C	**-2.6**		**4**	%
		ChargeCurrentLimit = 0x07E0H (2016mA) T_A = 0°C to +85°C		2030		mA
			-3.6	0.7	**5.4**	%
		ChargeCurrentLimit = 0x07E0H (2016mA) T_A = -40°C to +100°C	**-4.1**		**5.9**	%
		ChargeCurrentLimit = 0x03E0H (992mA) T_A = 0°C to +85°C		1006		mA
			-5	1.4	**7.9**	%
		ChargeCurrentLimit = 0x03E0H (992mA) T_A = -40°C to +100°C	**-6**		**8.9**	%
		ChargeCurrentLimit = 0x0200H (512mA) T_A = 0°C to +85°C		525		mA
			-8.4	2.5	**12.3**	%
		ChargeCurrentLimit = 0x0200H (512mA) T_A = -40°C to +100°C	**-10**		**14.3**	%
		ChargeCurrentLimit = 0x0100H (256mA) (not Trickle Charging mode current) T_A = 0°C to +85°C		256		mA
			-22.7	0	**21.1**	%
		ChargeCurrentLimit = 0x0100H (256mA) (not Trickle Charging mode current) T_A = -40°C to +100°C	**-27**		**25.1**	%

Operating conditions: V_{DD} = 5V, T_A = 0°C to +85°C or -40°C to +100°C unless otherwise noted. **Boldface limits apply across the operating temperature range, 0°C to +85°C (HRZ) or -40°C to +100°C (IRZ). (Continued)**

Parameter	Symbol	Test Conditions	Min (Note 6)	Typ	Max (Note 6)	Unit
Charging Current Limit R_{s2} = 5mΩ V_{BAT} > 4.5V	I_{CHG_ACC5}	ChargeCurrentLimit = 0x1F20H (7968mA) T_A = 0°C to +85°C		8015		mA
			-2.4	0.6	**3.8**	%
		ChargeCurrentLimit = 0x1F20H (7968mA) T_A = -40°C to +100°C	**-2.6**		**4**	%
		ChargeCurrentLimit = 0x0FA0H (4000mA) T_A = 0°C to +85°C		4030		mA
			-3.2	0.8	**4.3**	%
		ChargeCurrentLimit = 0x0FA0H (4000mA) T_A = -40°C to +100°C	**-3.7**		**4.8**	%
		ChargeCurrentLimit = 0x07E0H (2016mA) T_A = 0°C to +85°C		2035		mA
			-5	0.9	**6.3**	%
		ChargeCurrentLimit = 0x07E0H (2016mA) T_A = -40°C to +100°C	**-6**		**7.3**	%
		ChargeCurrentLimit = 0x03E0H (992mA) T_A = 0°C to +85°C		1008		mA
			-9.1	1.6	**10.3**	%
		ChargeCurrentLimit = 0x03E0H (992mA) T_A = -40°C to +100°C	**-11**		**12.3**	%
		ChargeCurrentLimit = 0x0200H (512mA) T_A = 0°C to +85°C		523		mA
			-17.4	2.1	**16.8**	%
		ChargeCurrentLimit = 0x0200H (512mA) T_A = -40°C to +100°C	**-21**		**20.8**	%
		ChargeCurrentLimit = 0x0100H (256mA) (Not Trickle Charging mode current) T_A = 0°C to +85°C		248		mA
			-42	-3	**27**	%
		ChargeCurrentLimit = 0x0100H (256mA) (Not Trickle Charging mode current) T_A = -40°C to +100°C	**-50**		**35**	%
Trickle Charging Current Limit	$I_{TRKL_ACC10_256}$	R_{s2} = 10mΩ, V_{BAT} < MinChargeVoltage T_A = 0°C to +85°C	**210**	265	**310**	mA
		R_{s2} = 10mΩ, V_{BAT} < MinChargeVoltage T_A = -40°C to +100°C	**200**		**315**	mA
	$I_{TRKL_ACC10_128}$	R_{s2} = 10mΩ, V_{BAT} < MinChargeVoltage T_A = 0°C to +85°C	**85**	135	**180**	mA
		R_{s2} = 10mΩ, V_{BAT} < MinChargeVoltage T_A = -40°C to +100°C	**75**		**185**	mA
	$I_{TRKL_ACC5_256}$	R_{s2} = 5mΩ, V_{BAT} < MinChargeVoltage T_A = 0°C to +85°C	**165**	255	**330**	mA
		R_{s2} = 5mΩ, V_{BAT} < MinChargeVoltage T_A = -40°C to +100°C	**145**		**340**	mA
	$I_{TRKL_ACC5_128}$	R_{s2} = 5mΩ, V_{BAT} < MinChargeVoltage T_A = 0°C to +85°C	**32**	120	**208**	mA
		R_{s2} = 5mΩ, V_{BAT} < MinChargeVoltage T_A = -40°C to +100°C	**12**		**215**	mA
V_{BAT} Trickle Charging Threshold	$V_{TRKL_TH_R}$	MinChargeVoltage = 4.096V, exit Trickle Charging mode		4.39	**4.57**	V
	$V_{TRKL_TH_F}$	MinChargeVoltage = 4.096V, enter Trickle Charging mode	**3.85**	4.03		V

Operating conditions: V_{DD} = 5V, T_A = 0°C to +85°C or -40°C to +100°C unless otherwise noted. **Boldface limits apply across the operating temperature range, 0°C to +85°C (HRZ) or -40°C to +100°C (IRZ). (Continued)**

Parameter	Symbol	Test Conditions	Min (Note 6)	Typ	Max (Note 6)	Unit
Discharging Current PROCHOT# Threshold R_{s2} = 5mΩ	$I_{DIS_HOT_TH5}$	DCPROCHOT = 0x2A00H (10752mA) T_A = 0°C to +85°C		10848		mA
			-3.5	0.9	**5.3**	%
		DCPROCHOT = 0x2A00H (10752mA) T_A = -40°C to +100°C	**-3.6**		**5.3**	%
		DCPROCHOT = 0x1500H (5376mA) T_A = 0°C to +85°C		5450		mA
			-6.4	1.4	**9.2**	%
		DCPROCHOT = 0x1500H (5376mA) T_A = -40°C to +100°C	**-6.5**		**9.2**	%
Adapter Current Limit						
Adapter Current Sense Amplifier Input Differential Voltage Range	V_{IADP_RGE}	R_{s1} = 10mΩ or R_{s1} = 20mΩ, adapter current (V_{CSIP} - V_{CSIN})	**0**		**81**	mV
Adapter Current Limit R_{s1} = 10mΩ	I_{ADP_10}	AdapterCurrentLimit = 0x1F20H (8064mA) T_A = 0°C to +85°C		8115		mA
			-1.2	0.6	**2.5**	%
		AdapterCurrentLimit = 0x1F20H (8064mA) T_A = -40°C to +100°C	**-1.2**		**2.6**	%
		AdapterCurrentLimit = 0x1000H (4096mA) T_A = 0°C to +85°C		4140		mA
			-1.3	1.1	**3.5**	%
		AdapterCurrentLimit = 0x1000H (4096mA) T_A = -40°C to +100°C	**-1.3**		**3.7**	%
		AdapterCurrentLimit = 0x0800H (2048mA) T_A = 0°C to +85°C		2075		mA
			-2.5	1.3	**5.2**	%
		AdapterCurrentLimit = 0x0800H (2048mA) T_A = -40°C to +100°C	**-2.5**		**5.7**	%
		AdapterCurrentLimit = 0x0400H (1024mA) T_A = 0°C to +85°C		1055		mA
			-4	3	**10**	%
		AdapterCurrentLimit = 0x0400H (1024mA) T_A = -40°C to +100°C	**-4**		**11**	%
		AdapterCurrentLimit = 0x0200H (512mA) T_A = 0°C to +85°C		545		mA
			-6	6.5	**19**	%
		AdapterCurrentLimit = 0x0200H (512mA) T_A = -40°C to +100°C	**-6**		**21**	%
		AdapterCurrentLimit = 0x0100H (256mA) T_A = 0°C to +85°C		290		mA
			-12.0	13.3	**40.0**	%
		AdapterCurrentLimit = 0x0100H (256mA) T_A = -40°C to +100°C	**-12.0**		**44**	%
Adapter Current PROCHOT# Threshold R_{s1} = 10mΩ	$I_{ADP_HOT_TH10}$	ACPROCHOT = 0x1500H (5376mA)		5389		mA
			-3.50	0.25	**4**	%
		ACPROCHOT = 0x0A80H (2688mA)		2728		mA
			-7.0	1.5	**10.0**	%

Operating conditions: V_{DD} = 5V, T_A = 0°C to +85°C or -40°C to +100°C unless otherwise noted. **Boldface limits apply across the operating temperature range, 0°C to +85°C (HRZ) or -40°C to +100°C (IRZ). (Continued)**

Parameter	Symbol	Test Conditions	Min (Note 6)	Typ	Max (Note 6)	Unit
Monitor						
AMON Accuracy V_{AMON} = 32x (V_{CSIP} - V_{CSIN}) R_{s1} = 10mΩ	V_{AMON}	V_{CSIP} - V_{CSIN} = 80mV T_A = 0°C to +85°C		2544		mV
			-2.5	-0.6	**1.3**	%
		V_{CSIP} - V_{CSIN} = 80mV T_A = -40°C to +100°C	**-2.7**		**1.5**	%
		V_{CSIP} - V_{CSIN} = 40mV T_A = 0°C to +85°C		1269		mV
			-3.50	-0.85	**1.80**	%
		V_{CSIP} - V_{CSIN} = 40mV T_A = -40°C to +100°C	**-3.9**		**2.2**	%
		V_{CSIP} - V_{CSIN} = 20mV T_A = 0°C to +85°C		632		mV
			-6.00	-1.25	**3.50**	%
		V_{CSIP} - V_{CSIN} = 20mV T_A = -40°C to +100°C	**-6.8**		**4.3**	%
		V_{CSIP} - V_{CSIN} = 10mV T_A = 0°C to +85°C		313		mV
			-10.0	-2.2	**6.6**	%
		V_{CSIP} - V_{CSIN} = 10mV T_A = -40°C to +100°C	**-11.6**		**8.2**	%
		V_{CSIP} - V_{CSIN} = 5mV T_A = 0°C to +85°C		154		mV
			-19.50	-3.75	**12.50**	%
		V_{CSIP} - V_{CSIN} = 5mV T_A = -40°C to +100°C	**-22.5**		**15.5**	%
AMON Current Sourcing Capability	$I_{AMON_MAX_SR}$	T_A = 0°C to +85°C	**255**	515	**800**	µA
		T_A = -40°C to +100°C	**205**		**850**	µA
AMON Current Sinking Capability	$I_{AMON_MAX_SK}$		**12**	22	**32**	µA
BMON Accuracy V_{BMON} = 32 x (V_{CSON} - V_{CSOP}) R_{s2} = 10mΩ	V_{BMON}	V_{CSON} - V_{CSOP} = 80mV T_A = 0°C to +85°C		2562		mV
			-3.70	0.08	**3.70**	%
		V_{CSON} - V_{CSOP} = 80mV T_A = -40°C to +100°C	**-3.70**		**4.10**	%
		V_{CSON} - V_{CSOP} = 40mV T_A = 0°C to +85°C		1284		mV
			-4.2	0.3	**4.7**	%
		V_{CSON} - V_{CSOP} = 40mV T_A = -40°C to +100°C	**-4.2**		**5.1**	%
		V_{CSON} - V_{CSOP} = 20mV T_A = 0°C to +85°C		645		mV
			-5.70	0.75	**7.40**	%
		V_{CSON} - V_{CSOP} = 20mV T_A = -40°C to +100°C	**-5.70**		**7.9**	%
		V_{CSON} - V_{CSOP} = 10mV T_A = 0°C to +85°C		325		mV
			-7.5	1.7	**11.5**	%
		V_{CSON} - V_{CSOP} = 10mV T_A = -40°C to +100°C	**-7.5**		**12.5**	%
BMON Current Sourcing Capability	$I_{BMON_MAX_SR}$	T_A = 0°C to +85°C	**120**	285	**460**	µA
		T_A = -40°C to +100°C	**90**		**490**	µA
BMON Current Sinking Capability	$I_{BMON_MAX_SK}$		**5.5**	11.4	**17.5**	µA

Operating conditions: V_{DD} = 5V, T_A = 0°C to +85°C or -40°C to +100°C unless otherwise noted. **Boldface limits apply across the operating temperature range, 0°C to +85°C (HRZ) or -40°C to +100°C (IRZ). (Continued)**

Parameter	Symbol	Test Conditions	Min (Note 6)	Typ	Max (Note 6)	Unit
PSYS Output Current R_{s1} = 10mΩ R_{s2} = 10mΩ PSYS Current Gain = 1.14µA/W	I_{PSYS}	V_{CSIP} = 19V, V_{CSIP} - V_{CSIN} = 80mV, V_{BAT} = 12V, V_{CSOP} - V_{CSON} = 0mV T_A = 0°C to +85°C		174		µA
			-8.3	0.4	**9.1**	%
		V_{CSIP} = 19V, V_{CSIP} - V_{CSIN} = 80mV, V_{BAT} = 12V, V_{CSOP} - V_{CSON} = 0mV T_A = -40°C to +100°C	**-10.6**		**9.1**	%
		V_{CSIP} = 19V, V_{CSIP} - V_{CSIN} = 80mV, V_{BAT} = 12V, V_{CSOP} - V_{CSON} = 20mV T_A = 0°C to +85°C		146.5		µA
			-8.2	0.4	**9**	%
		V_{CSIP} = 19V, V_{CSIP} - V_{CSIN} = 80mV, V_{BAT} = 12V, V_{CSOP} - V_{CSON} = 20mV T_A = -40°C to +100°C	**-9.6**		**9**	%
		V_{CSIP} = 19V, V_{CSIP} - V_{CSIN} = 80mV, V_{BAT} = 12V, V_{CSOP} - V_{CSON} = -20mV T_A = 0°C to +85°C		199.5		µA
			-8.4	-0.6	**7.2**	%
		V_{CSIP} = 19V, V_{CSIP} - V_{CSIN} = 80mV, V_{BAT} = 12V, V_{CSOP} - V_{CSON} = -20mV T_A = -40°C to +100°C	**-13.2**		**7.2**	%
		V_{CSIP} = 0V, V_{CSIP} - V_{CSIN} = 0mV, V_{BAT} = 12V, V_{CSOP} - V_{CSON} = -20mV T_A = 0°C to +85°C		26.2		µA
			-15.2	-4.2	**6.8**	%
		V_{CSIP} = 0V, V_{CSIP} - V_{CSIN} = 0mV, V_{BAT} = 12V, V_{CSOP} - V_{CSON} = -20mV T_A = -40°C to +100°C	**−15.6**		**6.8**	%
Maximum PSYS Output Voltage	V_{PSYS_MAX}	I_{PSYS} = 200µA		2.25		V
NTC Source Current	I_{NTC}	NTC = 1V	**9.71**	10.08	**10.44**	µA
NTC_PROCHOT# Trip Threshold	V_{NTC_TH}	V_{NTC} falling T_A = 0°C to +85°C	**161**	171	**182**	mV
		V_{NTC} falling T_A = -40°C to +100°C	**161**		**183**	mV
NTC_PROCHOT# Hysteresis	V_{NTC_HYS}	T_A = 0°C to +85°C	**18**	27	**36**	mV
		T_A = -40°C to +100°C	**18**		**37**	mV
ACIN/ACOK Comparator						
ACIN Threshold Rising	$V_{ACIN_TH_R}$	V_{ACIN} rising T_A = 0°C to +85°C		2.041	**2.070**	V
		V_{ACIN} rising T_A = -40°C to +100°C			**2.075**	V
ACIN Threshold Falling	$V_{ACIN_TH_F}$	V_{ACIN} falling T_A = 0°C to +85°C	**1.995**	2.024		V
		V_{ACIN} falling T_A = -40°C to +100°C	**1.990**			V
ACIN OVP Rising	$V_{ACIN_OVP_TH_R}$	V_{ACIN} rising T_A = 0°C to +85°C		3.5	**3.7**	V
		V_{ACIN} rising T_A = -40°C to +100°C			**3.705**	V

Operating conditions: V_{DD} = 5V, T_A = 0°C to +85°C or -40°C to +100°C unless otherwise noted. **Boldface limits apply across the operating temperature range, 0°C to +85°C (HRZ) or -40°C to +100°C (IRZ). (Continued)**

Parameter	Symbol	Test Conditions	Min (Note 6)	Typ	Max (Note 6)	Unit
ACIN OVP Falling	$V_{ACIN_OVP_TH_F}$	V_{ACIN} falling T_A = 0°C to +85°C	**3.30**	3.45		V
		V_{ACIN} falling T_A = -40°C to +100°C	**3.295**			V
ACIN Input Leakage Current	I_{ACIN_LEAK}		**-1**		**1**	µA
ACOK Input Leakage Current	I_{ACOK_LEAK}		**-1**		**1**	µA
ACOK Output Low Current	I_{ACOK}	V_{ACOK} = 0.3V		240		µA
ACLIM, CCLIM						
ACLIM Current Limit		V_{ACLIM} = 2.56V, R_{s1} = 10mΩ T_A = 0°C to +85°C	**7970**	8075	**8175**	mA
		V_{ACLIM} = 2.56V, R_{s1} = 10mΩ T_A = -40°C to +100°C	**7970**		**8185**	mA
		V_{ACLIM} = 1.92V, R_{s1} = 10mΩ T_A = 0°C to +85°C	**5970**	6060	**6150**	mA
		V_{ACLIM} = 1.92V, R_{s1} = 10mΩ T_A = -40°C to +100°C	**5970**		**6160**	mA
		V_{ACLIM} = 1.28V, R_{s1} = 10mΩ T_A = 0°C to +85°C	**3975**	4050	**4125**	mA
		V_{ACLIM} = 1.28V, R_{s1} = 10mΩ T_A = -40°C to +100°C	**3975**		**4135**	mA

Operating conditions: V_{DD} = 5V, T_A = 0°C to +85°C or -40°C to +100°C unless otherwise noted. **Boldface limits apply across the operating temperature range, 0°C to +85°C (HRZ) or -40°C to +100°C (IRZ). (Continued)**

Parameter	Symbol	Test Conditions	Min (Note 6)	Typ	Max (Note 6)	Unit
CCLIM Current Limit		V_{CCLIM} = 2.56V, R_{s1} = 10mΩ, R_{s2} = 5mΩ T_A = 0°C to +85°C	**7855**	8070	**8265**	mA
		V_{CCLIM} = 2.56V, R_{s1} = 10mΩ, R_{s2} = 5mΩ T_A = -40°C to +100°C	**7835**		**8285**	mA
		V_{CCLIM} = 1.92V, R_{s1} = 10mΩ, R_{s2} = 5mΩ T_A = 0°C to +85°C	**5875**	6050	**6205**	mA
		V_{CCLIM} = 1.92V, R_{s1} = 10mΩ, R_{s2} = 5mΩ T_A = -40°C to +100°C	**5865**		**6215**	mA
		V_{CCLIM} = 1.28V, R_{s1} = 10mΩ, R_{s2} = 5mΩ T_A = 0°C to +85°C	**3900**	4035	**4155**	mA
		V_{CCLIM} = 1.28V, R_{s1} = 10mΩ, R_{s2} = 5mΩ T_A = -40°C to +100°C	**3890**		**4165**	mA
		V_{CCLIM} = 2.56V, R_{s1} = 10mΩ, R_{s2} = 10mΩ T_A = 0°C to +85°C	**7860**	8065	**8250**	mA
		V_{CCLIM} = 2.56V, R_{s1} = 10mΩ, R_{s2} = 10mΩ T_A = -40°C to +100°C	**7850**		**8270**	mA
		V_{CCLIM} = 1.92V, R_{s1} = 10mΩ, R_{s2} = 10mΩ T_A = 0°C to +85°C	**5895**	6045	**6185**	mA
		V_{CCLIM} = 1.92V, R_{s1} = 10mΩ, R_{s2} = 10mΩ T_A = -40°C to +100°C	**5890**		**6195**	mA
		V_{CCLIM} = 1.28V, R_{s1} = 10mΩ, R_{s2} = 10mΩ T_A = 0°C to +85°C	**3930**	4035	**4135**	mA
		V_{CCLIM} = 1.28V, R_{s1} = 10mΩ, R_{s2} = 10mΩ T_A = -40°C to +100°C	**3925**		**4145**	mA
		V_{CCLIM} = 2.56V, R_{s1} = 20mΩ, R_{s2} = 20mΩ T_A = 0°C to +85°C	**3930**	4030	**4130**	mA
		V_{CCLIM} = 2.56V, R_{s1} = 20mΩ, R_{s2} = 20mΩ T_A = -40°C to +100°C	**3925**		**4135**	mA
		V_{CCLIM} = 1.92V, R_{s1} = 20mΩ, R_{s2} = 20mΩ T_A = 0°C to +85°C	**2945**	3025	**3100**	mA
		V_{CCLIM} = 1.92V, R_{s1} = 20mΩ, R_{s2} = 20mΩ T_A = -40°C to +100°C	**2940**		**3105**	mA
		V_{CCLIM} = 1.28V, R_{s1} = 20mΩ, R_{s2} = 20mΩ T_A = 0°C to +85°C	**1960**	2015	**2075**	mA
		V_{CCLIM} = 1.28V, R_{s1} = 20mΩ, R_{s2} = 20mΩ T_A = -40°C to +100°C	**1955**		**2080**	mA
PROCHOT#						
PROCHOT# Leakage Current	$I_{PROCHOT\#_LEAK}$		**-1**		**1**	µA
PROCHOT# Output Low Current	$I_{PROCHOT\#}$	$V_{PROCHOT\#}$ = 0.3V		42		mA

Operating conditions: V_{DD} = 5V, T_A = 0°C to +85°C or -40°C to +100°C unless otherwise noted. **Boldface limits apply across the operating temperature range, 0°C to +85°C (HRZ) or -40°C to +100°C (IRZ). (Continued)**

Parameter	Symbol	Test Conditions	Min (Note 6)	Typ	Max (Note 6)	Unit
Low VSYS PROCHOT# Trip Threshold	$V_{LOW_VSYS_HOT}$	Control1 register Bit<9:8> = 00 T_A = 0°C to +85°C	**5.48**	5.62	**5.76**	V
		Control1 register Bit<9:8> = 00 T_A = -40°C to +100°C	**5.470**		**5.765**	V
		Control1 register Bit<9:8> = 01 T_A = 0°C to +85°C	**5.97**	6.11	**6.25**	V
		Control1 register Bit<9:8> = 01 T_A = -40°C to +100°C	**5.960**		**6.255**	V
		Control1 register Bit<9:8> = 10 T_A = 0°C to +85°C	**6.44**	6.59	**6.73**	V
		Control1 register Bit<9:8> = 10 T_A = -40°C to +100°C	**6.430**		**6.735**	V
		Control1 register Bit<9:8> = 11 T_A = 0°C to +85°C	**6.90**	7.05	**7.20**	V
		Control1 register Bit<9:8> = 11 T_A = -40°C to +100°C	**6.890**		**7.205**	V
PROCHOT# Debounce Time		PROCHOT# debounce register Bit<1:0> = 01		102		µs
		PROCHOT# debounce register Bit<1:0> = 10		510		µs
PROCHOT# Duration Time		PROCHOT# duration register Bit<2:0> = 010		15.3		ms
		PROCHOT# duration register Bit<2:0> = 101		1.02		ms
BATGONE Threshold						
BATGONE Threshold Rising	$V_{BATGONE_TH_R}$	$V_{BATGONE}$ rising (battery removal)		2.58	**2.75**	V
BATGONE Threshold Falling	$V_{BATGONE_TH_F}$	$V_{BATGONE}$ falling (battery insertion)	**1.80**	2.12		V
LDO						
Output Voltage		V_{DCIN} = 6V to 25V, I_VDDP = 1mA T_A = 0°C to +85°C	**4.80**	5.24	**5.75**	V
		V_{DCIN} = 6V to 25V, I_VDDP = 1mA T_A = -40°C to +100°C	**4.75**		**5.80**	V
		V_{DCIN} = 6V, I_VDDP = 30mA T_A = 0°C to +85°C	**4.65**	5.12	**5.65**	V
		V_{DCIN} = 6V, I_VDDP = 30mA T_A = -40°C to +100°C	**4.55**		**5.65**	V
		V_{DCIN} = 25V, I_VDDP = 30mA T_A = 0°C to +85°C	**4.75**	5.22	**5.70**	V
		V_{DCIN} = 25V, I_VDDP = 30mA T_A = -40°C to +100°C	**4.70**		**5.75**	V
Gate Driver						
UGATE Pull-up Resistance (Note 7)	R_{UGPU}	200mA source current		1.0	**1.5**	Ω
UGATE Source Current	I_{UGSRC}	UGATE - PHASE = 2.5V		2.0		A
UGATE Sink Resistance (Note 7)	R_{UGPD}	250mA sink current		1.0	**1.5**	Ω
UGATE Sink Current	I_{UGSNK}	UGATE - PHASE = 2.5V		2.0		A
LGATE Pull-up Resistance (Note 7)	R_{LGPU}	250mA source current		1.0	**1.5**	Ω

Operating conditions: V_{DD} = 5V, T_A = 0°C to +85°C or -40°C to +100°C unless otherwise noted. **Boldface limits apply across the operating temperature range, 0°C to +85°C (HRZ) or -40°C to +100°C (IRZ). (Continued)**

Parameter	Symbol	Test Conditions	Min (Note 6)	Typ	Max (Note 6)	Unit
LGATE Source Current	I_{LGSRC}	LGATE - GND = 2.5V		2.0		A
LGATE Sink Resistance (Note 7)	R_{LGPD}	250mA sink current		0.5	**0.9**	Ω
LGATE Sink Current	I_{LGSNK}	LGATE - GND = 2.5V		4.0		A
UGATE to LGATE Dead Time	t_{UGFLGR}	UGATE falling to LGATE rising, no load		17		ns
LGATE to UGATE Dead Time	t_{LGFUGR}	LGATE falling to UGATE rising, no load		29		ns
ASGATE Pull-Up Resistance	R_{ASGPU}	1mA source current		500		Ω
ASGATE Sink Resistance	R_{ASGPD}	1mA sink current		1300		Ω
BGATE Pull-Up Resistance	R_{BGPU}	1mA source current		500		Ω
BGATE Sink Resistance	R_{BGPD}	1mA sink current		1300		Ω
BOOTSTRAP SWITCH						
ON-Resistance	R_F			20		Ω
Reverse Leakage	I_R	V_R = 25V		0.2		µA
Amplifiers						
Adapter Current Sense Amplifier Input Offset	V_{ACSNS_OFFSET}			0.4		mV
Battery Charging Current Sense Amplifier Input Offset	$V_{ICHGSNS_OFFSET}$			0.4		mV
Battery Discharging Current Sense Amplifier Input Offset	$V_{IDISSNS_OFFSET}$			0.4		mV
Error Amplifier DC Gain	A_{V0_EA}			80		dB
Error Amp Gain-bandwidth Product	GBW_EA	C_L = 20pF		5		MHz
COMP Lower Clamp	$V_{COMP_L_CLP}$			1.24	**1.40**	V
COMP Upper Clamp	$V_{COMP_U_CLP}$		**4.90**	4.99		V
Over-Temperature Protection						
Over-Temperature Threshold	T_{OTP_R}	Temperature rising		155		°C
	T_{OTP_F}	Temperature falling		128		°C
SMBus						
SDA/SCL Input Low Voltage					**0.8**	V
SDA/SCL Input High Voltage			**2**			V
SDA/SCL Input Bias Current		SDA, SCL = 0V, 5V	**-1**		**1**	µA
SDA, Output Sink Current (Note 8)		SDA = 0.4V		19		mA
SMBus Frequency	f_{SMB}	(Note 8)	**10**		**400**	kHz
Bus Free Time	t_{BUF}	100kHz, (Note 8)	**4.7**			µs
		400kHz, (Note 8)	**1.3**			µs
Start Condition Hold Time from SCL	t_{HD_STA}	100kHz, (Note 8)	**4**			µs
		400kHz, (Note 8)	**0.6**			µs
Start Condition Set-Up Time from SCL	t_{SU_STA}	100kHz, (Note 8)	**4.7**			µs
		400kHz, (Note 8)	**0.6**			µs
Stop Condition Set-Up Time from SCL	t_{HD_STO}	100kHz, (Note 8)	**4**			µs
		400kHz, (Note 8)	**0.6**			µs

Operating conditions: V_{DD} = 5V, T_A = 0°C to +85°C or -40°C to +100°C unless otherwise noted. **Boldface limits apply across the operating temperature range, 0°C to +85°C (HRZ) or -40°C to +100°C (IRZ). (Continued)**

Parameter	Symbol	Test Conditions	Min (Note 6)	Typ	Max (Note 6)	Unit
SDA Hold Time from SCL	t_{HD_DAT}	100kHz, (Note 8)	**300**			ns
		400kHz, (Note 8)	**300**			ns
SDA Set-Up Time from SCL	t_{SU_DAT}	100kHz, (Note 8)	**250**			ns
		400kHz, (Note 8)	**100**			ns
SCL Low Period	t_{LOW}	100kHz, (Note 8)	**4.7**			µs
		400kHz, (Note 8)	**1.3**			µs
SCL High Period	t_{HIGH}	100kHz, (Note 8)	**4**			µs
		400kHz, (Note 8)	**0.6**			µs
SDA/SCL Rise Time	t_{RISE}	100kHz, 400pF, maximum load, (Note 8)			**1000**	ns
		400kHz, 400pF, maximum load, (Note 8)			**300**	ns
SDA/SCL Fall Time	t_{FALL}	100kHz, 400pF, maximum load, (Note 8)			**300**	ns
		400kHz, 400pF, maximum load, (Note 8)			**300**	ns
SMBus Inactivity Time-Out (Note 8)		Maximum period without a SMBus write to MaxChargeVoltage or ChargeCurrent register		175		s

Notes:

6. Parameters with MIN and/or MAX limits are 100% tested at +25°C, unless otherwise specified. Temperature limits established by characterization and are not production tested.
7. Limits established by characterization and are not production tested.
8. Compliance to datasheet limits is assured by one or more methods: production test, characterization, and/or design.

2.5 Gate Driver Timing Diagram

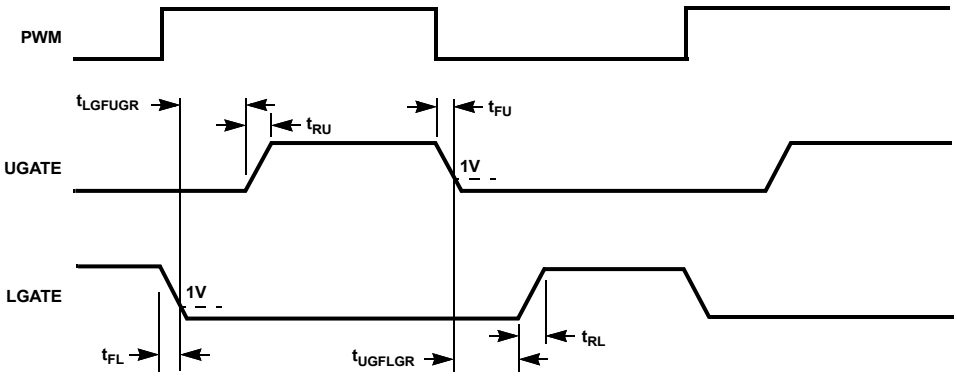

Figure 8. Gate Driver Timing Diagram

3. Typical Performance

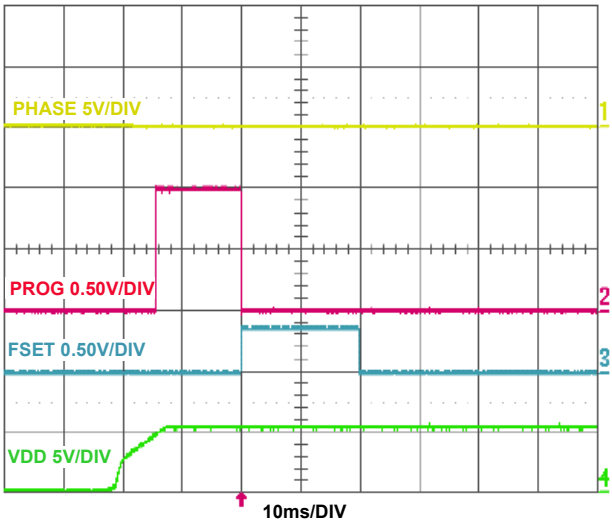

Figure 9. Power-Up, Read Prog, and FSET Resistors

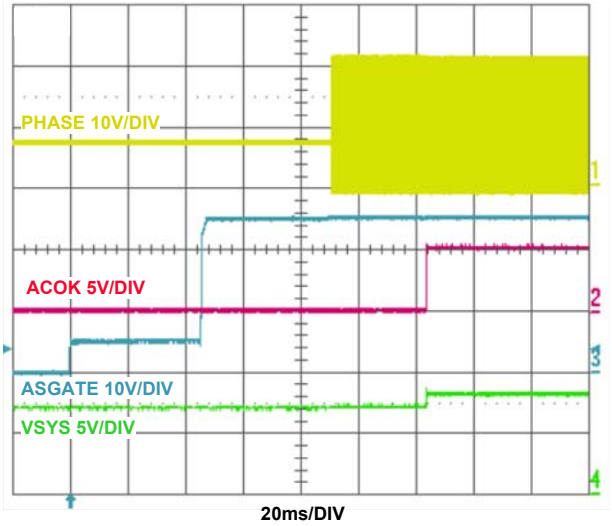

Figure 10. NVDC: Adapter Insertion Start-Up Sequence

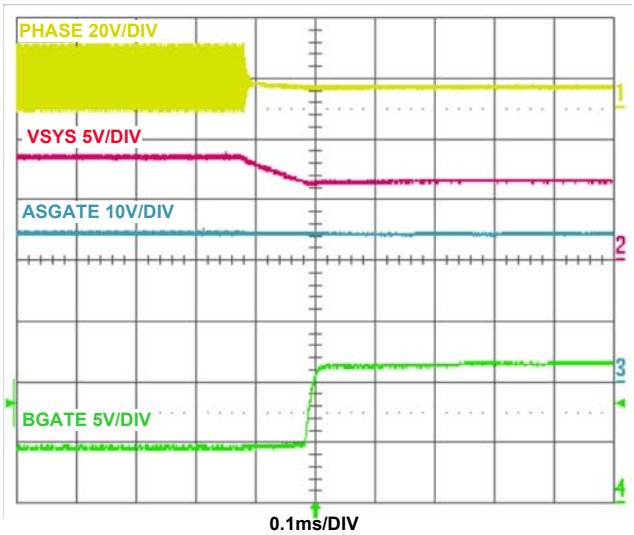

Figure 11. NVDC: Enter Learn Mode

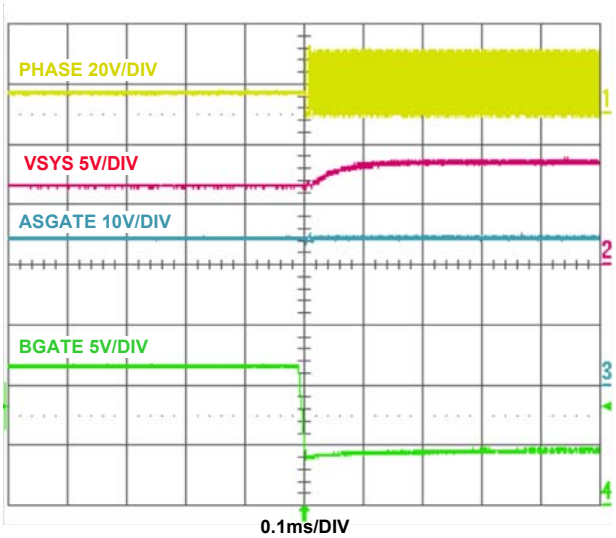

Figure 12. NVDC: Exit Learn Mode

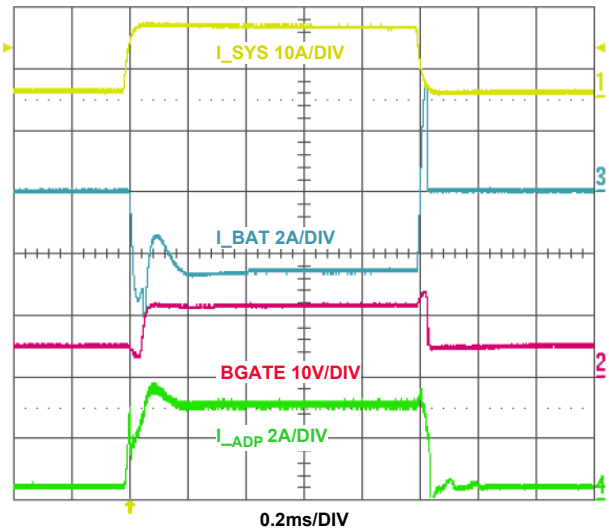

Figure 13. NVDC: System Voltage Regulation Loop and Turbo Mode Transient. VADP = 20V, AdapterCurrentLimit1 = 3.072A, V_{BAT} = 7V, MaxChargeVoltage = 8.192V, 1A to 12A System Load Step

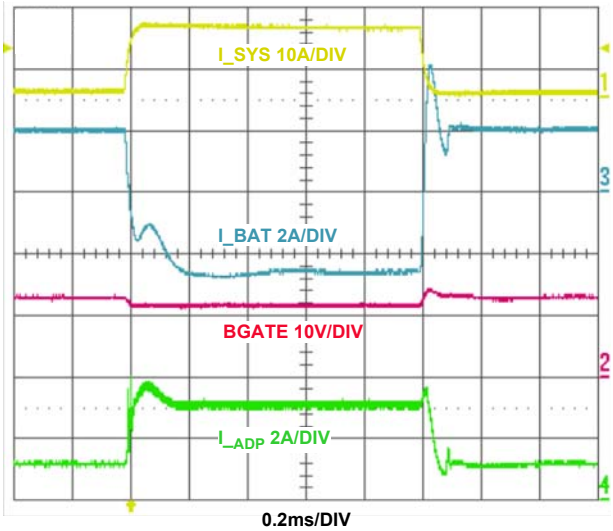

Figure 14. NVDC: Charging Current Limit Loop and Turbo Mode Transition. VADP = 20V, AdapterCurrentLimit1 = 3.072A, V_{BAT} = 7V, MaxChargeVoltage = 8.192V, ChargeCurrent = 2.016A, 1A to 12A System Load Step

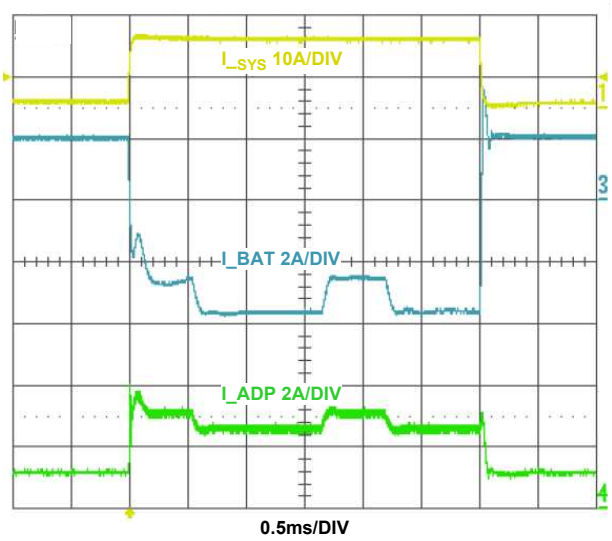

Figure 15. Two Level Adapter Current Limit. VADP = 20V, AdapterCurrentLimit1 = 2.56A, AdapterCurrentLimit2 = 3.072A, T2 = 500µs, T1 = 1ms, V_{BAT} = 7V, MaxChargeVoltage = 8.192V, ChargeCurrent = 2.016A, 1A to 12A System Load Step

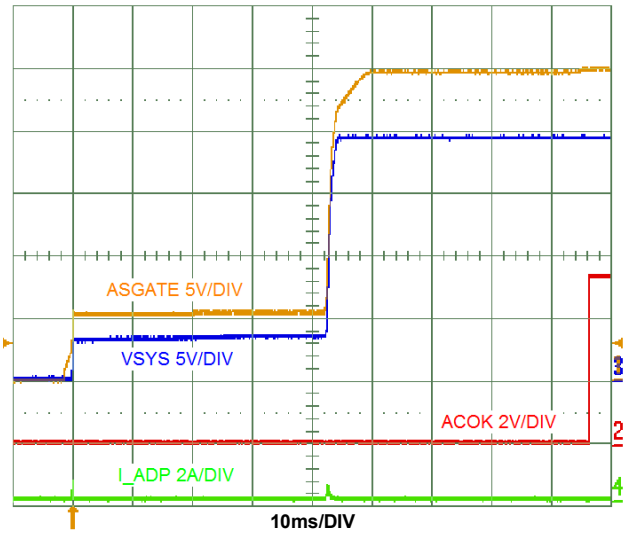

Figure 16. HPB: Adapter Insertion ASGATE Inrush Current Control. No Battery, VADP = 20V, 330µF System Rail Capacitance

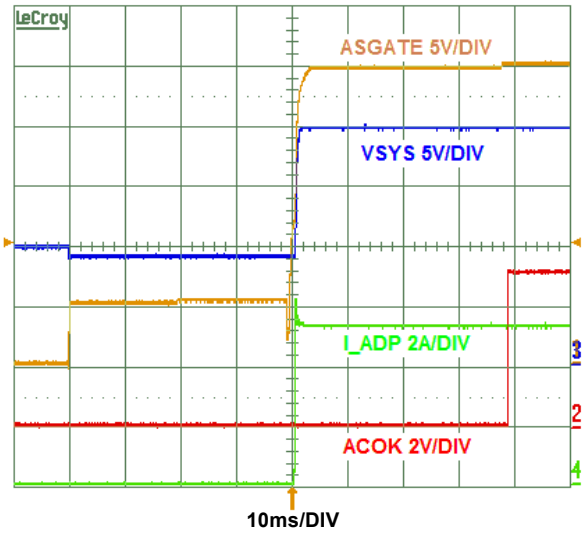

Figure 17. HPB: Adapter Insertion. V_{BAT} = 10V, VADP = 20V, ACLIM Setting = 5A, System Load = 5.5A

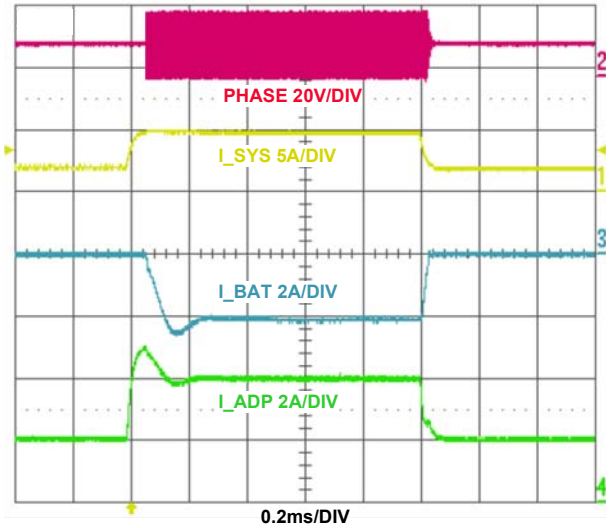

Figure 18. HPB: Charge Disabled, Enter Turbo Mode. VADP = 20V, V_{BAT} = 10V, AdapterCurrentLimit1 = 4.096A, 2A to 5A Load Step

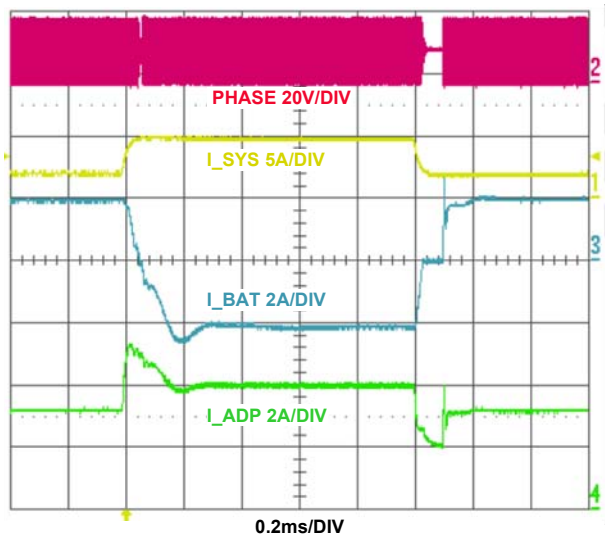

Figure 19. HPB: Charge Enabled, Enter Turbo Mode. VADP = 20V, V_{BAT} = 10V, AdapterCurrentLimit1 = 4.096A, ChargeCurrent = 2.016A, 2A to 5A Load Step

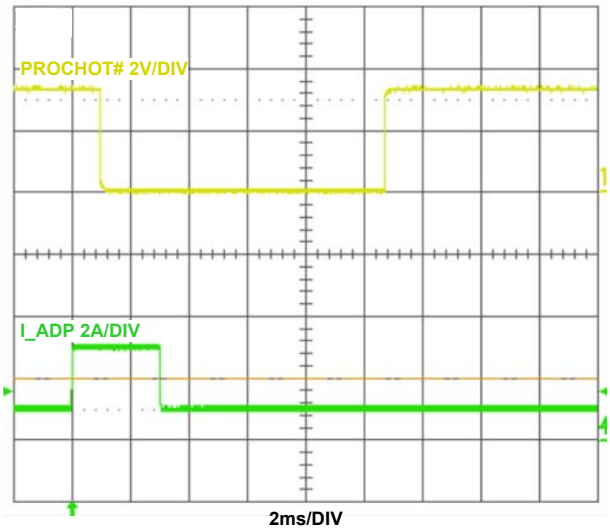

Figure 20. ACPROCHOT# Assertion. ACPROCHOT = 2.048A, PROCHOT# Debounce = 1ms, PROCHOT# Duration = 10ms

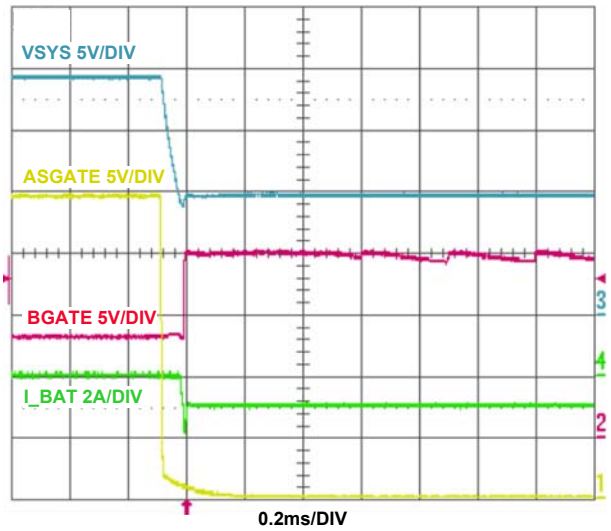

Figure 21. HPB: Enter Learn Mode

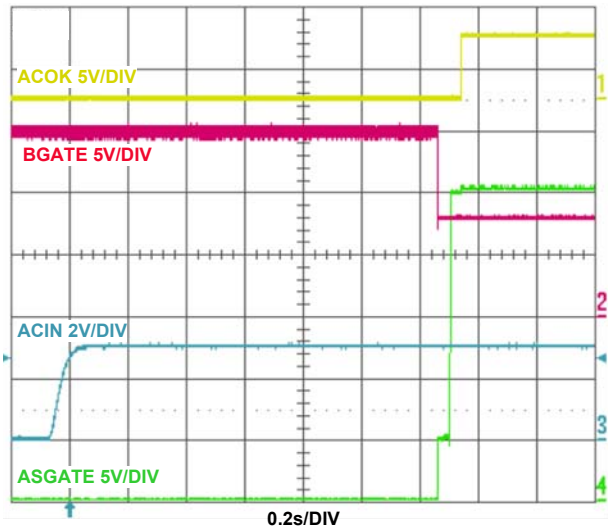

Figure 22. HPB: ASGATE Turning On Delay After Adapter Insertion. VADP = 20V, V_{BAT} = 10V, Control2 Register Bit<5> = 0

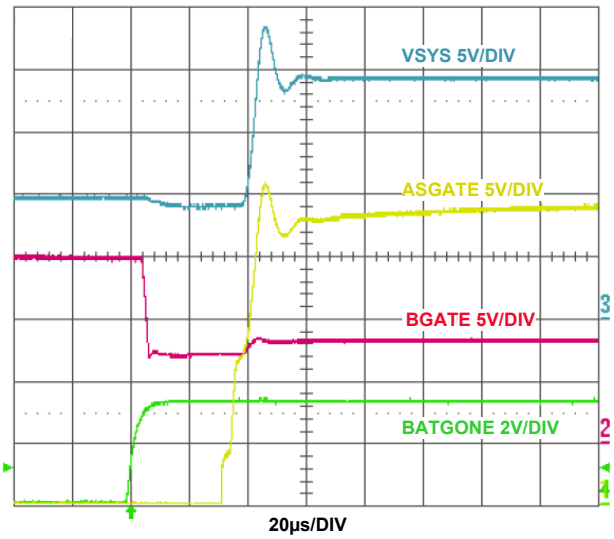

Figure 23. HPB: Battery Sudden Removal in Learn Mode by Pulling BATGONE to High

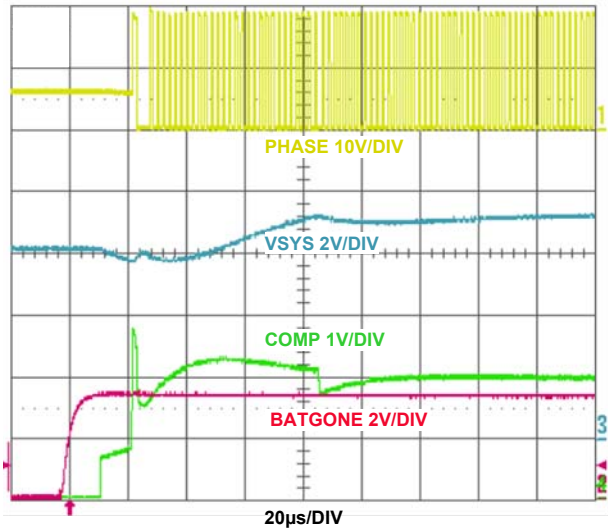

Figure 24. NVDC: Battery Sudden Removal in Learn Mode by Pulling BATGONE to High

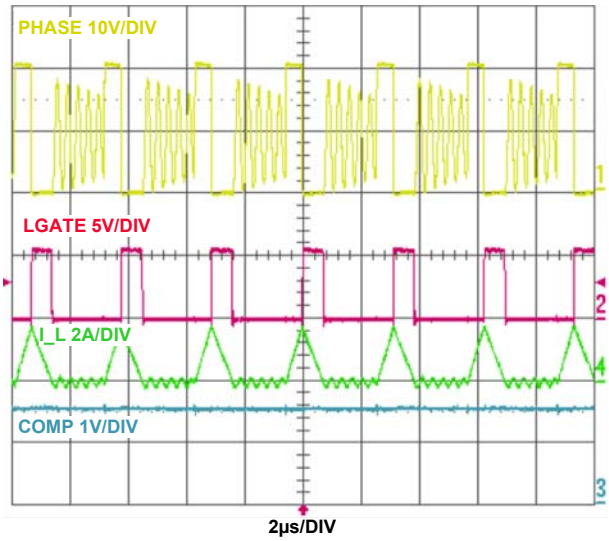

Figure 25. Discontinuous Conduction Mode (DCM) Switching

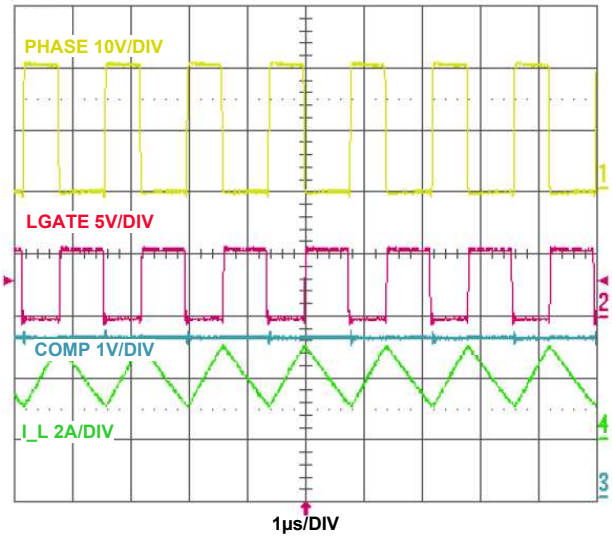

Figure 26. Continuous Conduction Mode (CCM) Switching

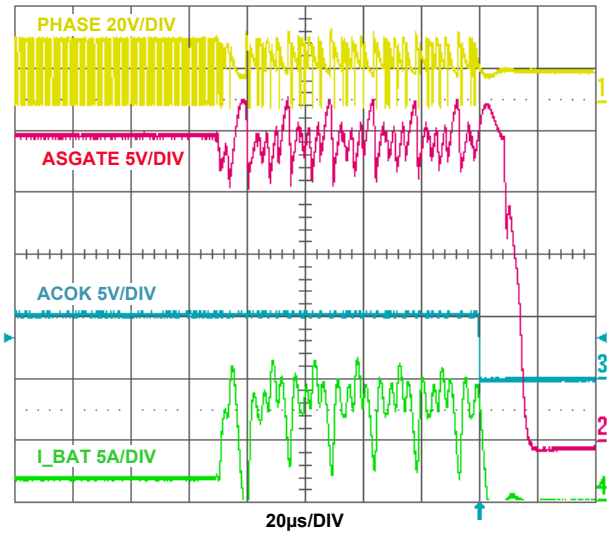

Figure 27. WOCP: Inductor Short During Charging. VADP = 20V, V_{BAT} = 10V, ChargeCurrent = 2A, CCLIM = 2V

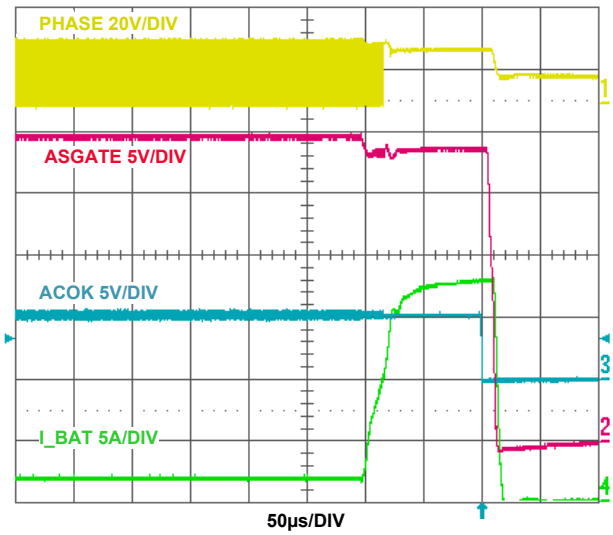

Figure 28. WOCP: High-Side MOSFET Short During Charging. VADP = 20V, V_{BAT} = 10V, ChargeCurrent = 2A, CCLIM = 2V

4. General SMBus Architecture

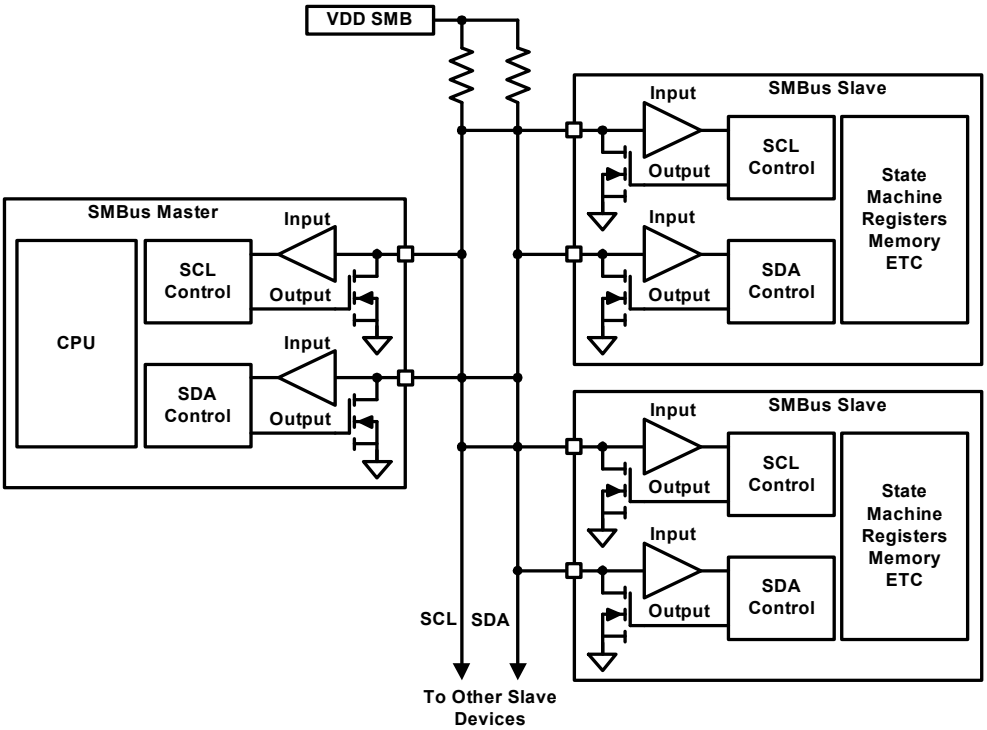

Figure 29. General SMBus Architecture

4.1 Data Validity

The data on the SDA line must be stable during the HIGH period of the SCL, unless generating a START or STOP condition. The HIGH or LOW state of the data line can only change when the clock signal on the SCL line is LOW. See Figure 30.

4.2 Start and Stop Conditions

The START condition is a HIGH to LOW transition of the SDA line while SCL is HIGH. See Figure 31.

The STOP condition is a LOW to HIGH transition on the SDA line while SCL is HIGH. A STOP condition must be sent before each START condition.

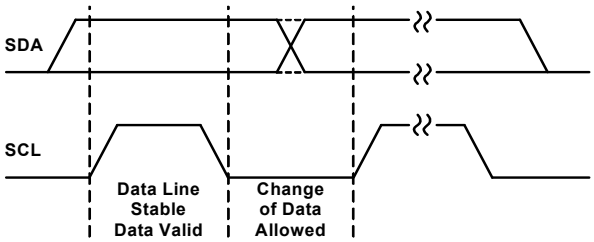

Figure 30. Data Validity

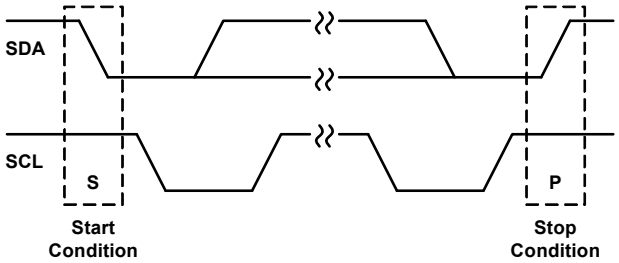

Figure 31. Start and Stop Waveforms

4.3 Acknowledge

Each address and data transmission uses 9-clock pulses. The ninth pulse is the acknowledge bit (ACK). After the start condition, the master sends seven slave address bits and a R/$\overline{W}$ bit during the next 8-clock pulses. During the 9-clock pulse, the device that recognizes its own address holds the data line low to acknowledge (as shown in Figure 32). The acknowledge bit is also used by both the master and the slave to acknowledge receipt of register addresses and data.

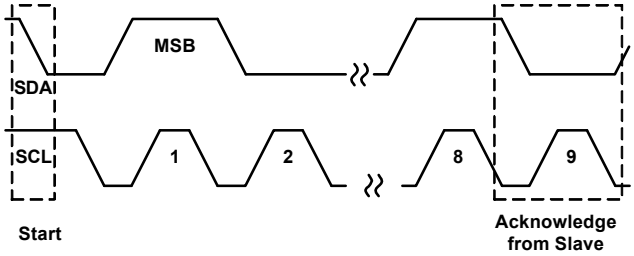

Figure 32. Acknowledge on the SMBus

4.4 SMBus Transactions

All transactions start with a control byte sent from the SMBus master device. The control byte begins with a START condition, followed by seven bits of slave address (0001001 for the ISL95521B) and the R/$\overline{W}$ bit. The R/$\overline{W}$ bit is 0 for a WRITE or 1 for a READ. If any slave device on the SMBus bus recognizes its address, it acknowledges by pulling the Serial Data (SDA) line low for the last clock cycle in the control byte. If no slave exists at that address or it is not ready to communicate, the data line is “1”, indicating a Not Acknowledge condition.

After the control byte is sent and the ISL95521B acknowledges it, the second byte sent by the master must be a register address byte such as 0x14 for the ChargeCurrent register. The register address byte tells the ISL95521B which register the master writes or reads. See Table 2 for details of the registers. When the ISL95521B receives a register address byte, it responds with an acknowledge.

4.5 Byte Format

Every byte put on the SDA line must be eight bits long and must be followed by an acknowledge bit. Data is transferred with the Most Significant Bit (MSB) first and the Least Significant Bit (LSB) last. The LO BYTE data is transferred before the HI BYTE data. For example, when writing 0x41A0, 0xA0 is written first and 0x41 is sent second.

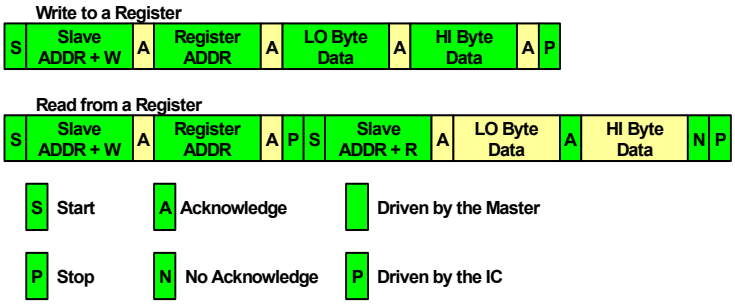

Figure 33. SMBus Read and Write Protocol

4.6 SMBus and I^{2}C Compatibility

The ISL95521B SMBus minimum input logic high voltage is 2V, so it is compatible with I^{2}C that has higher than a 2V pull-up power supply.

The ISL95521B SMBus registers are 16 bits, so it is compatible with 16 bits I^{2}C or 8 bits I^{2}C with an auto-increment capability.

5. ISL95521B SMBus Commands

The ISL95521B receives control inputs from the SMBus interface after Power-On Reset (POR). The serial interface complies with System Management Bus Specification, which can be downloaded from www.smbus.org. The ISL95521B uses the SMBus Read Word and Write Word protocols shown in Figure 33 on page 32 to communicate with the host system and a smart battery. The ISL95521B is an SMBus slave device and does not initiate communication on the bus. It responds to the 7-bit address 0b0001001_:

Read address = 0b00010011 (0X13H)
Write address = 0b00010010 (0X12H)

The data (SDA) and clock (SCL) pins have Schmitt-trigger inputs that can accommodate slow edges. Choose pull-up resistors for SDA and SCL to achieve rise times according to the SMBus specifications.

The ISL95521B allows users to change the SMBus registers to change some functions and options, as shown in Table 2.

The illustration in this datasheet is based on current sensing resistors R_{s1} = 10mΩ and R_{s2} = 10mΩ unless specified otherwise. For other current sensing resistor specifications, see Table 18 on page 49 a for more information.

Table 2. Registers Summary (R_{s1} = 10mΩ and R_{s2} = 10mΩ)

Register Names	Register Address	Read/ Write	# of Bits	Description	POR Bit State
ChargeCurrentLimit	0x14H	R/W	8	Bits<12:5> are used. If Bit<0> is interpreted as 1mA, the resolution is 32mA and the POR default value is 0A.	<12:5> 00000000
AdapterCurrentLimit1	0x3FH	R/W	6	Bits<12:7> are used. If Bit<0> is interpreted as 1mA, the resolution is 128mA and the POR default value is 8.064A.	<12:7> 111111
AdapterCurrentLimit2	0x3BH	R/W	6	Bits<12:7> are used. If Bit<0> is interpreted as 1mA, the resolution is 128mA and the POR default value is 8.064A.	<12:7> 111111
T1	0x37H	R/W	3	Bits<2:0> are used. If 2-level adapter current limit function is enabled and is tripped, T1 configures the effective duration of AdapterCurrentLimit1 register. POR default value is 500µs.	<2:0> 110
T2	0x38H	R/W	3	Bits<2:0> are used. If 2-level adapter current limit function is enabled and is tripped, T2 configures the effective duration of AdapterCurrentLimit2 register. POR default value is 100µs.	<2:0> 001
MaxChargeVoltage	0x15H	R/W	11	Bits<14:4> are used. If Bit<0> is interpreted as 1mV, resolution is 16mV. The POR default value is based on PROG pin cell number programming: 2-cell: 8.192V 3-cell: 12.288V 4-cell: 16.4V The MaxChargeVoltage register should always be programmed higher than the MinChargeVoltage register.	
MinChargeVoltage	0x3EH	R/W	6	Bits<13:8> are used. If Bit<0> is interpreted as 1mV, resolution is 256mV. The POR default value is based on PROG pin cell number programming: 2-cell: 5.376V 3-cell: 8.064V 4-cell: 10.752V The MinChargeVoltage register should always be programmed lower than the MaxChargeVoltage register.	

Table 2. Registers Summary (R_{s1} = 10mΩ and R_{s2} = 10mΩ) (Continued)

Register Names	Register Address	Read/ Write	# of Bits	Description	POR Bit State
PROCHOT# Debounce	0x39H	R/W	2	Bits<1:0> are used. Set the debounce time before asserting the PROCHOT# signal for NTC_PROCHOT#, ACPROCHOT# and DCPROCHOT#. POR default value is 100µs.	<1:0> 01
PROCHOT# Duration	0x3AH	R/W	3	Bits<2:0> are used. Set the minimum duration of PROCHOT# signal latch-up when it is asserted. POR default value is 10ms.	<2:0> 011
ACPROCHOT	0x47H	R/W	6	Bits<12:7> are used. Set PROCHOT# threshold for adapter overcurrent condition. If Bit<0> is interpreted as 1mA, resolution is 128mA and the POR default value is 6.144A.	<12:7> 110000
DCPROCHOT	0x48H	R/W	6	Sets PROCHOT# threshold for battery over-discharging current condition. Bits<12:7> are used. If Bit<0> is interpreted as 1mA, resolution is 128mA and the POR default value is 4.096A.	<12:7> 100000
Control1	0x3DH	R/W	16	See Control1 register Table 13.	
Control2	0x3CH	R/W	12	See Control2 register Table 14.	
Information1	0x46H	R	8	Various information reported over SMBus. See Information1 register Table 15.	
Information2	0x45H	R/W	8	PROG pin resistor reading result report. Also configures the 20mΩ current sensing resistor option. See Information2 register Table 16.	
ManufacturerID	0xFEH	R		ASCII for “I”.	0x49H
DeviceID	0xFFH	R			0x09H

5.1 Setting Charging Current Limit

To set the charging current limit, write a 16-bit ChargeCurrentLimit command (0X14H or 0b00010100) using the Write Word protocol shown in Figure 33 on page 32 and the data format shown in Table 3.

The ISL95521B limits the charging current by limiting the V_{CSOP} - V_{CSON} voltage. By using the recommended current sense resistor values shown in Table 17 on page 48, the register’s LSB always translates to 1mA of charging current. The ChargeCurrentLimit register accepts any charging current command however, only the valid register bits are written to the register. Renesas recommends setting the charging current limit lower than 96mA.

After POR, the ChargeCurrentLimit register is reset to 0x0000H. To set the battery charging current value, write a valid, non-zero number to the ChargeCurrentLimit register. The ChargeCurrentLimit register can be read back to verify its content.

Tables 20 and 21 on page 55 show the conditions to enable fast charging according to the ChargeCurrentLimit register setting for the HPB configuration and the NVDC configuration, respectively.

Table 3. ChargeCurrentLimit Register 0x14H (R_{s1} = 10mΩ and R_{s2} = 10mΩ). (See Table 18 on page 49 for other configurations)

Bit	Description
<4:0>	Not used
<5>	0 = Add 0mA of charging current limit. 1 = Add 32mA of charging current limit.
<6>	0 = Add 0mA of charging current limit. 1 = Add 64mA of charging current limit.
<7>	0 = Add 0mA of charging current limit. 1 = Add 128mA of charging current limit.

Table 3. ChargeCurrentLimit Register 0x14H (R_{s1} = 10mΩ and R_{s2} = 10mΩ). (See Table 18 on page 49 for other configurations) (Continued)

Bit	Description
<8>	0 = Add 0mA of charging current limit. 1 = Add 256mA of charging current limit.
<9>	0 = Add 0mA of charging current limit. 1 = Add 512mA of charging current limit.
<10>	0 = Add 0mA of charging current limit. 1 = Add 1024mA of charging current limit.
<11>	0 = Add 0mA of charging current limit. 1 = Add 2048mA of charging current limit.
<12>	0 = Add 0mA of charging current limit. 1 = Add 4096mA of charging current limit.
<15:13>	Not used

5.2 Setting Adapter Current Limit

To set the adapter current limit, write a 16-bit AdapterCurrentLimit1 command (0x3FH or 0b00111111) and/or AdapterCurrentLimit2 command (0x3BH or 0b00111011) using the Write Word protocol shown in Figure 33 on page 32 and the data format shown in Table 4.

The ISL95521B limits the adapter current by limiting the V_{CSIP} - V_{CSIN} voltage. By using the recommended current sense resistor value as Table 17 shows, the register's LSB always translates to 1mA adapter current. Any adapter current limit command is accepted, however, only the valid register bits are written to the AdapterCurrentLimit1 and AdapterCurrentLimit2 registers. The minimum adapter current limit command is 128mA and a 0A command is rejected.

After POR, the AdapterCurrentLimit1 and AdapterCurrentLimit2 register are reset to 0x1F80. The AdapterCurrentLimit1 and AdpaterCurrentLimit2 registers can be read back to verify its content.

To set a second level adapter current limit, write a 16-bit AdapterCurrentLimit2 (0x3BH or 0b00111011) command using the Write Word protocol shown in Figure 33 on page 32 and the data format as shown in Table 4.

The AdapterCurrentLimit2 register has the same specification as the AdapterCurrentLimit1 register. See "Two-Level Adapter Current Limit" on page 56 for operation details.

Table 4. AdapterCurrentLimit1 Register 0x3FH and AdapterCurrentLimit2 Register 0x3BH (R_{s1} = 10mΩ and R_{s2} = 10mΩ)

Bit	Description
<6:0>	Not used
<7>	0 = Add 0mA of adapter current limit. 1 = Add 128mA of adapter current limit.
<8>	0 = Add 0mA of adapter current limit. 1 = Add 256mA of adapter current limit.
<9>	0 = Add 0mA of adapter current limit. 1 = Add 512mA of adapter current limit.
<10>	0 = Add 0mA of adapter current limit. 1= Add 1024mA of adapter current limit.
<11>	0 = Add 0mA of adapter current limit. 1 = Add 2048mA of adapter current limit.
<12>	0 = Add 0mA of adapter current limit. 1 = Add 4096mA of adapter current limit.
<15:13>	Not used

5.3 Setting Two-Level Adapter Current Limit Duration

For a two-level adapter current limit, write a 16-bit T1 command (0x37H or 0b00110111) using the Write Word protocol shown in Figure 33 and the data format shown in Table 5 to set the AdapterCurrentLimit1 duration as the adapter current limit. Write a 16-bit T2 command (0x38H or 0b00111000) to set AdapterCurrentLimit2 duration as the adapter current limit. The T1 register and T2 register accept any command, however, only the valid register bits are written. See "Two-Level Adapter Current Limit" on page 56 for detailed operation.

Table 5. T1 Register 0x37H

Bit	Description
<2:0>	000 = 0ms 001 = 20ms 010 = 15ms 011 = 10ms 100 = 5ms 101 = 1ms 110 = 0.5ms 111 = 0.1ms
<15:3>	Not used

Table 6. T2 Register 0x38H

Bit	Description
<2:0>	000 = 15µs 001 = 100µs 010 = 500µs 011 = 1ms 100 = 300µs 101 = 750µs 110 = 3ms 111 = 10ms
<15:3>	Not used

5.4 Setting Maximum Charging Voltage

To set the maximum charging voltage, write a 16-bit MaxChargeVoltage command (0X15H or 0b00010101) using the Write Word protocol shown in Figure 33 on page 32 and the data format as shown in Table 7.

The maximum charging voltage range is 7.168V to 18.432V. The MaxChargeVoltage register accepts any voltage command however, only the valid register bits are written to the register.

The MaxChargeVoltage register sets the battery full charging voltage limit. For the NVDC configuration, the MaxChargeVoltage register setting is also the system bus voltage regulation point when the battery is present but is not in charge. See "NVDC Charger System Voltage Regulation" on page 57 for details.

The CSON pin senses the battery voltage for maximum charging voltage regulation. For NVDC configuration, the CSON pin is also the system bus voltage regulation sense point.

Table 7. MaxChargeVoltage Register 0x15H

Bit	Description
<3:0>	Not used
<4>	0 = Add 0mV of charging voltage. 1 = Add 16mV of charging voltage.
<5>	0 = Add 0mV of charging voltage. 1 = Add 32mV of charging voltage.
<6>	0 = Add 0mV of charging voltage. 1 = Add 64mV of charging voltage.

Table 7. MaxChargeVoltage Register 0x15H (Continued)

Bit	Description
<7>	0 = Add 0mV of charging voltage. 1 = Add 128mV of charging voltage.
<8>	0 = Add 0mV of charging voltage. 1 = Add 256mV of charging voltage.
<9>	0 = Add 0mV of charging voltage. 1 = Add 512mV of charging voltage.
<10>	0 = Add 0mV of charging voltage. 1 = Add 1024mV of charging voltage.
<11>	0 = Add 0mV of charging voltage. 1 = Add 2046mV of charging voltage.
<12>	0 = Add 0mV of charging voltage. 1 = Add 4096mV of charging voltage.
<13>	0 = Add 0mV of charging voltage. 1 = Add 8192mV of charging voltage.
<14>	0 = Add 0mV of charging voltage. 1 = Add 16384mV of charging voltage.
<15>	Not used

5.5 Setting Minimum Charging Voltage

To set the minimum charging voltage, write a 16-bit MinChargeVoltage command (0x3EH or 0b00111110) using the Write Word protocol shown in Figure 33 and the data format as shown in Table 8.

The minimum charging voltage range is 2.048V to 16.128V. The MinChargeVoltage register accepts any voltage command, however, only the valid register bits are written to the register. The MinChargeVoltage register value should be set lower than the MaxChargeVoltage register value.

The MinChargeVoltage register sets the battery voltage threshold for entry and exit of the Trickle Charge mode. The VBAT pin senses the battery voltage to compare with the MinChargeVoltage register setting. See "Trickle Charging" on page 57 for details.

For the NVDC configuration, the MinChargeVoltage register setting is also the system voltage regulation point when the battery is not present. The CSON pin is the system voltage regulation sense point. See "NVDC Charger System Voltage Regulation" on page 57 for details.

Table 8. MinChargeVoltage Register 0x3EH

Bit	Description
<7:0>	Not used
<8>	0 = Add 0mV of charging voltage. 1 = Add 256mV of charging voltage.
<9>	0 = Add 0mV of charging voltage. 1 = Add 512mV of charging voltage.
<10>	0 = Add 0mV of charging voltage. 1 = Add 1024mV of charging voltage.
<11>	0 = Add 0mV of charging voltage. 1 = Add 2048mV of charging voltage.
<12>	0 = Add 0mV of charging voltage. 1 = Add 4096mV of charging voltage.
<13>	0 = Add 0mV of charging voltage. 1 = Add 8192mV of charging voltage.
<15:14>	Not used

5.6 Setting PROCHOT# Debounce Time

To set the PROCHOT# signal debounce time before its assertion for ACPROCHOT, DCPROCHOT, and NTC_PROCHOT, write a 16-bit PROCHOT# debounce time (0x39H or 0b00111001) using the Write Word protocol shown in Figure 33 and the data format as shown in Table 9. The PROCHOT# Debounce Time register accepts any command, however, only the valid register bits are written.

The low system voltage PROCHOT# has a fixed debounce time as 10µs.

Table 9. PROCHOT# Debounce Register 0x39H

Bit	Description
<1:0>	00 = 10µs 01 = 100µs 10 = 500µs 11 = 1ms
<15:2>	Not used

5.7 Setting PROCHOT# Duration

To set the PROCHOT# signal latch-up duration when it is asserted for ACPROCHOT, DCPROCHOT, and NTC_PROCHOT and low system voltage PROCHOT, write a 16-bit PROCHOT# Duration command (0x3AH or 0b01111010) using the Write Word protocol shown in Figure 33 and the data format shown in Table 10. The PROCHOT# Duration register accepts any command however, only the valid register bits are written.

Table 10. PROCHOT# Duration Register 0x3Ah

Bit	Description
<2:0>	000 = 0ms 001 = 20ms 010 = 15ms 011 = 10ms 100 = 5ms 101 = 1ms 110 = 500µs 111 = 100µs
<15:3>	Not used

5.8 Setting PROCHOT# Threshold for Adapter Overcurrent Condition

To set the PROCHOT# assertion threshold for the adapter overcurrent condition, write a 16-bit ACPROCHOT command (0x47H or 0b01000111) using the Write Word protocol shown in Figure 33 on page 32 and the data format shown in Table 11. By using the recommended current sense resistor value as Table 17 on page 48 shows, the register's LSB always translates to 1mA adapter current. The ACPROCHOT register accepts any command, however, only the valid register bits are written to the register.

After POR, the ACPROCHOT register is reset to 0x1800H. The ACPROCHOT register can be read back to verify its content.

If the adapter current exceeds the ACPROCHOT register setting, the PROCHOT# signal asserts after the debounce time programmed by the PROCHOT# Debounce register and latches on for a minimum time programmed by the PROCHOT# Duration register.

For HPB configuration, the ACPROCHOT function is disabled when it is in Standby mode because Standby mode turns off the internal comparator reference, which is indicated by Information1 register Bit<8>.

Table 11. ACPROCHOT Register 0x47H (R_{s1} = 10mΩ and R_{s2} = 10mΩ). (See Table 18 on page 49 for other configurations)

Bit	Description
<6:0>	Not used
<7>	0 = Add 0mA of ACPROCHOT threshold. 1 = Add 128mA of ACPROCHOT threshold.
<8>	0 = Add 0mA of ACPROCHOT threshold. 1 = Add 256mA of ACPROCHOT threshold.
<9>	0 = Add 0mA of ACPROCHOT threshold. 1 = Add 512mA of ACPROCHOT threshold.
<10>	0 = Add 0mA of ACPROCHOT threshold. 1 = Add 1024mA of ACPROCHOT threshold.
<11>	0 = Add 0mA of ACPROCHOT threshold. 1 = Add 2048mA of ACPROCHOT threshold.
<12>	0 = Add 0mA of ACPROCHOT threshold. 1 = Add 4096mA of ACPROCHOT threshold.
<15:13>	Not used

5.9 Setting PROCHOT# Threshold for Battery Over-Discharging Current Condition

To set the PROCHOT# signal assertion threshold for battery over-discharging current condition, write a 16-bit DCPROCHOT command (0x48H or 0b01001000) using the write word protocol shown in Figure 33 and the data format shown in Table 12. By using the recommended current sense resistor value as Table 17 on page 48 shows, the register's LSB always translates to 1mA adapter current. The DCPROCHOT register accepts any command, however, only the valid register bits are written to the register.

After POR, the DCPROCHOT register is reset to 0x1000H. The DCPROCHOT register can be read back to verify its content.

If the battery discharging current exceeds the DCPROCHOT register setting, The PROCHOT# signal asserts after the debounce time programmed by the PROCHOT# Debounce register and latches on for a minimum time programmed by the PROCHOT# Duration register.

In Battery Only mode, DCPROCHOT function works only when PSYS or NTC is enabled, because enabling PSYS or NTC activates the internal comparator reference. The Information1 register bit<8> indicates if the internal comparator reference is active or not.

When the adapter is present, the internal comparator reference is always active unless it is in Standby mode for the HPB configuration.

Table 12. DCPROCHOT Register 0x48H (R_{s1} = 10mΩ and R_{s2} = 10mΩ). (See Table 18 on page 49 for other configurations)

Bit	Description
<6:0>	Not used
<7>	0 = Add 0mA of DCPROCHOT threshold. 1 = Add 128mA of DCPROCHOT threshold.
<8>	0 = Add 0mA of DCPROCHOT threshold. 1 = Add 256mA of DCPROCHOT threshold.
<9>	0 = Add 0mA of DCPROCHOT threshold. 1 = Add 512mA of DCPROCHOT threshold.
<10>	0 = Add 0mA of DCPROCHOT threshold. 1 = Add 1024mA of DCPROCHOT threshold.

Table 12. DCPROCHOT Register 0x48H (R_{s1} = 10mΩ and R_{s2} = 10mΩ). (See Table 18 on page 49 for other configurations) (Continued)

Bit	Description
<11>	0 = Add 0mA of DCPROCHOT threshold. 1 = Add 2048mA of DCPROCHOT threshold.
<12>	0 = Add 0mA of DCPROCHOT threshold. 1 = Add 4096mA of DCPROCHOT threshold.
<15:13>	Not used

5.10 Control Registers

To change certain functions or options after POR, write a 16-bit control command to Control1 register (0x3DH or 0b00111101) or Control2 register (0x3CH or 0b00111100) using the Write Word protocol shown in Figure 33 on page 32 and the data format shown in Tables 13 and 14, respectively.

Table 13. Control1 Register 0x3DH

Bit	Bit Name	Description	POR State
<0>	Standby Mode	1 = The charger enters Standby mode. 0 = The charger exits Standby mode. The Standby mode control bit is valid for HPB configuration only and is valid only when adapter is present; it has no effect for NVDC configuration. When the ISL95521B enters Standby mode, it turns off the internal references (indicated by Information1 register Bit<8>) and stops switching to enter a low power consumption mode with minimum quiescent current. If PSYS is already enabled, it cannot enter Standby mode.	0
<1>	Learn Mode	1 = The charger enters Learn mode. 0 = The charger exits Learn mode. The SMBus Learn mode control is valid only when PROG pin is not pulled to 5V after POR.	0
<2>	AMON	1 = Turn on adapter current monitor AMON function. 0 = Turn off adapter current monitor AMON function.	0
<3>	BMON	1 = Turn on battery discharging current monitor BMON function. 0 = Turn off battery discharging current monitor BMON function. To avoid the battery being overdischarged, the BMON function is disabled if the battery voltage is less than 3.5V.	0
<4>	PSYS	1 = Turn on system power monitor PSYS function. 0 = Turn off system power monitor PSYS function. The PSYS function does not include the power provided by the battery if the battery voltage is less than 3.5V. For the HPB configuration, when an adapter is present, if it has already entered Standby mode, PSYS cannot be turned on.	0

Table 13. Control1 Register 0x3DH (Continued)

Bit	Bit Name	Description	POR State
<5>	Low System Voltage Detection	1 = Turn on low system voltage detect function. 0 = Turn off low system voltage detect function. Bit<5> is valid only when the internal comparator reference is active, which is indicated by Information1 register Bit<8>. In Battery Only mode, the low system voltage detection function works only when PSYS or NTC is enabled, because enabling PSYS or NTC activates the internal comparator reference. When an adapter is present, the internal comparator reference is always active unless it is in Standby mode for HPB configuration. For HPB configuration, ISL95521B senses the system voltage through the CSIP pin. For NVDC configuration, ISL95521B senses the system voltage through the CSON pin.	0
<6>	NTC	1 = Turn on the NTC function. 0 = Turn off the NTC function. When the NTC function is turned on, if the NTC pin voltage is less than 170mV, the PROCHOT# signal asserts after the debounce time programmed by the PROCHOT# Debounce register and latches on for a minimum time programmed by the PROCHOT# Duration register. For the NTC function to work, the internal reference indicated by Information1 register bit<8> needs to be active. When an adapter is present, the NTC function is always turned on unless it is in Standby mode then Bit<6> is invalid. In Battery Only mode, Bit<6> is valid to turn on or off the NTC function only when PSYS is turned off; the NTC function is always turned on automatically if PSYS is turned on.	0
<7>	Fast Learn Mode Exit	1 = Fast Learn Mode Exit. 0 = Slow Learn Mode Exit. Fast Learn Mode Exit turns on the ASGATE MOSFETs instantly without going through the ASGATE soft-start turning on procedure when BATGONE pin voltage goes from logic LOW to HIGH. Slow Learn Mode Exit goes through the ASGATE soft-start turning on procedure 163ms after the BATGONE pin voltage goes from logic LOW to HIGH. The Fast Learn Mode Exit control bit is valid only when the battery is removed during Learn mode and it only works for the HPB configuration and has no effect for the NVDC configuration.	0
<9:8>	Threshold for Low System Voltage Detection	If the Control register Bit<5> = 1, Bits<9:8> programs the low system voltage detection threshold. If the system voltage is below this threshold, the PROCHOT# signal asserts after a fixed 10µs debounce time and latches on for a minimum time programmed by the PROCHOT# Duration register. 00 = 5.6V threshold. 01 = 6.06V threshold. 10 = 6.53V threshold. 11 = 7V threshold. Valid only when Control1 register Bit<5> = 1.	00

Table 13. Control1 Register 0x3DH (Continued)

Bit	Bit Name	Description	POR State
<10>	Turbo/Boost Mode	1 = Disable Turbo/Boost mode. 0 = Enable Turbo/Boost mode.	1
<11>	Charging Current WOCP	1 = Disable charging current way overcurrent protection function. 0 = Enable charging current way overcurrent protection function.	0
<12>	Enable Charging	0 = Disable charging. 1 = Enable charging.	1
<14:13>	Force the Number of Battery Cells in Series	Bits<14:13> can overwrite the number of battery cells in series that are programmed by the PROG pin. When Bit<14:13> is written, only the POR default MaxChargeVoltage register value and MinChargeVoltage register value change according to the cell number. The battery 4.6V/cell overvoltage protection threshold also changes according to the cell number. The MaxChargeVoltage register setting should always be smaller than battery overvoltage threshold 4.6V * cell#. Bits<14:13> if not used, keep its POR code based on the PROG pin cell# setting. 00 = Not available and is ignored if written. 01 = 2-cell. 10 = 3-cell. 11 = 4-cell.	PROG cell#
<15>	SMBus Timeout	The ISL95521B includes a timer to ensure the SMBus master is active and to prevent overcharging the battery. If the adapter is present and if the ISL95521B does not receive a write to the MaxChargeVoltage or ChargeCurrentLimit register within 175s, ISL95521B terminates charging. If a timeout occurs, writing the MaxChargeVoltage or ChargeCurrentLimit registers re-enables charging. 0 = Enable the SMBus timeout function. 1 = Disable the SMBus timeout function.	0

Table 14. Control2 Register 0x3CH

Bit	Bit Name	Description	POR State
<3:0>	Frequency Setting	Overwrite the switching frequency set by the FSET pin. See the default CCM switching frequency programming Table 19 on page 50 for the correlation. 1111 = 992kHz (equivalent to R_FSET = 0Ω) 1110 = 838kHz 1101 = 729kHz 1100 = 642kHz 1011 = 678kHz 1010 = 614kHz 1001 = 561kHz 1000 = 517kHz 0111 = 513kHz 0110 = 477kHz 0101 = 449kHz 0100 = 421kHz 0011 = 417kHz 0010 = 395kHz 0001 = 375kHz 0000 = Switching frequency set by FSET pin To keep the switching frequency set by the PROG pin resistor, leave Bit<3:0> as is or write code 0000, which sets the same frequency as the PROG pin resistor does.	0000

Table 14. Control2 Register 0x3CH (Continued)

Bit	Bit Name	Description	POR State
<4>	Release Adapter Current Limit when No Battery	When there is no battery, Bit<4> enables or releases the adapter current limit for the NVDC configuration. 0 = Enable adapter current limit function. 1 = Release adapter current limit function.	0
<5>	ASGATE Turn-On Delay	0 = Set restart ASGATE turn on delay to 1.3s. 1 = Set restart ASGATE turn on delay to 163ms. Bit<5> configures the ASGATE restart delay only in a fault condition (adapter OVP and WOCP). In normal operation after adapter plugged in, the ASGATE turn on delay is always 163ms, regardless of the Bit<5> setting.	0
<6>	Two-level Adapter Current Limit Function	0 = Disable two-level adapter current limit function. 1 = Enable two-level adapter current limit function.	1
<7> <12>	Trickle Charging Current	Bit<12> and Bit<7> can be combined together to change the trickle charging current value. Bit <12>:<7> = <0>:<0> = 256mA trickle charging current. <0>:<1> = 128mA trickle charging current. <1>:<0> = 128mA trickle charging current. <1>:<1> = 64mA trickle charging current. 64mA trickle charging current option is valid only for “R_{s1} = 10mΩ, R_{s2} = 10mΩ” and “R_{s1} = 20mΩ, R_{s2} = 20mΩ” configurations for both the NVDC charger and the HPB charger.	0:1
<8>	Adapter OVP	0 = Enable adapter OVP function; 1 = Disable adapter OVP function. If the adapter OVP function is enabled, the ISL95521B turns off ASGATE and pulls down ACOK when ACIN >3.5V.	0
<9>	PSYS Current Gain	For “R_{s1} = 10mΩ, R_{s2} = 5mΩ” and “R_{s1} = 10mΩ, R_{s2} = 10mΩ” configuration: 0 = 1.14µA/W 1 = 0.285µA/W For “R_{s1} = 20mΩ, R_{s2} = 10mΩ” and “R_{s1} = 20mΩ, R_{s2} = 20mΩ” configuration: 0 = 2.28µA/W 1 = 0.57µA/W	0
<10>	ACLIM Inrush Current Limit Time	0 = Set soft-start ACLIM inrush current limit period as 1ms when an adapter is plugged in. 1 = Set soft-start ACLIM inrush current limit period as 4ms when an adapter is plugged in.	0
<11>	BGATE Off Timing	Bit<11> is valid for the HPB configuration only. It changes the BGATE FET turn-off timing when an adapter is plugged in. 0 = Turn off BGATE FET according to battery voltage (see “Soft-Start” on page 50 for details). 1 = Turn off BGATE FET before turning on ASGATE FETs.	0
<13>	ACLIM Function	Bit<13> configures ACLIM to be functional all the time or only during ASGATE turn-on procedure to limit the inrush current. 0 = The ACLIM function is on all the time. 1 = The ACLIM function is off after ACOK assertion.	0

Table 14. Control2 Register 0x3CH (Continued)

Bit	Bit Name	Description	POR State
<15:14>	DCM LGATE Turning Off Timing	Bit<15:14> adjusts the LGATE turning off timing when the buck switcher is in DCM operation to minimize the MOSFETs body diode conduction time. By default, LGATE turns off when the inductor current is positive (from PHASE node to output). 00 = Earliest LGATE turning off when the PHASE pin voltage is about -6mV. 01 = Earlier LGATE turning off when the PHASE pin voltage is about -4mV. 10 = Early LGATE turning off when the PHASE pin voltage is about -2mV. 11 = Late LGATE turning off when the PHASE pin voltage is about 0mV.	00

5.11 Information Registers

To read the information register, write a 16-bit Information1 command (0x46H or 0b01000110) or Information2 command (0x45H or 0b01000101) using the Read Word protocol shown in Figure 33 on page 32 and the data format shown in Tables 15 and 16, respectively.

Table 15. Information1 Register 0x46H

Bit	Bit Name	W/R	Description
<0>	Adapter Present	R	0 = The adapter is not present. 1 = The adapter is present.
<1>	ASGATE On	R	0 = ASGATE is off. 1 = ASGATE is on.
<2>	VBAT<MinChargeVoltage	R	0 = VBAT>MinChargeVoltage. 1 = VBAT<MinChargeVoltage. Valid only when Information1 register Bit<8> = 1.
<3>	VSYS<Low System Voltage Setting	R	0 = VSYS>Low System Voltage Setting programmed by Control1 register Bit<9:8>. 1 = VSYS<Low System Voltage Setting programmed by Control1 register Bit<9:8>. Valid only when Information1 register Bit<8> = 1.
<4>	NTC_PROCHOT#	R	0 = NTC_PROCHOT# not asserted. 1 = NTC_PROCHOT# asserted. Valid only when Information1 register Bit<8> = 1.
<5>	In Trickle Charge Mode	R	0 = Not in Trickle Charge mode. 1 = In Trickle Charge mode. Bit<5> is valid for the NVDC configuration only.
<6>	In Turbo/Boost Mode	R	0 = Not in Turbo/Boost mode. 1 = In Turbo/Boost mode. For the NVDC configuration, if BGATE is already on before entering Turbo mode, BGATE stays on after entering Turbo mode; Bit<6> does not indicate Turbo mode in this case.
<7>	ACPROCHOT	R	0 = ACPROCHOT# not asserted. 1 = ACPROCHOT# asserted.
<8>	Reference Active	R	0 = Reference is not active. 1 = Reference is active. When Bit<8> = 1, Information Register Bits <4:2> are valid. When an adapter is present, the internal comparator reference is always active; unless it is in Standby mode for the HPB charger configuration. In Battery Only mode, the default internal reference is not active, unless PSYS or NTC is enabled.

Table 16. Information2 Register 0x45H

Bit	Bit Name	W/R	Description	POR State
<0> <8>	R_{s1}	W/R	If R_{s1} = 20mΩ (R_{s1} = 20mΩ and R_{s2} = 10mΩ or R_{s1} = 20mΩ and R_{s2} = 20mΩ), both Bit<8> and Bit<0> need to be programmed as 1 to have correct internal current sensing scaling. Bit<8>:<0>: <0>:<0> = R_{s1} = 10mΩ. <0>:<1> = R_{s1} = 10mΩ. <1>:<0> = R_{s1} = 10mΩ. <1>:<1> = R_{s1} = 20mΩ.	0:0
<3:1>			Not used. Internally hardwired as <3:1> = 010.	
<5:4>	Cell Number	R	00 = Not available. 01 = 2-cell. 10 = 3-cell. 11 = 4-cell.	
<6>	Current Sensing Resistor	R	0 = “R_{s1}:R_{s2} = 2:1” (R_{s1} = 10mΩ and R_{s2} = 5mΩ or R_{s1} = 20mΩ and R_{s2} = 10mΩ) 1 = “R_{s1}:R_{s2} = 1:1” (R_{s1} = 10mΩ and R_{s2} = 10mΩ or R_{s1} = 20mΩ and R_{s2} = 20mΩ) Together with Bit<8> and Bit<0> R_{s1} setting, it can be calculated that R_{s1} = 10mΩ or R_{s1} = 20mΩ.	
<7>	Charger Configuration	R	0 = HPB charger configuration. 1 = NVDC charger configuration.	
<15:9>			Not used.	

6. Application Information

6.1 R3 Modulator

The ISL95521B uses the Renesas Robust Ripple Regulator R3 modulation scheme. The R3 modulator combines the best features of fixed frequency PWM and hysteric PWM while eliminating many of their shortcomings. Figure 34 conceptually shows the R3 modulator circuit and Figure 35 shows the operation principles in steady state.

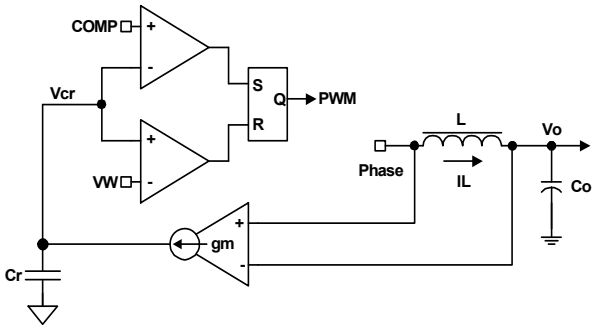

Figure 34. R3 Modulator

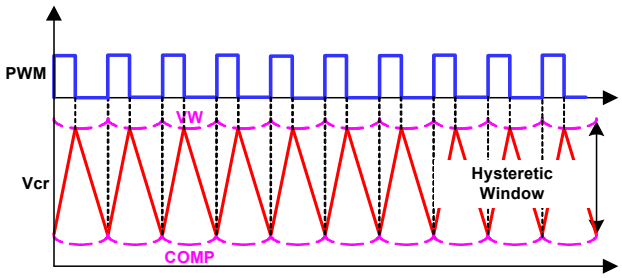

Figure 35. R3 Modulator Operation Principles in Steady State

There is a fixed voltage window between VW and COMP. This voltage window is called the VW window in the following discussion. The modulator charges the ripple capacitor C_r with a current source equal to $g_m(V_{IN} - V_o)$ during PWM on-time and discharges the ripple capacitor C_r with a current source equal to g_mV_o, during PWM off-time, where g_m is a gain factor. The C_r voltage, V_{cr}, therefore emulates the inductor current waveform. The modulator turns off the PWM pulse when V_{cr} reaches VW and turns on the PWM pulse when it reaches COMP.

Because the modulator works with V_{cr}, which is a large amplitude and noise free synthesized signal, it achieves lower phase jitter than conventional hysteretic mode modulator.

Figure 36 shows the operation principles during dynamic response. The COMP voltage rises during dynamic response, turning on PWM pulses earlier and more frequently. Temporarily, this operation allows for higher control loop bandwidth than a conventional fixed frequency PWM modulator at the same steady-state switching frequency.

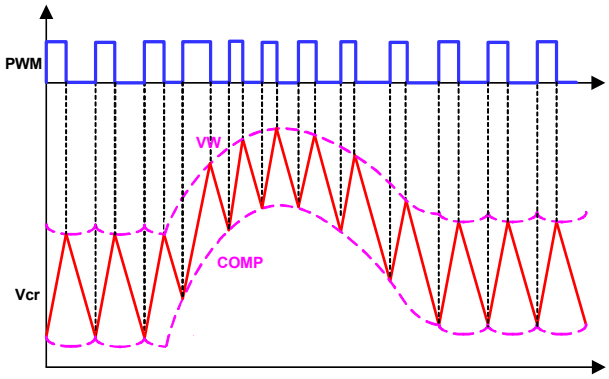

Figure 36. R3 Modulator Operation Principles in Dynamic Response

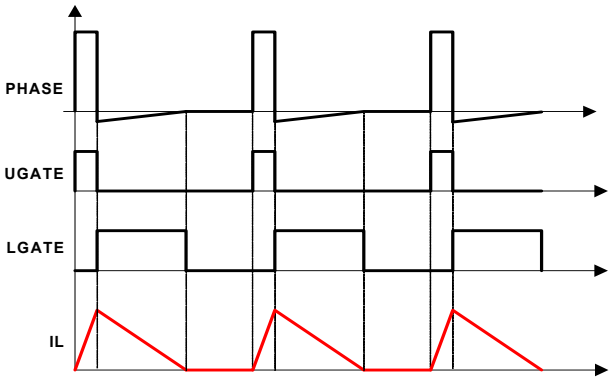

Figure 37. Diode Emulation

The R3 modulator can operate in Diode Emulation (DE) mode to increase light-load efficiency. In DE mode, the low-side MOSFET conducts when the current is flowing from source-to-drain and does not allow reverse current, emulating a diode. As shown in Figure 37, when LGATE is on, the low-side MOSFET carries current, creating

negative voltage on the phase node due to the voltage drop across the ON-resistance. The IC monitors the current by monitoring the phase node voltage. It turns off LGATE when the phase node voltage reaches zero to prevent the inductor current from reversing the direction and creating unnecessary power loss.

If the load current is light enough, as Figure 37 shows, the inductor current reaches and stays at zero before the next phase node pulse and the regulator is in Discontinuous Conduction Mode (DCM). If the load current is heavy enough, the inductor current never reaches 0A and therefore, the regulator is in CCM although the controller is in DE mode.

In DCM operation, to turn off LGATE when inductor current reaches near zero, the ISL95521B provides Control2 register Bit<15:14> to adjust the LGATE turning off timing. The default timing purposely turns off LGATE a little earlier than the inductor current zero crossing. The SMBus bit can adjust the timing more aggressively towards the precise zero-crossing point to minimize the MOSFETs body diode conduction time for higher efficiency at light load. However, it is not recommended to turn off LGATE after the inductor current zero crossing, which may feed energy back to the adapter side.

Figure 38 shows the operation principle in Diode Emulation mode at light load. The load gets incrementally lighter in the three cases from top to bottom. The PWM on-time is determined by the VW window size, therefore is the same, making the inductor current triangle the same in the three cases. The R3 modulator clamps the ripple capacitor voltage V_{cr} in DE mode to make it mimic the inductor current. It takes the COMP voltage longer to hit V_{cr}, naturally stretching the switching period. The inductor current triangles move further apart from each other such that the inductor current average value is equal to the load current. The reduced switching frequency helps increase light-load efficiency.

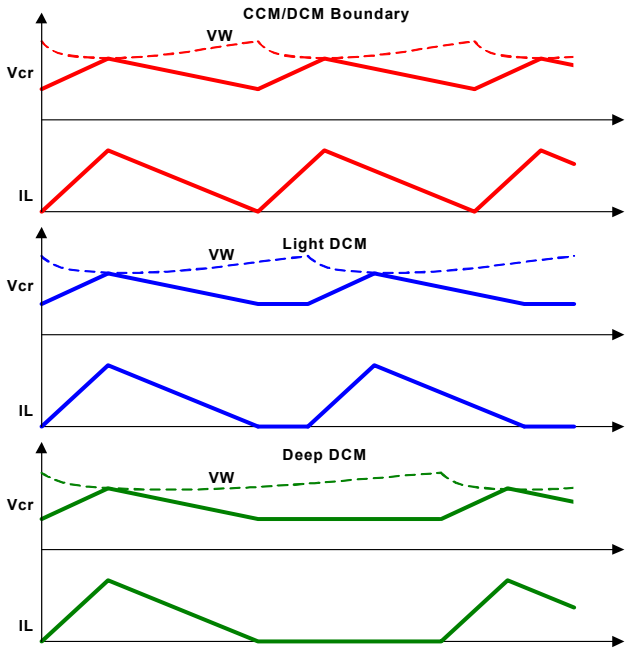

Figure 38. Period Stretching

6.2 Programming Charger Options

The resistor from the PROG pin to GND programs the configuration of the ISL95521B as an HPB charger or NVDC charger, as well as the default number of battery cells in series and the default values of the adapter and battery current sense resistors R_{s1} and R_{s2}. Table 17 shows the programming options.

Table 17. Prog Pin Programming Options

Prog-GND Resistance (kΩ) Typ (1% Standard Resistor)	Charger Type	Current Sense Resistor Value	Default # of Battery Cells in Series
0	NVDC	R_{s1}:R_{s2} = 2:1 R_{s1} = 10mΩ R_{s2} = 5mΩ or R_{s1} = 20mΩ R_{s2} = 10mΩ	3
22.6			4
38.3			2
69.8		R_{s1}:R_{s2} = 1:1 R_{s1} = 10mΩ R_{s2} = 10mΩ or R_{s1} = 20mΩ R_{s2} = 20mΩ	3
86.6			4
102			2
150	HPB		4
165			2
182			3
215		R_{s1}:R_{s2} = 2:1 R_{s1} = 10mΩ R_{s2} = 5mΩ or R_{s1} = 20mΩ R_{s2} = 10mΩ	4
237			2
255			3

Before soft-start and when V_{DD} voltage reaches its POR value, the ISL95521B sources 10µA current out of the PROG pin and reads the PROG pin voltage to determine the resistor value. However, application environmental noise may pollute the PROG pin voltage and cause an incorrect reading. If noise is a concern, it is recommended to connect a capacitor from the PROG pin to GND to provide filtering. The resistor and the capacitor RC time constant should be less than 40µs, so the PROG pin voltage can rise to steady state before the ISL95521B reads it.

The ISL95521B can be programmed in two different battery charger configurations.

Figure 1 on page 2 shows the typical application circuit for an HPB charger. In this configuration, the ISL95521B connects the system voltage rail to either the adapter or the battery. In Turbo mode, which means the system is drawing more power than the adapter's power rating, the ISL95521B operates as a boost converter to reverse-boost the battery energy to the system voltage rail, so the battery works with the adapter to supply the system power.

Figure 6 on page 8 shows the typical application circuit for the NVDC charger. In this configuration, the ISL95521B connects the system voltage rail to either the output of the buck switcher or the battery. In Turbo event, the ISL95521B turns on the BGATE to discharge the battery so the battery works with the adapter together to supply the system power.

The PROG pin resistor programs the ratio of the current sensing resistor values R_{s1} and R_{s2} as 2:1 or 1:1. Therefore, four sets of R_{s1} and R_{s2} current sensing resistor values can be used, for example:

- R_{s1} = 10mΩ, R_{s2} = 5mΩ
- R_{s1} = 10mΩ, R_{s2} = 10mΩ
- R_{s1} = 20mΩ, R_{s2} = 10mΩ
- R_{s1} = 20mΩ, R_{s2} = 20mΩ

If 20mΩ R_{s1} is used, the SMBus Information2 register Bit<0> and Bit<8> both need to be set as 1 for the appropriate internal current sensing scaling.

Smaller current sense resistor values reduce power loss while larger current sense resistor values give better accuracy.

The PROG pin resistor configures the internal current sense gain automatically for different R_{s1} and R_{s2}, such that the SMBus command remains the same for 20mΩ or 10mΩ R_{s1} and for 10mΩ or 5mΩ R_{s2}. For example, the AdapterCurrentLimit1 register, AdapterCurrentLimit2 register, and the ACPROCHOT register can be programmed with the same SMBus command value, regardless of whether R_{s1} is 20mΩ or 10mΩ, to obtain the same current. The ChargeCurrent register and DCPROCHOT register can be programmed with the same SMBus command value, regardless of whether R_{s2} is 10mΩ or 5mΩ, to obtain the same current. Using any option would result in 1mA/LSB correlation in the SMBus commands.

If R_{s1} and R_{s2} values are different from the PROG pin programming table, the SMBus command needs to be scaled accordingly to obtain the correct current.

Upon POR, the ISL95521B uses the default number of cells in series as Table 17 shows and sets the default MaxChargeVoltage register value and default MinChargeVoltage register value accordingly. When SMBus communication is established, the SMBus can program a different number of battery cells in series through SMBus Control1 register Bit<14:13>.

Tables 18 shows the adapter current and battery current related settings according to different R_{s1} and R_{s2} options.

Table 18. Current Sensing Resistor Configurations

Current Sensing Resistors		Registers			K_{PSYS} (µA/W)	
		ChargeCurrent	DCPROCHOT	AdapterCurrentLimit1* AdapterCurrentLimit2* ACPROCHOT**	Control2 Bit<9> = 0	Control2 Bit<9> = 1
1	R_{s1} = 10mΩ R_{s2} = 5mΩ	Bit<12:5> Max = 1FE0h, 8.160A Min = 0020h, 32mA Default = 0000h, 0A	Bit<13:8> Max = 3F00h, 16.128A Min = 0100h, 256mA Default = 2000h, 8.192A	Bit<12:7> Max = 1F80h, 8.064A Min = 0080h, 128mA *Default = 1F80h, 8.064A **Default = 1800h, 6.144A	1.14	0.285
2	R_{s1} = 10mΩ R_{s2} = 10mΩ	Bit<12:5> Max = 1FE0h, 8.160A Min = 0020h, 32mA Default = 0000h, 0A	Bit<12:7> Max = 1F80h, 8.064A Min = 0080h, 128mA Default = 1000h, 4.096A	Bit<12:7> Max = 1F80h, 8.064A Min = 0080h, 128mA *Default = 1F80h, 8.064A **Default = 1800h, 6.144A	1.14	0.285
3	R_{s1} = 20mΩ R_{s2} = 10mΩ	Bit<11:4> Max = 0FF0, 4.080A Min = 0010, 16mA Default = 0000h, 0A	Bit<12:7> Max = 1F80h, 8.064A Min = 0080h, 128mA Default = 1000h, 4.096A	Bit<11:6> Max = 0FC0h, 4.032A Min = 0040h, 64mA *Default = 0FC0h, 4.032A **Default = 0C00h, 3.072A	2.28	0.57
4	R_{s1} = 20mΩ R_{s2} = 20mΩ	Bit<11:4> Max = 0FF0, 4.080A Min = 0010, 16mA Default = 0000h, 0A	Bit<11:6> Max = 0FC0h, 4.032A Min = 0040h, 64mA Default = 0800h, 2.048A	Bit<11:6> Max = 0FC0h, 4.032A Min = 0040h, 64mA *Default = 0FC0h, 4.032A **Default = 0C00h, 3.072A	2.28	0.57

6.3 Programming Switching Frequency

The resistor from the FSET pin to GND programs the default CCM switching frequency, as shown in Table 19. Before soft-start, the ISL95521B sources 10µA current out of the FSET pin and reads the FSET pin voltage to determine the resistor value. However, application environmental noise can pollute the FSET pin voltage and cause incorrect reading. If noise is a concern, Renesas recommends connecting a capacitor from the FSET pin to GND to provide filtering. The resistor and the capacitor RC time constant should be less than 40µs, so the FSET pin voltage can rise to steady state before the ISL95521B reads it.

Table 19. Default CCM Switching Frequency Options

FSET-GND Resistance (kΩ)	Switching Frequency (kHz)	
Typ (1% Standard Resistor)	Typ (±15%)	4-Cell with Period Stretch
0	992	500
22.6	838	430
38.3	729	375
54.9	642	335
69.8	678	460
86.6	614	420
102	561	390
118	517	360
133	513	420
150	477	390
165	449	370
182	421	350
200	417	360
215	395	340
237	375	330
255	350	310

In DE mode, the ISL95521B employs a phase comparator to monitor the PHASE node voltage during low-side switching FET on-time to detect the inductor current zero crossing. The phase comparator needs a minimum on-time of the low-side switching FET for it to recognize inductor current zero crossing. If the low-side switching FET on-time is too short for the phase comparator to successfully recognize the inductor zero crossing, the ISL95521B can lose diode emulation ability. To prevent such a scenario, the ISL95521B employs a minimum low-side switching FET on-time. When the intended low-side switching FET on-time is shorter than the minimum value, the ISL95521B stretches the switching period to keep the low-side switching FET on-time at the minimum value, which causes the CCM switching frequency to drop below the set point. This effect is pronounced only in applications using a 4-cell battery and high switching frequency setting.

The switching frequency can be changed through SMBus Control2 register Bit<3:0> after POR. See the SMBus Control2 register programming table for detailed description.

6.4 Soft-Start

When the DCIN pin voltage is higher than 5V, an internal LDO starts to regulate and outputs 5V on the VDDP pin, which is the power supply for the gate drives.

The VDD pin is the 5V power supply for the ISL95521B control circuitry. An R-C filter is recommended to generate the VDD pin voltage from the VDDP pin voltage. When the VDD pin voltage exceeds its POR, the ISL95521B sources 10µA current out of the PROG pin and reads the pin voltage to determine the PROG resistor

value; it then sources 10µA current out of the FSET pin and reads the pin voltage to determine the FSET resistor value. The PROG resistor and the FSET resistor values program the configurations of the ISL95521B.

Soft-start begins when the VDD pin voltage exceeds its POR, the ACIN pin voltage exceeds 2V, DCIN pin voltage is higher than the VBAT pin voltage, and after the 163ms delay.

Note: After the adapter is plugged in, the ASGATE turn-on delay is always 163ms, regardless of the Control2 register Bit<5> setting. Control2 register Bit<5> only sets the ASGATE turn-on delay during restart in a fault condition.

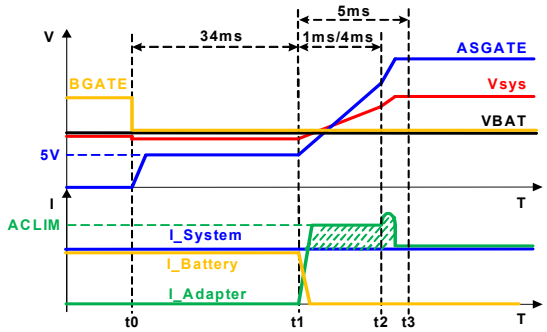

Figure 39. Soft-Start with V_{BAT} < 4.5V or V_{BAT} > 7V

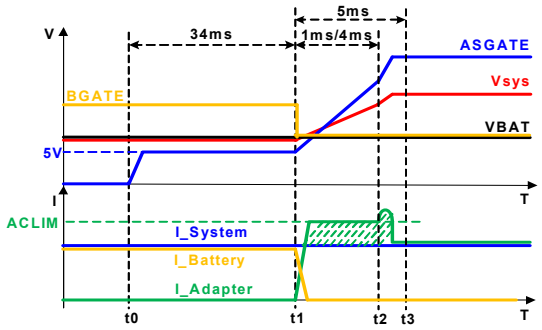

Figure 40. Soft-Start with 4.5V < V_{BAT} <7V

In both the HPB charger and the NVDC charger configurations, during soft-start, the ISL95521B limits the adapter current in several steps. See Figure 39, at t0, the ISL95521B outputs 20µA current source to charge the ASGATE pin voltage to 5V and then holds the ASGATE pin voltage at 5V for 34ms until t1. From t1 to t2, the ISL95521B limits the adapter current at the value set by the ACLIM pin voltage for the next 1ms (default, 4ms option is available through SMBus Control2 register Bit<10>). From t2 to t3, the ISL95521B outputs 20µA for another 4ms (or 1ms) to fully turn on ASGATE without actively limiting the adapter current. ACOK is asserted high after the ASGATE is fully turned on. The stepped soft-start scheme carefully bias up the system and protects the back-to-back ASGATE FETs against potential damage caused by the inrush current.

Figure 41 shows the HPB configuration without battery soft-start waveform when the system load is less than the ACLIM-set current level. During t1 through t2, the ISL95521B charges the system bus capacitor with (ACLIM - system load) current and reaches the adapter voltage by t2. There is no inrush current after t2.

Figure 42 shows the HPB configuration without battery soft-start waveform when the system load is greater than the ACLIM-set current level, which is not a recommended mode of operation. During t2 through t3, the ISL95521B fully turns on the ASGATE and lets the adapter charge the system bus capacitor without current limit.

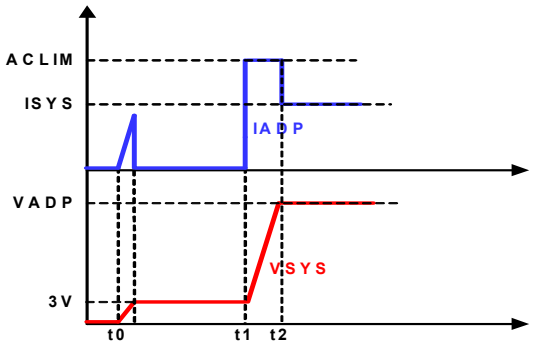

Figure 41. No Battery Soft-Start with I_{SYS} < ACLIM

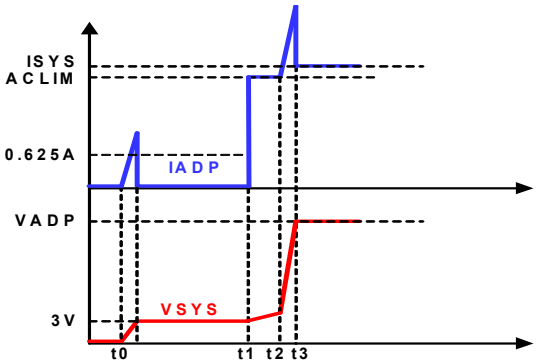

Figure 42. No Battery Soft-Start with I_{SYS} > ACLIM

In the HPB charger configuration, the ISL95521B can determine when to turn off the BGATE MOSFET to prevent system voltage disturbance. BGATE MOSFET turns off at t0 before ASGATE ramps up if V_{BAT} <4.5V or V_{BAT} >7V as shown in Figure 39 and remains on until t2 if 4.5V <V_{BAT} <7V as shown in Figure 40. Such a scheme

prevents the system bus voltage from dropping by MOSFET body-diode voltage drop caused by BGATE MOSFET turning off early. This should not pose any danger to the battery. However, if this scheme is not desired, Control2 register Bit<11> can turn off BGATE before ASGATE ramps up regardless of the battery voltage.

In the NVDC charger configuration, after fully turning on ASGATE, the ISL95521B starts the switcher. If V_{BAT} >3.5V, the BGATE MOSFET remains on for about 28ms after the buck regulator starts switching to prevent the system bus from dropping by a MOSFET body-diode voltage drop caused by the BGATE MOSFET turning off early. This 28ms switching is called precharging switching. During the 28ms, the current that flows into the battery is controlled at 256mA or 128mA based on the current sensing resistor configuration (see Table 19 on page 50). If V_{BAT} <3.5V, the BGATE MOSFET does not turn on to avoid charging the depleted battery with a large current. ACOK signal is asserted high after the precharging switching period.

6.5 Adapter Presence Detection and ACOK

ACOK is an open-drain output pin indicating the presence of the adapter and readiness of the adapter to supply power to the system bus. The ISL95521B actively pulls ACOK low in the absence of the adapter.

Use a voltage divider from the adapter voltage to set the ACIN pin voltage. The ISL95521B monitors the ACIN pin voltage to determine the presence of the adapter. When the ACIN pin voltage exceeds 2V, the DCIN pin voltage is higher than the VBAT pin voltage and ASGATE is fully turned on, the ISL95521B allows the external circuit to pull up the ACOK pin. For the NVDC configuration, the ISL95521B allows the external circuit to pull up the ACOK pin after the precharging switching period.

For the buck converter to work properly to charge the battery, the ACIN pin voltage divider should be selected such that the minimum adapter voltage set by the ACIN pin voltage divider is higher than the maximum battery voltage. There is a delay between the ACIN pin voltage rising above 2V and ASGATE starting to turn on. The delay is 163ms.

Depending on different operation scenarios, the total deglitch time from the ACIN pin voltage rising above 2V to ACOK asserted high varies. For HPB configuration, this deglitch time is about 278ms with the PROG pin resistor reading and about 247ms without the PROG pin resistor reading. For the NVDC configuration, this deglitch time is about 338ms with the PROG pin resistor reading and about 307ms without the PROG pin resistor reading. These typical numbers can have an 11% variation.

6.6 Adapter Overvoltage Protection

If the ACIN voltage exceeds 3.5V, the ISL95521B considers an adapter overvoltage condition has occurred. It turns off the ASGATE MOSFETs to isolate the adapter from the system and deasserts the ACOK signal by pulling it low.

When the ACIN voltage drops below 3.5V, after the 1.3s or 163ms debounce time set by Control2 register Bit<5>, it goes through the ASGATE soft-start to turn on ASGATE.

The adapter OVP function can be disabled through the SMBus Control2 register Bit<8>.

6.7 Power Source Selection

The ISL95521B automatically selects the adapter and/or the battery as the source for system power.

The BGATE pin drives an NFET that connects/disconnects the battery from the system and the switcher.

The ASGATE pin drives a pair of back-to-back common-source NFETs to connect/disconnect the adapter from the system and the battery.

If the adapter is present, the ISL95521B turns on ASGATE to connect the adapter to the system. In the HPB charger configuration, it also turns off BGATE to disconnect the battery from the system when it turns on ASGATE.

If the adapter is absent, the ISL95521B turns off ASGATE and turns on BGATE to connect the battery to the system. If system bus voltage is higher than the battery voltage, the ISL95521B waits until the system bus voltage decays to battery voltage before turning on BGATE to avoid inrush current into the battery.

6.8 Battery Learn Mode

The ISL95521B supports Battery Learn mode. The ISL95521B enters Battery Learn mode when it receives the SMBus Control command (see Table 13 on page 40), or when the PROG pin voltage is externally pulled to 5V after POR. It is not possible to pull up the PROG pin to 5V if the PROG pin to GND resistor value is chosen to be 0Ω. The ISL95521B exits Battery Learn mode when it receives the SMBus control command as Table 13 shows, or when the PROG pin voltage is no longer pulled to 5V.

6.9 HPB Charger Battery Learn Mode Entry/Exit

In the HPB charger configuration Battery Learn mode, the ISL95521B turns off ASGATE and turns on BGATE regardless of whether the adapter is present or not. This mode of operation is used when needed to supply the system power from the battery, even when the adapter is plugged in, such as calibration of the battery fuel gauge, hence the name “Battery Learn mode”. The Information1 register Bit<1> indicates ASGATE on or off.

Upon entering Battery Learn mode, the ISL95521B only turns on BGATE when the system bus voltage decays to battery voltage to avoid inrush current from system bus to battery.

There are three ways of exiting HPB charger configuration Battery Learn mode:

- Receive Battery Learn Mode Exit command through SMBus.
- The PROG pin voltage drops below 5V.
- BATGONE pin voltage goes from logic LOW to HIGH.

In the first two cases, after the ASGATE turn-on delay of 163ms, the ISL95521B goes through the soft-start process to turn on ASGATE and turn off BGATE as described in “Soft-Start” on page 50.

In the last case, the ISL95521B uses its maximum gate drive strength to turn on ASGATE quickly to prevent system voltage collapse. This action can be completed within ~35µs after the BATGONE pin voltage level goes to logic high. If the soft-start process is still preferred in this case, use SMBus Control1 register Bit<7> to configure the preference.

6.10 NVDC Charger Battery Learn Mode Entry/Exit

In the NVDC charger configuration Battery Learn mode, the ISL95521B turns on BGATE, keeps ASGATE on but turns off the switcher regardless of whether the adapter is present or not.

Upon entering Battery Learn mode, the ISL95521B only turns on BGATE when the system bus voltage decays to battery voltage to avoid inrush current from system bus to battery.

The three ways of exiting the NVDC charger configuration Battery Learn mode are the same as for HPB charger configuration Battery Learn mode listed as follows:

- Receive Battery Learn Mode Exit command through SMBus.
- The PROG pin voltage drops below 5V.
- BATGONE pin voltage goes from logic LOW to HIGH.

In all these cases, the ISL95521B resumes switching immediately to supply power to the system bus from the adapter to prevent system voltage collapse.

6.11 Hardware-Based Adapter Current Limit

The ACLIM pin voltage set hardware-based adapter current limit provides an extra level of protection in the unlikely event of an SMBus communication failure.

Equation 1 gives the relationship between the ACLIM pin voltage and the hardware-based adapter current limit, where $V_{ACLIMHW}$ is the ACLIM pin voltage in volts and $I_{ACLIMHW}$ is the hardware-based adapter current limit in amperes.

$$I_{ACLIMHW} = \frac{V_{ACLIMHW}}{32 \times Rs1} \quad \text{(EQ. 1)}$$

Equation 1 is true for all current sensing resistor configurations.

The ISL95521B uses the lower value of the hardware-set adapter current limit and the SMBus programmed adapter current limit as the actual adapter current limit.

The ACLIM pin voltage also sets the ASGATE soft-start current limit level from t2 to t3. The ACLIM current limit function can be disabled through SMBus Control2 register Bit<13> after ACOK assertion, such that the ACLIM pin is only used for ASGATE soft-start current limit from t2 to t3 as shown in "Soft-Start" on page 50.

6.12 HPB Charger Turbo Mode Support

Turbo mode refers to the scenario when the system draws more power than the adapter's power rating. It prompts the need for the switcher to change from Forward Buck mode of operation to Reverse-Boost mode of operation to reverse the energy flow. Such mode of operation enables the battery to help the adapter provide the required system power. This type of operation has been widely used in many systems, such as "Sun mode" and "Eclipse mode" for bidirectional battery charger/discharger used on satellites with solar panels as the power source acting as the adapter (reference "A zero voltage switching bidirectional battery charger/discharger for the NASA EOS Satellite", Dan M. Sable, Fred C.Lee and Bo H. Cho, APEC 1992 Conference Proceedings).

In the HPB charger configuration, the ISL95521B normally operates the switcher as a synchronous buck converter with diode emulation. When the buck converter is in light-load condition, it enters DCM operation with reduced switching frequency to increase efficiency. From the description of the R3 modulator operational principle, the COMP pin voltage is lower at lighter load and can reach the low clamp.

In Turbo mode, the ISL95521B operates the switcher in Reverse-Boost mode to boost energy from the battery to the adapter voltage rail, so the adapter current is limited at the adapter current limit set point while the battery supplies the additional power required by the system.

The Control1 register Bit<10> enables/disables the Turbo/Boost function. See Table 13 for details.

The ISL95521B enters Turbo mode when all of the following criteria are met:

- Adapter current is within 80mA of AdapterCurrentLimit1 (or AdapterCurrentLimit2 if two-level adapter current limit function is enabled) register setting.
- Battery charging current is less than 150mA.
- COMP pin voltage is lower than 1.4V.

Meeting these three criteria means that the ISL95521B only enters Turbo mode precisely when it is absolutely necessary. For example, assuming the adapter voltage is 20V, the adapter current limit is 4A (80W rating) and the ISL95521B is charging an 8V battery at a 5A rate (40W charging power). If the system load increases from 0W to 79W instantaneously, the adapter current increases from 2A to 5.95A instantaneously, exceeding the 4A current limit level. However, the adapter current loop takes control and decreases the charging current to limit the adapter current at 4A, eventually providing 79W of system power and 1W of battery charging power. In this case, the ISL95521B does not need to enter Turbo mode for the adapter to conserve battery energy. In the same example, if the system load increases from 0W to 81W instantaneously, the adapter current increases from 2A to 6.05A instantaneously, exceeding the 4A current limit level. The adapter current loop takes control and decreases the charging current to limit the adapter current at 4A. Thus, the ISL95521B eventually determines that it needs to enter Turbo mode so the adapter provides 80W and the battery provides 1W, to provide 81W to the system.

The interaction of the control loops within the ISL95521B, including the adapter current loop, the charging current loop, and the battery full charging voltage loop, determines the timing of the Turbo mode entry. The timing strongly depends on the control loop compensation design and the interaction among the loops. In the previous example, compared with system power instantaneously increasing from 0W to 81W, system power instantaneously increasing from 0W to 160W causes the ISL95521B to enter Turbo mode much faster because the loops drive the circuit parameters to meet the three Turbo mode entry criteria much quicker when the adapter is more severely overloaded.

The ISL95521B exits Turbo mode when one of the following three criteria are met:

• Battery charging current exceeds 150mA (R_{s2} = 10mΩ).

• Adapter current is less than AdapterCurrentLimit register setting and COMP voltage is lower than 1.4V.

• Battery discharging current is less than 140mA (for R_{s2} = 10mΩ) for 140ms.

Table 20 shows the ISL95521B HPB configuration charge function and Turbo/Boost function control truth table.

Table 20. HPB Charger Behavior Truth Table

Turbo/Boost Mode Control Bit	EnableCharging Control Bit	ChargeCurrent Register		
0 = Enable Boost 1 = Disable Boost	0 = Disable Charging 1 = Enable Charging	0 = 0A Command 1 = Non-Zero Valid Command	Charge?	Boost?
0	0	0	No	Yes
0	0	1	No	Yes
0	1	0	No	Yes
0	1	1	Yes (Fast charge and trickle charge enabled)	Yes
1	0	0	No	No
1	0	1	No	No
1	1	0	No	No
1	1	1	Yes (Fast charge and trickle charge enabled)	No

6.13 NVDC Charger Turbo Mode Support

In the NVDC charger configuration and Turbo mode, the ISL95521B turns on the BGATE FET to limit the adapter current at the adapter current limit set point, while the battery supplies the rest of the power required by the system. To turn on BGATE in Turbo mode, the CSON pin voltage needs to be 175mV lower than the VBAT pin voltage. If the ISL95521B detects 150mA charging current or if the battery discharging current is less than 140mA for 140ms, it turns off BGATE to exit Turbo mode. See Table 21 for BGATE operation.

Table 21. NVDC Charger Behavior Truth Table

Turbo/Boost Mode Control Bit	EnableCharging Control Bit	ChargeCurrent Register	BGATE On/off	
0 = Enable Turbo 1 = Disable Turbo	0 = Disable Charging 1 = Enable Charging	0 = 0A Command 1 = Non-Zero Valid Command	System Load Not In Turbo Mode Range	System Load In Turbo Mode Range
0	0	0	Off	On
0	0	1	Off	On
0	1	0	Off	On
0	1	1	On for fast charge; trickle charge enabled	On
1	0	0	Off	Off
1	0	1	Off	Off
1	1	0	Off	Off
1	1	1	On for fast charge; trickle charge enabled	On

6.14 Two-Level Adapter Current Limit

In a real system Turbo event usually does not last very long. It is often no longer than milliseconds, a time length during which the adapter can supply current higher than its DC rating. The ISL95521B employs two-level adapter current limit to take full advantage of adapter's surge capability and minimize the power draw from the battery.

Figure 43 shows the two SMBus-programmable adapter current limit levels, AdapterCurrentLimit1 and AdapterCurrentLimit2, as well as the durations t1 and t2. The two-level adapter current limit function is initiated when the adapter current reaches the AdapterCurrentLimit1 register setting and it starts at AdapterCurrentLimit2 for t2 duration and then changes to AdapterCurrentLimit1 for t1 duration before repeating the pattern. These parameters can set adapter current limit with an envelope that allows the adapter to temporarily output surge current without requiring the charger to enter Turbo mode. Such operation maximizes battery life.

AdapterCurrentLimit1 register value can be higher or lower than AdapterCurrentLimit2 value.

The two-level adapter current limit function can be enabled and disabled through SMBus Control2 register Bit<6>. When the two-level adapter current limit function is disabled, only AdapterCurrentLimit1 value is used as the adapter current limit and AdapterCurrentLimit2 value is ignored.

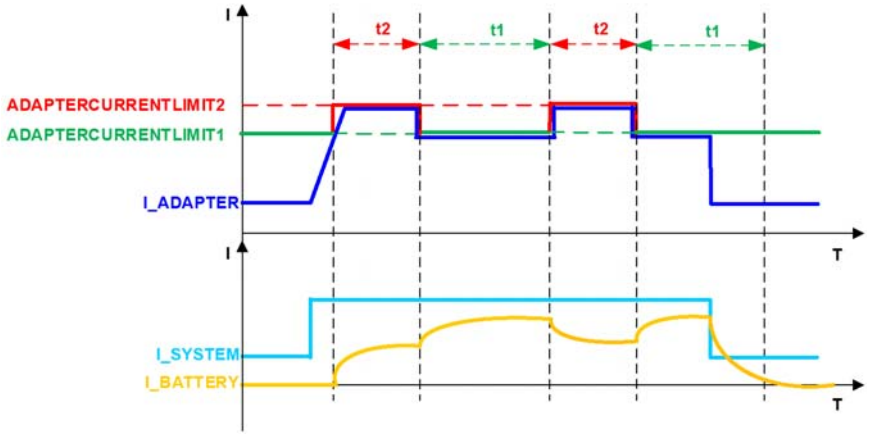

Figure 43. Two-Level Adapter Current Limit

6.15 Current Monitor

The ISL95521B provides an adapter current monitor through the AMON pin and a battery discharging current monitor through the BMON pin. The AMON pin voltage is 32x the (V_{CSIP}-V_{CSIN}) voltage and the BMON pin voltage is 32x the (V_{CSON}-V_{CSOP}) voltage.

AMON and BMON function can be enabled or disabled through SMBus Control1 register Bit<2> and Bit<3> respectively, as Table 13 on page 40 shows.

6.16 PSYS Monitor

The ISL95521B PSYS pin provides a measure of the instantaneous power consumption of the entire platform. The PSYS pin outputs a current source described by Equation 2.

$$I_{PSYS} = K_{PSYS} \times (V_{ADP} \times I_{ADP} + V_{BAT} \times I_{BAT}) \quad \text{(EQ. 2)}$$

K_{PSYS} is based on the current sensing resistors R_{s1} and R_{s2} configuration and is selectable through SMBus Control2 register Bit<9>. See Table 18 for details. V_{ADP} is the adapter voltage in volts, I_{ADP} is the adapter current in amperes, V_{BAT} is the battery voltage and I_{BAT} is the battery discharging current. When the battery is discharging, I_{BAT} is a positive value; when the battery is being charged, I_{BAT} is a negative value. The battery voltage V_{BAT} is detected through the CSON pin to maximize the power monitor accuracy in NVDC configuration Trickle Charge mode.

The PSYS information includes the power loss of the charger circuit and the actual power delivered to the system. Resistor R_{PSYS} connected between the PSYS pin and GND, convert the PSYS information from current to voltage.

The PSYS function can be enabled or disabled through SMBus Control1 register Bit<4> as shown in Table 13.

6.17 Charger Timeout

The ISL95521B includes a timer to ensure the SMBus master is active and to prevent overcharging the battery. The ISL95521B terminates charging if the charger has not received a write to the MaxChargeVoltage or ChargeCurrent register within 175s. If a time-out occurs, the MaxChargeVoltage or ChargeCurrent register must be written to re-enable charging.

The ISL95521B allows users to disable the charger timeout function through SMBus Control1 register Bit<15> as Table 13 shows.

6.18 Trickle Charging

The ISL95521B supports trickle charge to an overly discharged battery. It can activate the trickle charge function when the battery voltage is lower than MinChargeVoltage setting. The VBAT pin is the battery voltage sense point for Trickle Charge mode.

To enable trickle charge, set EnableCharging control bit to ‘1’ and set ChargeCurrent register to a valid non-zero value. To disable trickle charge, either set EnableCharging control bit to ‘0’ or set ChargeCurrent register to ‘0’. Table 20 on page 55 shows the condition to enable HPB configuration Trickle Charge mode. Table 21 shows the condition to enable the NVDC configuration Trickle Charge mode.

The trickle charging current can be programmed to be 256mA, 128mA, or 64mA through SMBus Control2 register Bit<7> and Bit<12> as shown in Table 14 on page 42.

In the HPB charger configuration, the ISL95521B charges the battery at 256mA, 128mA, or 64mA in Trickle Charge mode.

In the NVDC charger configuration Trickle Charge mode, the ISL95521B regulates the system voltage at 450mV above the MinChargeVoltage register value. An independent control loop regulates BGATE FET gate voltage to regulate the battery charging current at 256mA, 128mA, or 64mA.

When the battery voltage is charged to 175mV above MinChargeVoltage register value, the ISL95521B enters Fast Charging mode by limiting the charging current at the ChargeCurrentLimit register setting.

The ISL95521B CSON pin sinks about 20µA current and the CSOP pin sinks about 35µA current to provide the bias power for the battery current sensing amplifier. If there is a resistor series in CSON pin, the voltage drop on this resistor creates a small offset such that the actual battery charging current becomes slightly smaller. If there is a resistor series in CSOP pin, the voltage drop on this resistor creates a small offset such that the actual battery charging current becomes slightly larger. These two resistors can slightly tweak the actual battery charging current.

6.19 NVDC Charger System Voltage Regulation

If the battery is absent, the ISL95521B regulates the system bus voltage at the higher value of 7.168V and the MinChargeVoltage register setting.

If the battery is present but BGATE is turned off, the ISL95521B regulates the system bus voltage at the higher value of 7.168V and the MaxChargeVoltage register setting.

The CSON pin senses the system bus voltage.

When the battery is absent, to not collapse the system voltage the ISL95521B does not limit the adapter current if the system power draw causes the adapter current to exceed the adapter current limit. This function can be enabled or disabled through SMBus Control2 register Bit<4>.

6.20 Charging Current WOCP

The ISL95521B provides the WOCP (Way-Overcurrent Protection) function for the current flowing into to the battery against the high-side MOSFET short and inductor short scenarios. It employs the CCLIM pin to set the WOCP threshold. ISL95521B monitors the CSOP-CSON voltage and compares it with the WOCP threshold. When the WOC comparator is tripped, it either terminates the PWM switching pulse, or turns off ASGATE and deassert ACOK, configurable through SMBus Control1 register Bit<11>.

When the WOCP function is enabled through Control1 register Bit<11>, if the WOC comparator is tripped, ISL95521B counts once within every 20µs. Whenever ISL95521B counts to seven times in 656ms, it turns off ASGATE and deassert ACOK immediately. After the 1.3s or 163ms debounce time set by Control2 register Bit<5>, it goes through the ASGATE soft-start to retry.

When the WOCP function is disabled through Control1 register Bit<11>, as long as the WOC comparator is tripped within every 20µs, it terminates the PWM switching pulse immediately for the rest of the time of the 20µs.

The CCLIM pin voltage sets the charging current WOCP threshold. Equations 3 and 4 give the relationship between the CCLIM pin voltage and the WOCP threshold, where $V_{CCLIMHW}$ is the CCLIM pin voltage in volts and I_{WOCP} is the WOCP threshold in amperes.

$$I_{WOCP} = 1.23 \times \frac{V_{CCLIMHW}}{64 \times R_{s2}} \quad \text{(EQ. 3)}$$

Equation 3 is true for R_{s1}: R_{s2} = 2:1 (R_{s1} = 10mΩ and R_{s2} = 5mΩ or R_{s1} = 20mΩ and R_{s2} = 10mΩ).

$$I_{WOCP} = \frac{V_{CCLIMHW}}{32 \times R_{s2}} \quad \text{(EQ. 4)}$$

Equation 4 is true for R_{s1}: R_{s2} = 1:1 (R_{s1} = 10mΩ and R_{s2} = 10mΩ or R_{s1} = 20mΩ and R_{s2} = 20mΩ).

The WOC comparator monitors the peak current crossing the battery current sensing resistor R_{s2}, so the WOCP threshold needs to be set at least half of the inductor ripple current higher than the SMBus-programmed charging current command to avoid false tripping in normal charging.

For the WOCP function to work properly, it needs to connect an RC filter from the CSON pin to ground to increase the overcurrent detection sensitivity. This RC filter time constant should be selected carefully and cannot be too large, otherwise the WOCP could be falsely tripped by the current overshoot flowing into the battery when ISL95521B exits Turbo mode after system bus load release. Meanwhile, the WOCP threshold should be set high enough to avoid the false trip by the current overshoot flowing into the battery.

The current spike flowing into the battery could cause a voltage spike at the battery connector due to the battery current path impedance. For the NVDC charger, one should pay attention to this voltage spike at the VBAT pin so as not to trip the battery 4.6V/cell OVP function, otherwise the BGATE FET turns off due to the battery OVP such that the current flowing on R_{s2} is gone. Adding an RC filter at VBAT in this scenario is recommended.

6.21 Over-Temperature Protection

The ISL95521B turns off the internal LDO for self-protection when the junction temperature exceeds +155°C. The internal LDO stays off until the junction temperature falls below +128°C.

In the HPB charger configuration, the ISL95521B puts the charger in Standby mode after declaring over-temperature protection.

In the NVDC charger configuration, the ISL95521B stops switching after declaring over-temperature protection.

When the temperature falls below +128°C, the ISL95521B enables the internal LDO and resumes operation.

6.22 Battery Overvoltage Protection

The battery overvoltage protection function prevents the battery from being overcharged.

In HPB charger configuration, the ISL95521B stops switching if battery voltage is higher than MaxChargeVoltage register setting. If the battery voltage is higher than 4.6V/cell, it stops charging.

In the NVDC charger configuration, the ISL95521B stops switching if the system bus voltage is higher than MaxChargeVoltage register value; if the battery voltage is higher than 4.6V/cell, it turns off BGATE to stop charging.

The MaxChargeVoltage register setting should be less than 4.6V/cell.

6.23 System Bus Short-Circuit Detection

If the ACIN pin is pulled below 2V by the system bus excessive current or short-circuit, ISL95521B turns off ASGATE to isolate the adapter from the system bus. When the ACIN pin voltage rises above 2V again and after 163ms delay, ASGATE turns on again with soft-start.

An external circuit, as shown in Figure 44, can detect the system bus short-circuit. If the system bus is short-circuit, the ACIN pin is pulled below 2V by diode D_1, so ASGATE cannot turn on. While in normal operation, ASGATE still can turn on when the system bus is charged up above 2V through D_1.

In normal operation, to charge up the system bus above 2V through D_1 quickly, the ACIN pin voltage divider resistor values need to be small, which in sequence causes a larger constant power consumption on the ACIN pin voltage divider resistors. Two optional circuits as shown in Figure 44 can be dedicated to charge up the system bus. It is recommended to use Option 1 circuit for HPB configuration and Option 2 circuit for NVDC configuration.

For the Option 2 circuit, the R_3 and R_4 voltage divider voltage, for example, the Q_1 gate voltage, needs to be 2V higher than the Q_1 gate source threshold voltage, such that Q_1 can be turned on and the system bus can be charged up above 2V through R_2 and Q_1. Meanwhile, the R_3 and R_4 voltage divider voltage needs to be less than the final system bus voltage such that Q_1 can be turned off in normal operation to avoid the leakage current through Q_1. D_3 can block the leakage current from the system bus to the adapter side through the Q_1 body diode in Battery Only mode.

It should be noted that with the Option 1 circuit there is leakage current through R_1 and D_2 when the adapter voltage is higher than the system bus voltage such as in Learn mode or for NVDC configuration.

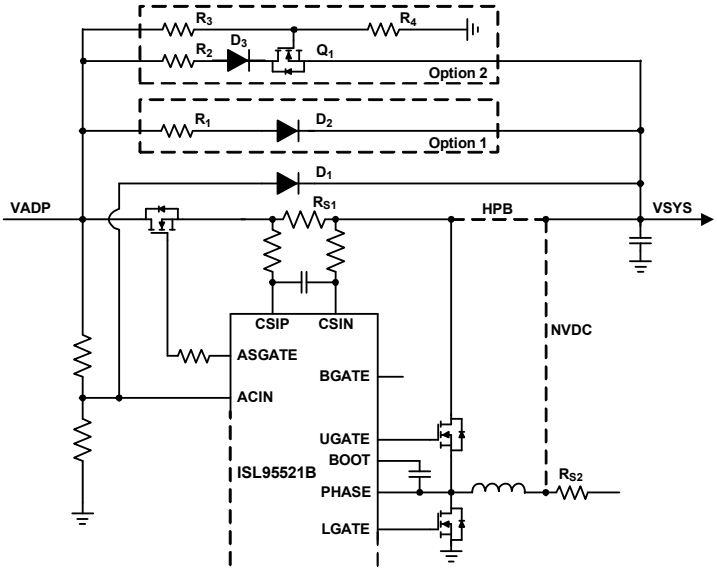

Figure 44. External System Bus Short Detection Circuit

6.24 Adapter Input Filter

The adapter cable parasitic inductance and capacitance could cause some voltage ring or overshoot spike at the adapter connector node when the adapter is hot plugged in. This voltage spike could damage the ASGATE MOSFET or the ISL95521B pins connecting to the adapter connector node. One low cost solution is to add an RC snubber circuit at the adapter connector node to clamp the voltage spike as shown in Figure 45. A practical value of the RC snubber is 2.2Ω to 2.2µF while the appropriate values and power rating should be carefully characterized based on the actual design. Meanwhile, it is not recommended to add a pure capacitor at the adapter connector node, which can cause an even bigger voltage spike due to the adapter cable or the adapter current path parasitic inductance.

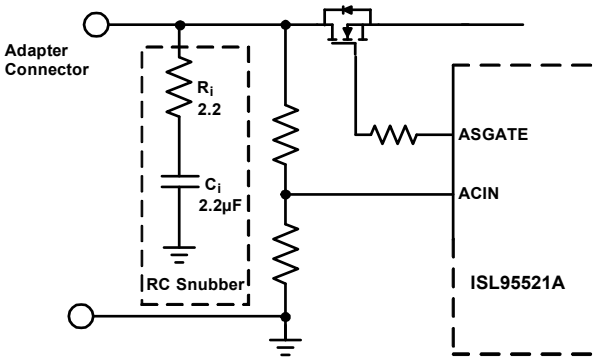

Figure 45. Adapter Input RC Snubber Circuit

6.25 Test with e-Load Constant Voltage Mode

An electronic load in Constant Voltage mode (e-Load in CV mode) often emulates a battery in testing a battery charger. However, an e-Load in CV mode does not accurately emulate the characteristics of a real battery, particularly the ESR. Such discrepancy can result in a much more exaggerated output voltage switching ripple observed by the battery charger and present inaccurate test results. It is recommended to add a capacitor, such as 680µF, at the terminal of the e-Load to better match the impedance of a real battery, such that the test result better represents that with a real battery. As a precaution for potentially testing with an e-load with large ESR, adding an R-C filter at the VBAT pin is recommended to smooth the switching ripple observed by the ISL95521B. The recommended range of the R-C time constant is 200µs to 1ms.

7. General Application Information

This design guide is intended to provide a high-level explanation of the steps necessary to design a single-phase power converter. It is assumed that the reader is familiar with many of the basic skills and techniques referenced in the following section. In addition to this guide, complete reference designs that include schematics, bill of materials, and example board layouts are provided.

7.1 Select the LC Output Filter

The duty cycle of an ideal buck converter in CCM is a function of the input and the output voltage. This relationship is written by Equation 5:

$$D = \frac{V_{OUT}}{V_{IN}} \quad \text{(EQ. 5)}$$

The output inductor peak-to-peak ripple current is written by Equation 6:

$$I_{P-P} = \frac{V_{OUT} \cdot (1 - D)}{f_{SW} \cdot L} \quad \text{(EQ. 6)}$$

A typical step-down DC/DC converter has an I_{P-P} of 20% to 40% of the maximum DC output load current for a practical design. The value of I_{P-P} is selected based upon several criteria such as MOSFET switching loss, inductor core loss and the resistive loss of the inductor winding.

The DC copper loss of the inductor can be estimated by Equation 7:

$$P_{COPPER} = I_{LOAD}^{2} \cdot DCR \quad \text{(EQ. 7)}$$

where I_{LOAD} is the converter output DC current.

The copper loss can be significant so attention has to be given to the DCR selection. Another factor to consider when choosing the inductor is its saturation characteristics at elevated temperatures. A saturated inductor could cause destruction of circuit components.

A DC/DC buck regulator must have output capacitance C_O into which ripple current I_{P-P} can flow. Current I_{P-P} develops a corresponding ripple voltage V_{P-P} across $C_{O,}$ which is the sum of the voltage drop across the capacitor ESR and of the voltage change stemming from charge moved in and out of the capacitor.

These two voltages are written by Equations 8 and 9:

$$\Delta V_{ESR} = I_{P-P} \cdot ESR \quad \text{(EQ. 8)}$$

$$\Delta V_C = \frac{I_{P-P}}{8 \cdot C_O \cdot f_{SW}} \quad \text{(EQ. 9)}$$

If the output of the converter has to support a load with high pulsating current, several capacitors need to be paralleled to reduce the total ESR until the required V_{P-P} is achieved. The inductance of the capacitor can cause a brief voltage dip if the load transient has an extremely high slew rate. Low inductance capacitors should be considered in this scenario. A capacitor dissipates heat as a function of RMS current and frequency. Be sure that I_{P-P} is shared by a sufficient quantity of paralleled capacitors so that they operate below the maximum rated RMS current at f_{SW}. Take into account that the rated value of a capacitor can fade as much as 50% as the DC voltage across it increases.

7.2 Select the Input Capacitor

The important parameters for the input capacitance are the voltage rating and the RMS current rating. For reliable operation, select capacitors with voltage and current ratings above the maximum input voltage and capable of supplying the RMS current required by the switching circuit. Their voltage rating should be at least 1.25x greater than the maximum input voltage, while a voltage rating of 1.5x is a preferred rating. Figure 46 on page 62 is a graph

of the input capacitor RMS ripple current, normalized relative to output load current, as a function of duty cycle and is adjusted for converter efficiency. The normalized RMS ripple current calculation is written as Equation 10:

$$I_{C_{IN}(RMS,NORMALIZED)} = \frac{I_{MAX} \cdot \sqrt{D \cdot (1 - D) + \frac{D \cdot k^2}{12}}}{I_{MAX}} \quad \text{(EQ. 10)}$$

where:

- I_{MAX} is the maximum continuous I_{LOAD} of the converter
- k is a multiplier (0 to 1) corresponding to the inductor peak-to-peak ripple amplitude expressed as a percentage of I_{MAX} (0% to 100%)
- D is the duty cycle that is adjusted to take into account the efficiency of the converter, which is written as Equation 11:

$$D = \frac{V_{OUT}}{V_{IN} \cdot EFF} \quad \text{(EQ. 11)}$$

In addition to the capacitance, some low ESL ceramic capacitance is recommended to decouple between the drain of the high-side MOSFET and the source of the low-side MOSFET.

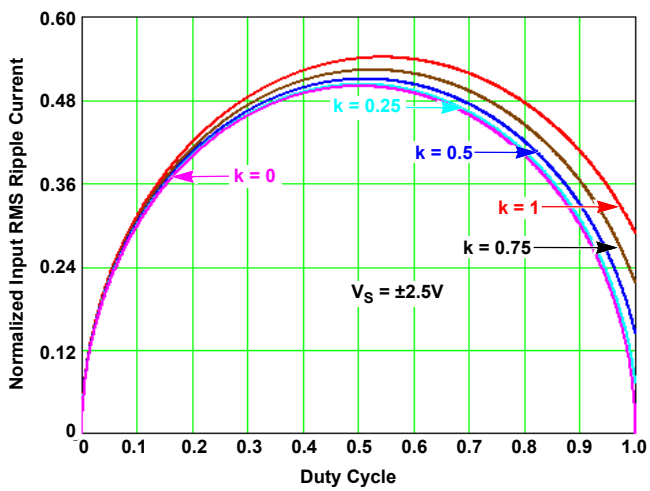

Figure 46. Normalized RMS Input Current at EFF = 1

7.3 Select the Switching Power MOSFET

Typically, a MOSFET cannot tolerate even brief excursions beyond their maximum drain-to-source voltage rating. The MOSFETs used in the power stage of the converter should have a maximum VDS rating that exceeds the sum of the upper voltage tolerance of the input power source and the voltage spike that occurs when the MOSFET switches off.

There are several power MOSFETs readily available that are optimized for DC/DC converter applications. The preferred high-side MOSFET emphasizes low gate charge so that the device spends the least amount of time dissipating power in the linear region. Unlike the low-side MOSFET, which has the drain-to-source voltage clamped by its body diode during turn off, the high-side MOSFET turns off with a VDS of approximately V_{IN}-V_{OUT}, plus the spike across it. The preferred low-side MOSFET emphasizes low $r_{DS(ON)}$ when fully saturated to minimize conduction loss. It should be noted that this is an optimal configuration of MOSFET selection for low duty cycle applications (D <50%). For higher output, low input voltage solutions, a more balanced MOSFET selection for high-side and low-side devices may be warranted.

For the Low-Side (LS) MOSFET, the power loss can be assumed to be conductive only and is written as Equation 12:

$$P_{CON_LS} \approx I_{LOAD}^{2} \cdot r_{DS(ON)_LS} \cdot (1 - D) \quad \text{(EQ. 12)}$$

For the High-Side (HS) MOSFET, conduction loss is written by Equation 13:

$$P_{CON_HS} = I_{LOAD}^{2} \cdot r_{DS(ON)_HS} \cdot D \quad \text{(EQ. 13)}$$

For the high-side MOSFET, the switching loss is written as Equation 14:

$$P_{SW_HS} = \frac{V_{IN} \cdot I_{VALLEY} \cdot t_{ON} \cdot f_{SW}}{2} + \frac{V_{IN} \cdot I_{PEAK} \cdot t_{OFF} \cdot f_{SW}}{2} \quad \text{(EQ. 14)}$$

where:

- I_{VALLEY} is the difference of the DC component of the inductor current minus 1/2 of the inductor ripple current
- I_{PEAK} is the sum of the DC component of the inductor current plus 1/2 of the inductor ripple current
- t_{ON} is the time required to drive the device into saturation
- t_{OFF} is the time required to drive the device into cut-off

Renesas recommends using a 2.2µF (10V) VDD/VDDP capacitor, which has an effective capacitance higher than 0.4µF at 5V and x1.6 effective capacitance at the BOOT pin at 5V.

7.4 Select the Bootstrap Capacitor

The selection of the bootstrap capacitor is written by Equation 15:

$$C_{BOOT} = \frac{Q_g}{\Delta V_{BOOT}} \quad \text{(EQ. 15)}$$

where:

- Q_g is the total gate charge required to turn on the high-side MOSFET
- ΔV_{BOOT}, is the maximum allowed voltage decay across the boot capacitor each time the high-side MOSFET is switched on

As an example, suppose the high-side MOSFET has a total gate charge Q_g, of 25nC at VGS = 5V and a ΔV_{BOOT} of 200mV. The calculated bootstrap capacitance is 0.125µF; for a comfortable margin, select a capacitor that is double the calculated capacitance. In this example, 0.22µF will suffice. Use an X7R or X5R ceramic capacitor.

Renesas recommends using a bootstrap capacitor of 0.47µF (25V), which has an effective capacitance higher than 0.25µF at 5V and x50 effective high-side MOSFET gate capacitance.

7.5 Select the DCIN Filter

An RC filter is connected at the DCIN pin. Renesas recommends connecting a 10Ω DCIN resistor between the DCIN pin and the VADP/VSYS diodes, and connecting a 4.7µF (50V) DCIN capacitor to GND, which has an effective capacitance higher than 0.4µF at 20V.

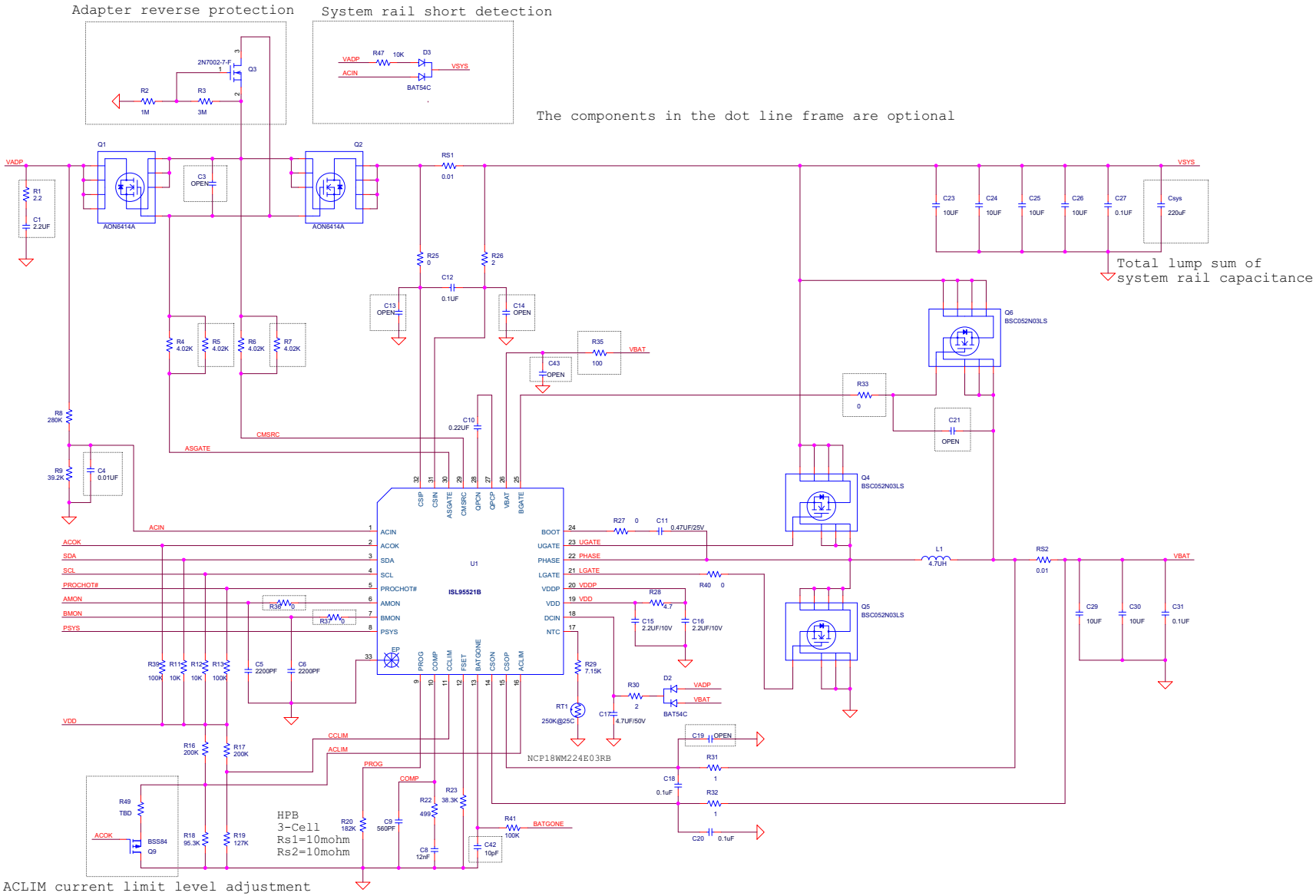

Figure 47. ISL95521B HPB Configuration Reference Design

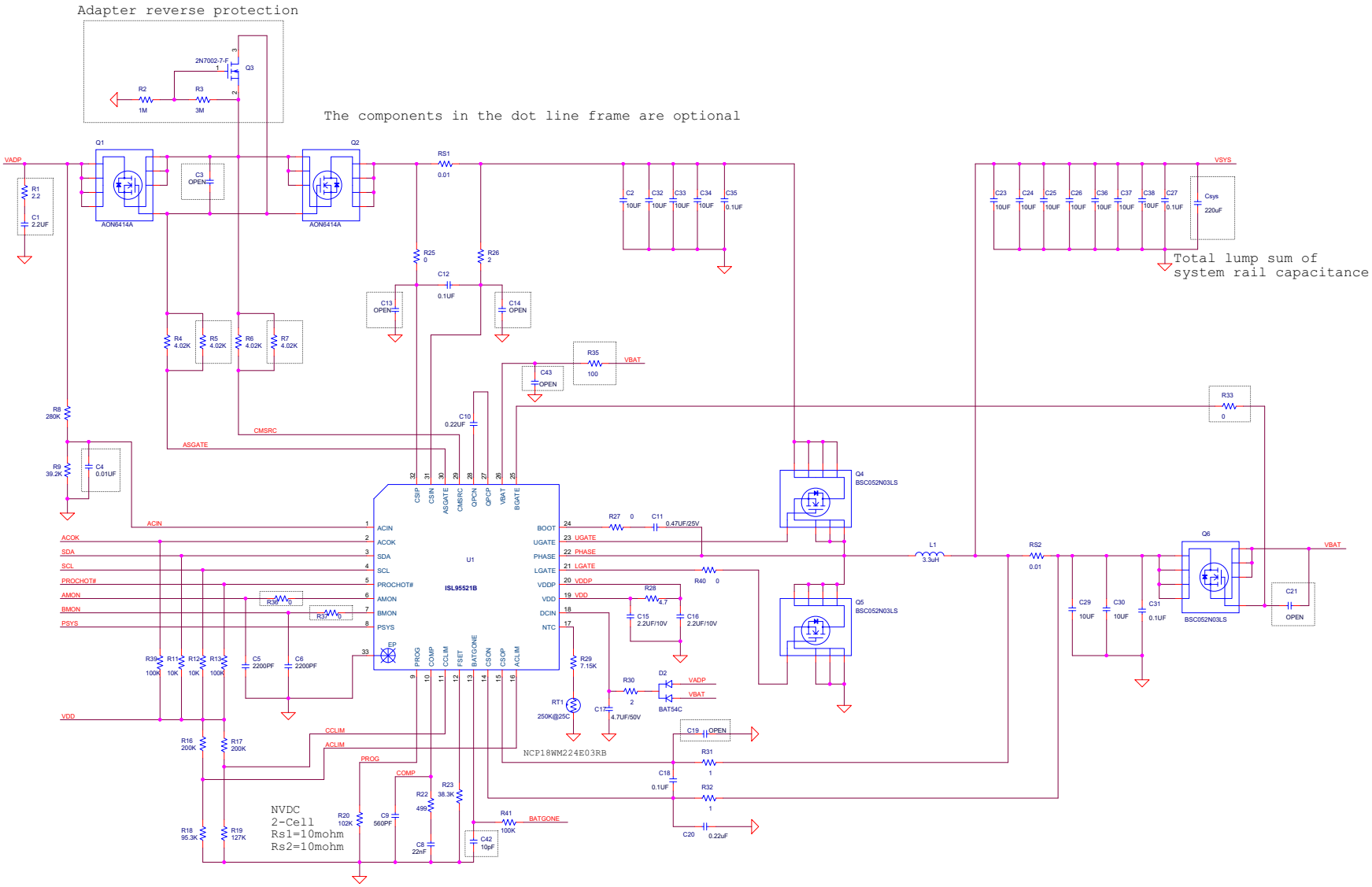

Figure 48. ISL95521B NVDC Configuration Reference Design

8. Layout Guidelines

Pin #	Symbol	Layout Guidelines
Bottom Pad	GND	Connect this ground pad to the ground plane through the low impedance path. Renesas recommends using at least fivevias to connect to ground planes in PCB to ensure there is sufficient thermal dissipation directly under the IC.
1	ACIN	Place the voltage divider resistors and the optional decoupling capacitor in general proximity of the controller.
2	ACOK	No special consideration.
3	SDA	
4	SCLK	
5	PROCHOT#	
6	AMON	No special consideration. Place the optional RC filter in general proximity of the controller.
7	BMON	
8	PSYS	No special consideration.
9	PROG	Place the PROG programming resistor in general proximity of the controller.
10	COMP	Place the compensation components in general proximity of the controller.
11	CCLIM	Place the CCLIM voltage divider resistors in general proximity of the controller.
12	FSET	Place the FSET programming resistor in general proximity of the controller.
13	BATGONE	Place the 100kΩ resistor series in the BATGONE signal trace and the optional decoupling capacitor in the general proximity of the controller.
14	CSON	Run two dedicated traces with decent width in parallel (close to each other to minimize the loop area) from the two terminals of the battery current sensing resistor to the IC. Place the differential-mode and common-mode RC filter components in the general proximity of the controller. Route the current sensing traces through vias to connect the center of the pads; or route the traces into the pads from the inside of the current sensing resistor. The following drawings show the two preferred ways of routing current sensing traces. 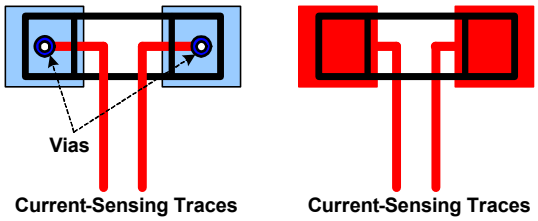
15	CSOP	
16	ACLIM	Place the ACLIM voltage divider resistors in the general proximity of the controller.
17	NTC	Place the resistor series with the NTC thermistor in the general proximity of the controller. Place the NTC thermistor at the point where the temperature is to be monitored. Note: if the NTC thermistor is too close to the switching components, it can couple the switching noise to the NTC pin.
18	DCIN	Place the OR diodes and the RC filter in the general proximity of the controller.
19	VDD	Place the RC filter from VDDP pin in the general proximity of the controller.
20	VDDP	Place the decoupling capacitor in the general proximity of the controller.
21	LGATE	Run LGATE trace in parallel with UGATE and PHASE traces on the same PCB layer. Use decent width. Avoid any sensitive analog signal trace from crossing over or getting close.

Pin #	Symbol	Layout Guidelines
22	PHASE	Run these two traces in a parallel fashion with decent width. Avoid any sensitive analog signal trace from crossing over or getting close. Recommend routing PHASE trace to high-side MOSFET source pin instead of general copper. The IC should be placed close to the switching MOSFET's gate terminals and keep the gate drive signal traces short for a clean MOSFET drive. The IC can be placed on the opposite side of the switching MOSFETs. Place the input capacitors as close as possible to the switching high-side MOSFET drain and the low-side MOSFET source; and use shortest PCB trace connection. Place these capacitors on the same PCB layer with the MOSFETs instead of on different layers and using vias to make the connection. Place the inductor input terminal to the switching high-side MOSFET drain and low-side MOSFET source terminal as close as possible. Minimize this phase node area to lower the electrical and magnetic field radiation but make this phase node area big enough to carry the current. Place the inductor and the switching MOSFETs on the same layer of the PCB.
23	UGATE	
24	BOOT	Place the bootstrap capacitor in the general proximity of the controller. Use decent wide trace. Avoid any sensitive analog signal trace from crossing over or getting close.
25	BGATE	Use decent width trace from the IC to the BGATE MOSFET gate.
26	VBAT	Place the RC filter in the general proximity of the controller. Run a dedicated trace from the battery positive connection point to the IC. In HPB configuration, separate this trace with the trace connecting the CSON pin.
27	QPCP	Place the charge pump flying capacitor in the general proximity of the controller. Route trace with decent width.
28	QPCN	
29	CMSRC	Run these two traces in parallel fashion with decent width.
30	ASGATE	
31	CSIN	Place the battery current sensing resistor right next to the inductor output. Run two dedicated trace with decent width in parallel (close to each other to minimize the loop area) from the two terminals of the adapter current sensing resistor to the IC. Place the differential-mode and common-mode RC filter components in general proximity of the controller. Route the current sensing traces through vias to connect the center of the pads; or route the traces into the pads from the inside of the current sensing resistor. The following drawings show the two preferred ways of routing current sensing traces. 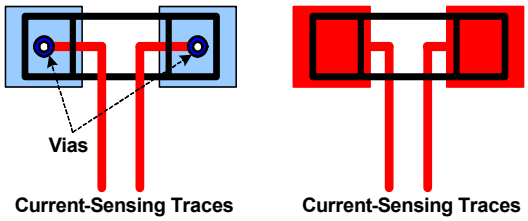
32	CSIP	

9. Revision History

Rev.	Date	Change
1.00	Jul 19, 2019	Updated links throughout. Added tape and reel parts to ordering information table and updated notes. Updated Pin descriptions for Pins 1, 18, 19, 20, and 24. Added information about recommended VDD/VDDP capacitors to the “Select the Switching Power MOSFET” on page 62” section on page 62. Added information about recommended bootstrap capacitors to the “Select the Bootstrap Capacitor” section on page 63. Added “Select the DCIN Filter” section on page 63. Updated Figures 47 and 48. Removed About Intersil section. Updated Disclaimer.
0.00	Aug 10, 2017	Initial release

10. Package Outline Drawing

For the most recent package outline drawing, see L32.4x4A.

L32.4x4A
32 LEAD QUAD FLAT NO-LEAD PLASTIC PACKAGE
Rev 5, 2/16

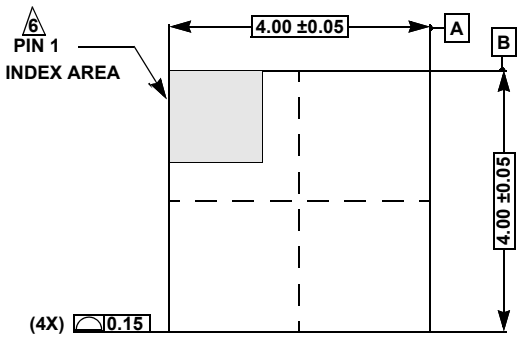

TOP VIEW

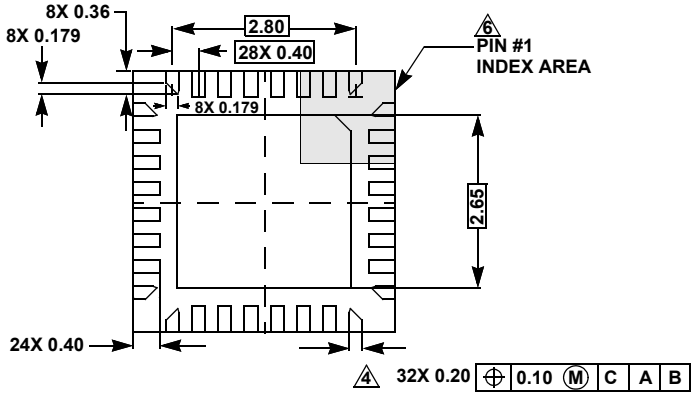

BOTTOM VIEW

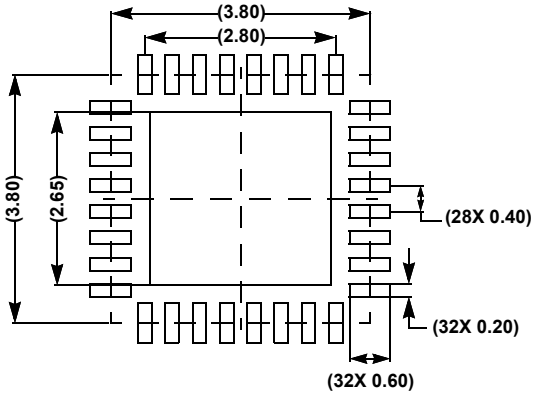

TYPICAL RECOMMENDED LAND PATTERN

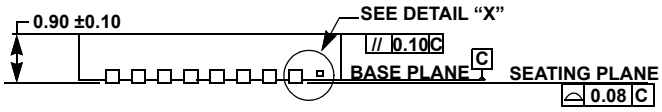

SIDE VIEW

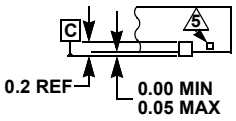

DETAIL "X"

NOTES:

1. Dimensions are in millimeters.
   Dimensions in ( ) for Reference Only.
2. Dimensioning and tolerancing conform to ASME Y14.5m-1994.
3. Unless otherwise specified, tolerance: Decimal ±0.05
4. Dimension applies to the metallized terminal and is measured between 0.15mm and 0.25mm from the terminal tip.
5. Tiebar shown (if present) is a non-functional feature.
6. The configuration of the pin #1 identifier is optional, but must be located within the zone indicated. The pin #1 identifier may be either a mold or mark feature.

Notice

1. Descriptions of circuits, software and other related information in this document are provided only to illustrate the operation of semiconductor products and application examples. You are fully responsible for the incorporation or any other use of the circuits, software, and information in the design of your product or system. Renesas Electronics disclaims any and all liability for any losses and damages incurred by you or third parties arising from the use of these circuits, software, or information.
2. Renesas Electronics hereby expressly disclaims any warranties against and liability for infringement or any other claims involving patents, copyrights, or other intellectual property rights of third parties, by or arising from the use of Renesas Electronics products or technical information described in this document, including but not limited to, the product data, drawings, charts, programs, algorithms, and application examples.
3. No license, express, implied or otherwise, is granted hereby under any patents, copyrights or other intellectual property rights of Renesas Electronics or others.
4. You shall not alter, modify, copy, or reverse engineer any Renesas Electronics product, whether in whole or in part. Renesas Electronics disclaims any and all liability for any losses or damages incurred by you or third parties arising from such alteration, modification, copying or reverse engineering.
5. Renesas Electronics products are classified according to the following two quality grades: "Standard" and "High Quality". The intended applications for each Renesas Electronics product depends on the product's quality grade, as indicated below.
   "Standard": Computers; office equipment; communications equipment; test and measurement equipment; audio and visual equipment; home electronic appliances; machine tools; personal electronic equipment; industrial robots; etc.
   "High Quality": Transportation equipment (automobiles, trains, ships, etc.); traffic control (traffic lights); large-scale communication equipment; key financial terminal systems; safety control equipment; etc.
   Unless expressly designated as a high reliability product or a product for harsh environments in a Renesas Electronics data sheet or other Renesas Electronics document, Renesas Electronics products are not intended or authorized for use in products or systems that may pose a direct threat to human life or bodily injury (artificial life support devices or systems; surgical implantations; etc.), or may cause serious property damage (space system; undersea repeaters; nuclear power control systems; aircraft control systems; key plant systems; military equipment; etc.). Renesas Electronics disclaims any and all liability for any damages or losses incurred by you or any third parties arising from the use of any Renesas Electronics product that is inconsistent with any Renesas Electronics data sheet, user's manual or other Renesas Electronics document.
6. When using Renesas Electronics products, refer to the latest product information (data sheets, user's manuals, application notes, "General Notes for Handling and Using Semiconductor Devices" in the reliability handbook, etc.), and ensure that usage conditions are within the ranges specified by Renesas Electronics with respect to maximum ratings, operating power supply voltage range, heat dissipation characteristics, installation, etc. Renesas Electronics disclaims any and all liability for any malfunctions, failure or accident arising out of the use of Renesas Electronics products outside of such specified ranges.
7. Although Renesas Electronics endeavors to improve the quality and reliability of Renesas Electronics products, semiconductor products have specific characteristics, such as the occurrence of failure at a certain rate and malfunctions under certain use conditions. Unless designated as a high reliability product or a product for harsh environments in a Renesas Electronics data sheet or other Renesas Electronics document, Renesas Electronics products are not subject to radiation resistance design. You are responsible for implementing safety measures to guard against the possibility of bodily injury, injury or damage caused by fire, and/or danger to the public in the event of a failure or malfunction of Renesas Electronics products, such as safety design for hardware and software, including but not limited to redundancy, fire control and malfunction prevention, appropriate treatment for aging degradation or any other appropriate measures. Because the evaluation of microcomputer software alone is very difficult and impractical, you are responsible for evaluating the safety of the final products or systems manufactured by you.
8. Please contact a Renesas Electronics sales office for details as to environmental matters such as the environmental compatibility of each Renesas Electronics product. You are responsible for carefully and sufficiently investigating applicable laws and regulations that regulate the inclusion or use of controlled substances, including without limitation, the EU RoHS Directive, and using Renesas Electronics products in compliance with all these applicable laws and regulations. Renesas Electronics disclaims any and all liability for damages or losses occurring as a result of your noncompliance with applicable laws and regulations.
9. Renesas Electronics products and technologies shall not be used for or incorporated into any products or systems whose manufacture, use, or sale is prohibited under any applicable domestic or foreign laws or regulations. You shall comply with any applicable export control laws and regulations promulgated and administered by the governments of any countries asserting jurisdiction over the parties or transactions.
10. It is the responsibility of the buyer or distributor of Renesas Electronics products, or any other party who distributes, disposes of, or otherwise sells or transfers the product to a third party, to notify such third party in advance of the contents and conditions set forth in this document.
11. This document shall not be reprinted, reproduced or duplicated in any form, in whole or in part, without prior written consent of Renesas Electronics.
12. Please contact a Renesas Electronics sales office if you have any questions regarding the information contained in this document or Renesas Electronics products.

(Note1) "Renesas Electronics" as used in this document means Renesas Electronics Corporation and also includes its directly or indirectly controlled subsidiaries.
(Note2) "Renesas Electronics product(s)" means any product developed or manufactured by or for Renesas Electronics.

(Rev.4.0-1 November 2017)

Corporate Headquarters

TOYOSU FORESIA, 3-2-24 Toyosu,
Koto-ku, Tokyo 135-0061, Japan
www.renesas.com

Trademarks

Renesas and the Renesas logo are trademarks of Renesas Electronics Corporation. All trademarks and registered trademarks are the property of their respective owners.

Contact Information

For further information on a product, technology, the most up-to-date version of a document, or your nearest sales office, please visit:
www.renesas.com/contact/

© 2019 Renesas Electronics Corporation. All rights reserved.