EN: This Datasheet/Document is presented by the manufacturer.

Please visit our website for pricing and availability at www.hestore.hu.

◆ 产品特点 Features

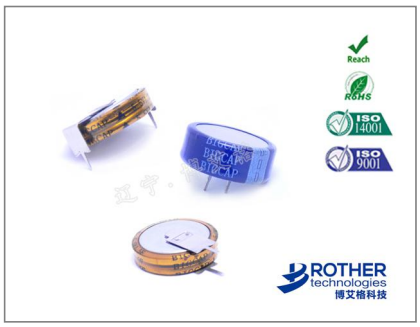

- 环形设计，产品结构稳定，性能更加可靠
  Circular design, product structure is stable, performance more reliable;
- 符合 ROHS 标准，无 Cd、Pb 等污染物质
  Comply with ROHS standards no Cd Pb and other pollutants;
- 充放电循环寿命长
  Long charge-discharge cycle life;
- 漏电流低，适合时钟芯片数据保持
  Low leakage current, suitable for keeping the clock chip data.

◆ 应用 Applications

- 工作电流μA~几百 mA，工作时间秒级至几个月
  Working current from μA~several hundreds mA, working time from seconds to months;
- 可用于手摇手电筒、电表、时钟保持、家电控制器、玩具等
  Can be used for Hand-cranked flashlight, Electric meter, The clock to keep, Electrical home appliances control, Toys, etc.

◆ 标准测试条件 Standard test conditions

在标准大气压，温度5 ~35℃，相对湿度小于85 %条件下进行测试；本规格书标准测试条件为标准大气压，温度25℃，相对湿度小于60%。

Products are tested under normal pressure, the temperature range is from 5-35 ℃ and relative humidity is less than RH85% .The standard test conditions in this product specification are as follows: under normal pressure; the temperature at 25℃ and the relative humidity less than 60%.

◆ BIGCAP® 典型应用电路 BIGCAP® Typical Application Circuit

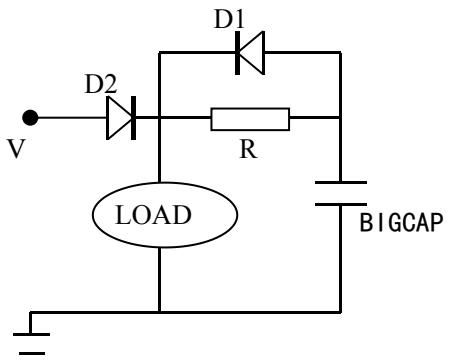

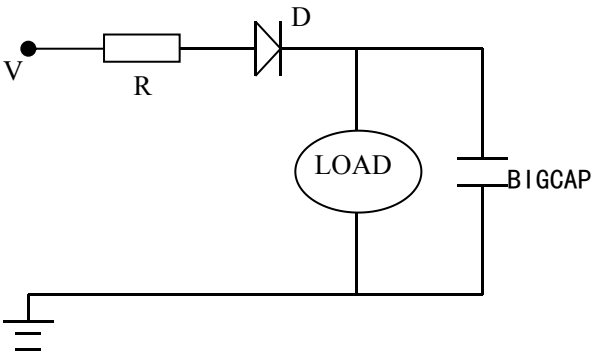

说明：以上电路仅供参考

Description: the above circuit is for reference only.

◆ BIGCAP®标准产品外形尺寸图 BIGCAP® Shape of standard product

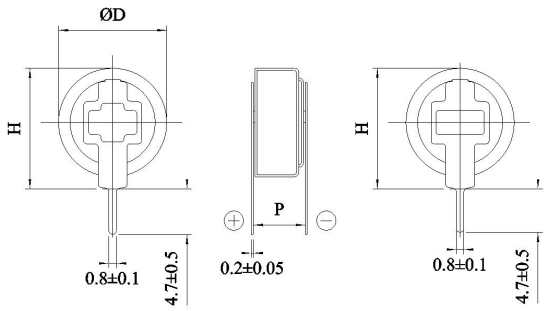

V 型

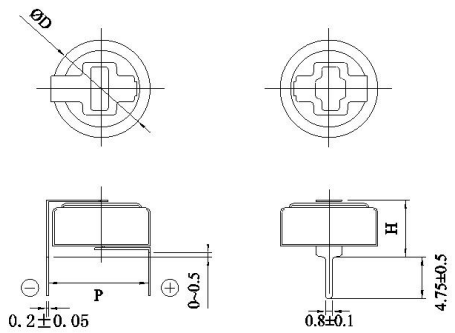

H 型

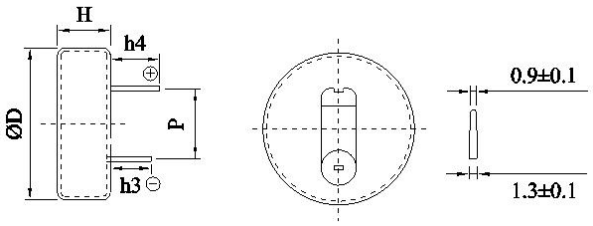

C 型

◆ BIGCAP®标准产品规格 BIGCAP® Standard product specification

Sheet 1

型号 Part Number	额定电压 Nominal Voltage,V dc	容量 Capacitance F	容量允许偏差 Cap.olerance	最大内阻 ESR（Max），Ω		尺寸 Size，mm		质量 Weight g	体积 Volume ml
				AC@1kHz	DC	ΦD×H±1.0	P±0.5		
BCE005R5C104FS	5.5	0.10	±20%	40	60	13.5×6.6	5	3.2	0.94
BCE005R5H104FS	5.5	0.10	±20%	40	60	11.5×6.0	10	1.4	0.62
BCE005R5V104FS	5.5	0.10	±20%	40	60	11.5×12.5	5	1.4	0.52
BCE005R5C224FS	5.5	0.22	±20%	40	60	13.5×6.6	5	3.1	0.94
BCE005R5H224FS	5.5	0.22	±20%	40	60	11.5×6.0	10	1.5	0.62
BCE005R5V224FS	5.5	0.22	±20%	40	60	11.5×12.5	5	1.5	0.52
BCE005R5C334FAS	5.5	0.33	±20%	50	75	13.5×6.6	5	3.9	0.94
BCE005R5H334FAS	5.5	0.33	±20%	50	75	11.5×6.0	10	1.5	0.62
BCE005R5V334FAS	5.5	0.33	±20%	50	75	11.5×12.5	5	1.5	0.52
BCE005R5C334FBS	5.5	0.33	±20%	50	75	13.5×7.3	5	3.9	1.04
BCE005R5H334FBS	5.5	0.33	±20%	50	75	11.5×6.0	10	1.5	0.62
BCE005R5V334FBS	5.5	0.33	±20%	50	75	11.5×12.5	5	1.5	0.52
BCE005R5C474FS	5.5	0.47	±20%	40	60	13.5×7.3	5	3.2	1.04
BCE005R5H474FS	5.5	0.47	±20%	40	60	11.5×6.0	10	1.6	0.62
BCE005R5V474FS	5.5	0.47	±20%	40	60	11.5×12.5	5	1.6	0.52

Sheet 2

型号 Part Number	存储能量 Max. Stored Energy，mWh	能量密度 Energy Density		功率密度 Power Density		额定电流 Nominal Current,A	最大电流 Max Current,A	72hLC Leakage Current at 72h (25℃) ,uA
		质量比 Wh/kg Gravimetric	体积比 Wh/L Volumetric	质量比 KW/kg Gravimetric	体积比 KW/L Volumetric			
BCE005R5C104FS	0.42	0.13	0.45	0.04	0.13	0.012	0.032	<1
BCE005R5H104FS	0.42	0.30	0.68	0.09	0.20	0.012	0.032	<1
BCE005R5V104FS	0.42	0.30	0.81	0.09	0.24	0.012	0.032	<1
BCE005R5C224FS	0.92	0.30	0.98	0.04	0.13	0.015	0.042	<1
BCE005R5H224FS	0.92	0.62	1.49	0.08	0.20	0.015	0.042	<1
BCE005R5V224FS	0.92	0.62	1.78	0.08	0.24	0.015	0.042	<1
BCE005R5C334FAS	1.39	0.36	1.47	0.03	0.11	0.016	0.044	<1
BCE005R5H334FAS	1.39	0.92	2.24	0.07	0.16	0.016	0.044	<1
BCE005R5V334FAS	1.39	0.92	2.67	0.07	0.19	0.016	0.044	<1
BCE005R5C334FBS	1.39	0.36	1.33	0.03	0.10	0.016	0.044	<1
BCE005R5H334FBS	1.39	0.92	2.24	0.07	0.16	0.016	0.044	<1
BCE005R5V334FBS	1.39	0.92	2.67	0.07	0.19	0.016	0.044	<1
BCE005R5C474FS	1.97	0.62	1.90	0.04	0.12	0.031	0.085	<2
BCE005R5H474FS	1.97	1.23	3.18	0.08	0.20	0.031	0.085	<2
BCE005R5V474FS	1.97	1.23	3.80	0.08	0.24	0.031	0.085	<2

◆ BIGCAP®标准产品外形尺寸图 BIGCAP® Shape of standard product

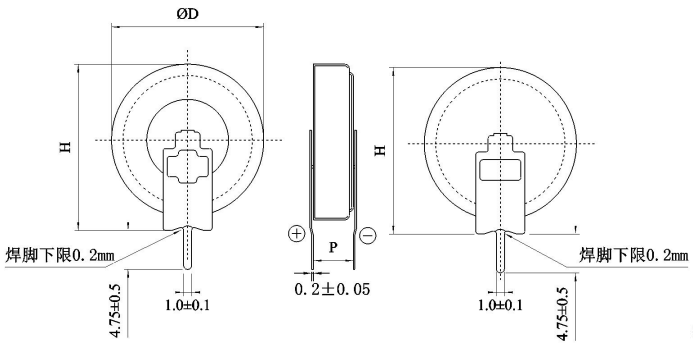

V 型

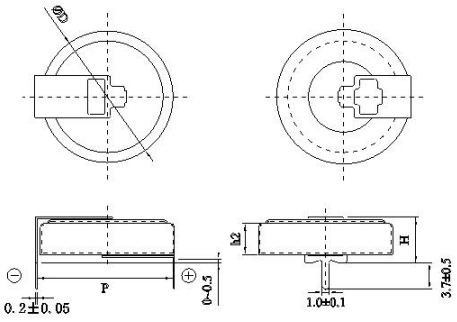

H 型

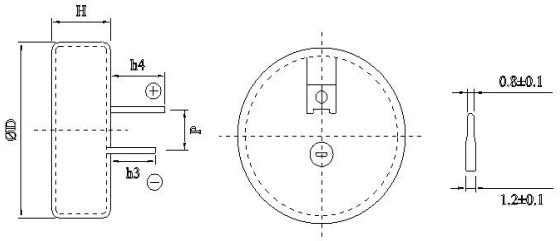

C 型

◆ BIGCAP®标准产品规格 BIGCAP® Standard product specification

Sheet 3

型号 Part Number	额定电压 Nominal Voltage , V dc	容量 Capacitance F	容量允许偏差 Cap.olerance	最大内阻 ESR（Max），Ω		尺寸 Size，mm		质量 Weight g	体积 Volume ml
				AC@1kHz	DC	ΦD×H±1.0	P±0.5		
BCE005R5C105FS	5.5	1.0	±20%	15	22.5	20.5×7.6	5	9	2.51
BCE005R5H105FS	5.5	1.0	±20%	15	22.5	19×6.5	20	4.3	1.84
BCE005R5V105FS	5.5	1.0	±20%	15	22.5	19×20.5	5	4.3	1.42
BCE005R5C155FS	5.5	1.5	±20%	10	15	20.5×7.6	5	9.3	2.51
BCE005R5H155FS	5.5	1.5	±20%	10	15	19×6.5	20	4.5	1.84
BCE005R5V155FS	5.5	1.5	±20%	10	15	19×20.5	5	4.5	1.42

Sheet 4

型号 Part Number	存储能量 Max. Stored Energy，mWh	能量密度 Energy Density		功率密度 Power Density		额定电流 Nominal Current,A	最大电流 Max Current,A	72hLC Leakage Current at 72h (25℃) ,uA
		质量比 Wh/kg Gravimetric	体积比 Wh/L Volumetric	质量比 KW/kg Gravimetric	体积比 KW/L Volumetric			
BCE005R5C105FS	4.20	0.47	1.67	0.04	0.14	0.053	0.130	<2
BCE005R5H105FS	4.20	0.98	2.28	0.08	0.19	0.053	0.130	<2
BCE005R5V105FS	4.20	0.98	2.96	0.08	0.24	0.053	0.130	<2
BCE005R5C155FS	6.30	0.68	2.51	0.05	0.20	0.071	0.175	<3
BCE005R5H155FS	6.30	1.40	3.43	0.11	0.27	0.071	0.175	<3
BCE005R5V155FS	6.30	1.40	4.44	0.11	0.36	0.071	0.175	<3

◆ 典型特性 Typical characteristics

产品依据标准 **Product Standard**	依据 IEC 62391-1，GB/T2693—2001，Q/BIG001—2013 测试标准 According to IEC 62391-1，GB/T2693—2001，Q/BIG001—2013 test standard	
工作温度范围 Category Temperature Range	－25℃~＋70℃	
存储温度范围（at 0V） Storage Temperature Range (at 0V)	－25℃~＋70℃	
温度特性 Characteristics in Different Temperature	－25℃	与初始值比较，|ΔC/C|≤50%，ESR≤4 倍初始规定值 Compared with the initial value, |ΔC/C |≤50%, ESR≤4 initial specified value
	＋70℃	与初始值比较，|ΔC/C|≤30%，ESR≤初始规定值 Compared with the initial value, |ΔC/C |≤30%, ESR≤ initial specified value
湿热特性（at 40±2℃,90~95%RH） Humidity Characteristics(at40±2℃,90~95%RH)	240h	与初始值比较，|ΔC/C|≤30%，ESR≤2 倍初始规定值，无漏液机械损伤 Compared with the initial value, |ΔC/C |≤30%, ESR≤2 Initial specified value, no leaked electrolyte or other mechanical damage
高温寿命（at 5.0V,70±2℃） High Temperature Life (at 5.0V,70±2℃)	1000h	与初始值比较，|ΔC/C|≤30%，ESR≤4 倍初始规定值，无漏液机械损伤 Compared with the initial value, |ΔC/C |≤30%, ESR≤4 Initial specified value, no leaked electrolyte or other mechanical damage
循环寿命（at U_0, 25±2℃） Cycle Life (at U_0, 25±2℃)	500000 次	
存放寿命特性（at 0V,70±2℃） Shelf Life Characteristics (at 0V,70±2℃)	1000h	与初始值比较，|ΔC/C|≤20%，ESR≤3 倍初始规定值，无漏液机械损伤 Compared with the initial value, |ΔC/C |≤20%, ESR≤3 Initial specified value, no leaked electrolyte or other mechanical damage
自放电特性（电压保持特性）（at 25℃） Self Discharge Characteristics (Voltage holding characteristics) (at 25℃)	正负极间电压大于等于 4.2V The voltage between the positive and negative electrode≥4.2V	充电过程：无负载，额定电压充电 8h 放置过程：相对湿度小于 60%RH，开路放置 24h Charging process: normal temperature,non-loaded,charge at rated voltage for 8h Lay aside process:temperature less than 25℃,relative humidity less than 60%RH,lay aside 24h at open circuit

◆ 标识 Markings

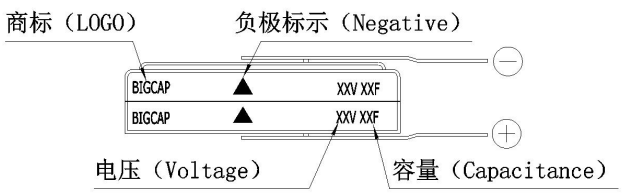

V 型

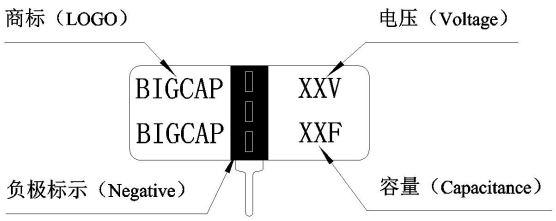

C 型

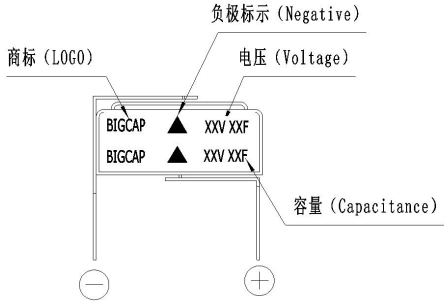

H 型

◆ 包装方式 Packaging method

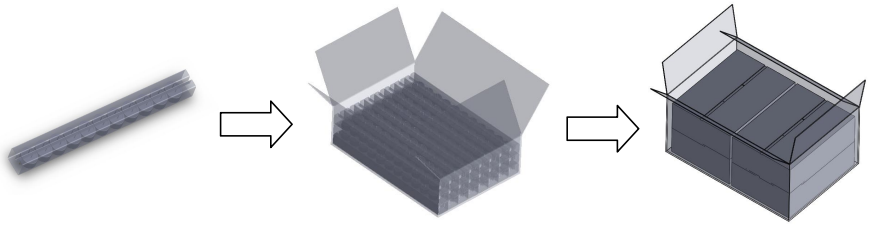

包装管 Packing tube　　内箱 Inner box　　外箱 Outside box

◆ 特性曲线 characteristic curve

（1）温度特性 Characteristics in different temperature

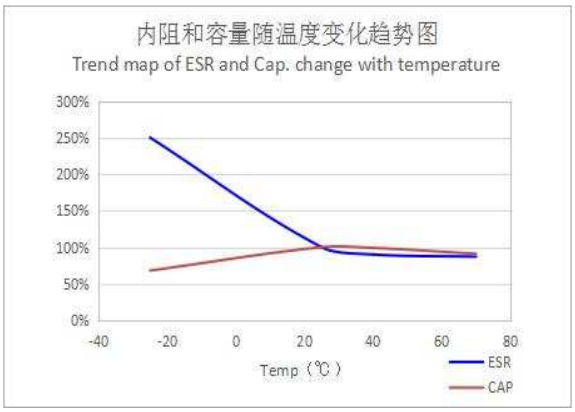

（2）漏电流特性 LC characteristics

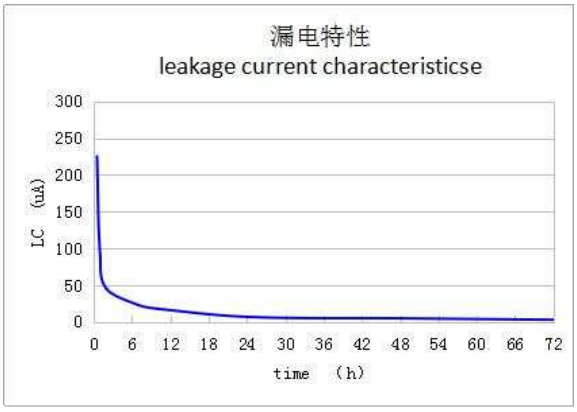

（3） 高温特性 High Temperature Life (at 5.0V,70℃）

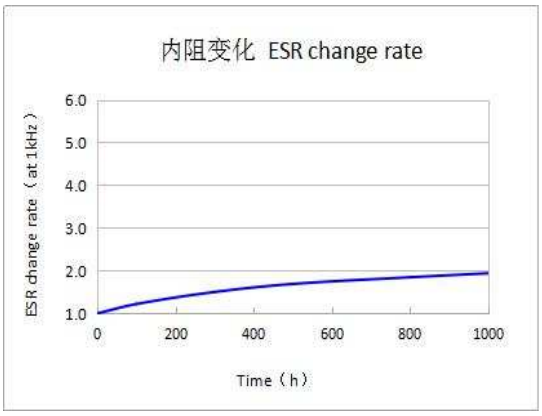

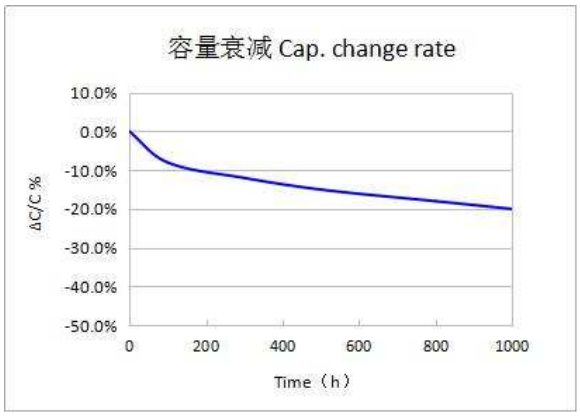

（4）放电特性特性 LC characteristics

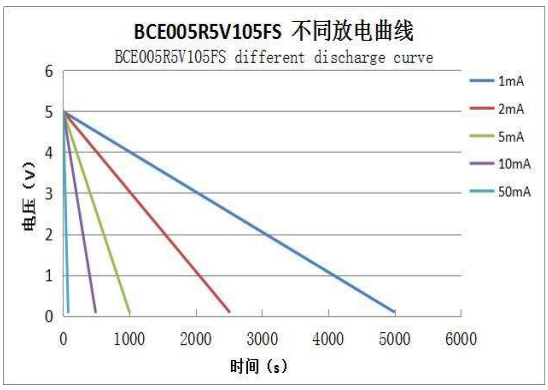

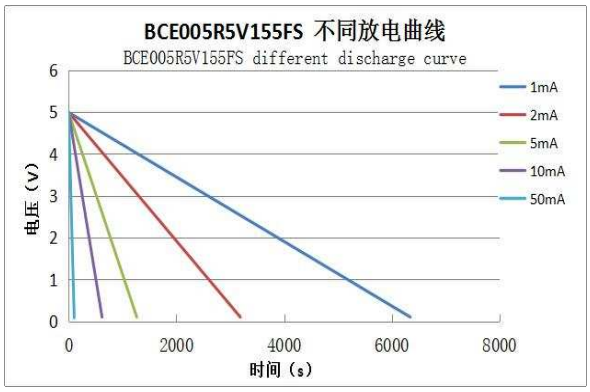

*以上特性曲线图均是趋势图，每一个型号的具体数据请与厂家技术支持联系

*The above characteristic curves are trend charts. Please contact the manufacturer's technical support for the specific data of each model

◆ BIGCAP® 超级电容器测试方法 BIGCAP® Measuring Method Of BIGCAP

Sheet 1

容量 （Capacitance）	恒流放电法测量 Constant current discharge of measure 1、恒流/恒压源的直流电压设定为额定电压（U_R）。 Set the DC voltage source to the rated voltage (U_R). 2、设定规定的恒电流放电装置的恒定电流值。 Sets constant current values of a specified constant current discharge device. 3、将开关S切换到直流电源，在恒流/恒压源达到额定电压后恒压充电30min。 Switch the switch S to DC power supply, constant voltage charge for 30min after the voltage reachs to rated voltage. 4、在充电30min结束后，将开关S变换到恒流放电装置，以恒定电流进行放电。 After charging 30min, transform the switch S to constant current discharge device, to discharge at constant current. 5、测量电容器两端电压从U1到U2的时间t1和t2，如图所示，根据下列等式计算电容量值： Measure the discharge time from U1 to U2 (t1, t2), calculate capacitance using the following formula: 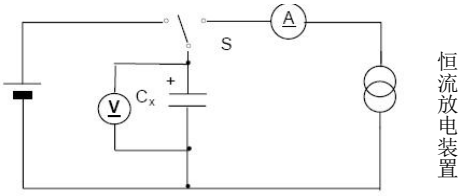 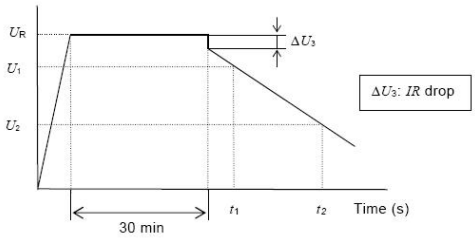 $C = \frac{I \times (t_2 - t_1)}{U_1 - U_2}$
内阻 （Resistance）	交流阻抗方法测量 Equivalent series resistance: 采用如下图所示的电路进行测量 ESR shall be measured from the circuit below： 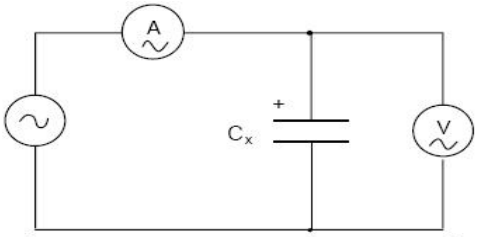 电容器的内阻Ra应通过下式计算：$R_a = \frac{U}{I}$ ESR Ra can be calculated from the formula $R_a = \frac{U}{I}$ Ra 交流内阻（mΩ/Ω）Equivalent series resistance (mΩ/Ω) U 交流电压有效值（V r.m.s）U Ac voltage valid values (V r.m.s) I 交流电流有效值（V r.m.s）I Ac current valid values (V r.m.s)

Sheet 2

漏电流 （Leakage Current）	直流漏电流的测量原理如下 Leakage current shall be measured from the circuit below: 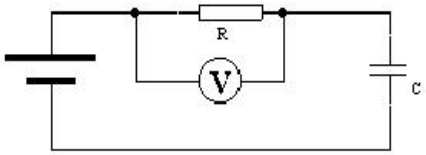 1、放电：该测量开始前，电容器应进行充分放电。放电过程持续1h到24h。 Discharge: Before the start of the measurement, supercapacitor should be fully discharge, discharge process for 1h to 24h. 2、漏电流的测量应额定温度和额定电压（U_R）。经过最大30min充电时间后达到95%充电电压，充电时间从30min，1h，2h，4h，72h中选择。 Leakage current measurement shall be carried out under the rated temperature and voltage rating (UR). The voltage of product reached 95% rated voltage after the biggest charging time for 30min, charging time chooses from 30min, 1h, 2h, 4h, 72h. 3、应使用稳定的电源如直流稳压电源。 Should use a stable power supply, such as DC regulated power supply. 4、通过1000Ω以下的保护电阻给电容器施加电压。 Charge process should be through the protection under 1000Ω resistance.
自放电 （Self discharge）	测量开始前，电容器应进行充分放电，放电过程持续1h到24h，在电容器两端直接施加额定电压U，不使用保护电阻，充电时间为8h，包括电压达到施加电压95%的最大30min充电时间，将电容器两端从电压源断开。电容器应置于标准常温常压条件下放置24h。直流电压表的内阻应大于1MΩ。 Before the start of the measurement, super capacitor should be fully discharge, discharge process for 1h to 24h. Charge the super capacitor to rated voltage without protection resistance, charging time for 8h(include the voltage of product reached 95% rated voltage after the biggest charging time for 30min). Disconnect the super capacitor from the power supply. Super capacitor should be placed in the standard atmospheric pressure conditions for 24h. DC voltmeter internal resistance should be greater than 1mΩ. 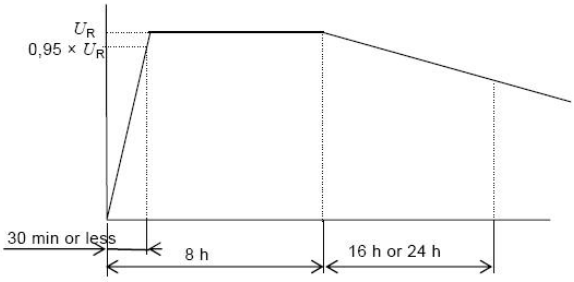

◆ 焊接条件 Soldering Condition

建议产品的焊接条件为流动焊接，如下图：

The recommendation soldering conditions of the product in which flow soldering is possible are as graph.

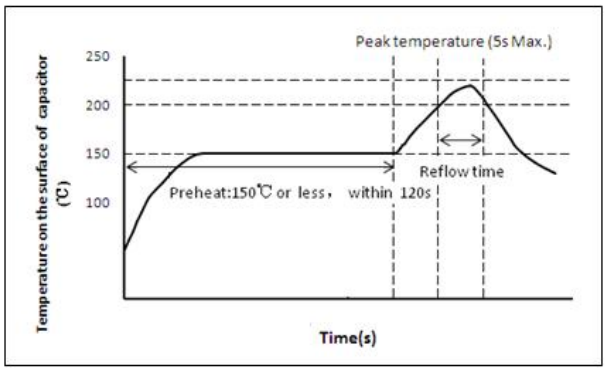

焊接时需注意：

Caution for Using Aluminum Electrolytic Capacitors：

1、 短时间内按照上述焊接条件，开展低温焊接工作；

Carry out low temperature welding work according to the above welding conditions in a short time;

2、 当电压达到 0.3V 以上时，不要回流焊接；

When the voltage is above 0.3V, do not backflow;

3、 有关更多回流焊接的条件请咨询我们。

Please consult us for more conditions of reflow soldering.

◆ 使用注意事项 Cautions For Use

（1）超级电容器极性问题 The polarity of super capacitor

与普通电解电容器或电池不同的是，由于超级电容器正负极采用的是同种材质，从理论上讲是不存在极性的；而超级电容器所标识的极性是生产商在生产工艺过程制定的，当电容使用中不小心短期反向使用，不会造成电容器实质性破坏，调整为正向可保证使用，但不可长期反向使用，会造成电容寿命特性迅速衰减。

Unlike ordinary electrolytic capacitor or battery, the material of positive and negative polarity of super capacitor is same, so theoretically super capacitor has no polarity; the polarities marked on super capacitor are established by manufacturers in the production process, when the polarities are used reversely in short-term, it won't cause substantial damage on capacitor, and it can be used normally after adjusting to the right polarities. But if reversely use for a long time, the life of super capacitor will decay quickly.

（2）关于超级电容器充电问题 Super capacitor charging information

超级电容器充电需要采用不超过额定电压的直流电压，可采用限流、恒流、恒功率、恒电压等多种充电方式；超级电容器充电时可能会拉低充电电源电压，直到电容器充满维持电压平衡。

To charge a super capacitor requires DC voltage that no more than the rated voltage. It can be charged by a variety of

methods such as current limit, constant current, constant power, constant voltage; when charging, the super capacitor may lower the voltage of charging power supply until the capacitor is full to maintain voltage balance.

（3）超级电容器的内阻及容量问题 Internal resistance and capacitance of super capacitor

在充放电过程中，超级电容器的内阻引起的 IR 降，会损失电容器的充放电效率，故电容器内阻大小在一定程度上决定了电容器品质的优劣，而由于超级电容器的内阻要大于普通电容器，在交流电路或高频率充放电过程中，电容会发热，造成寿命迅速衰减，这也是超级电容一般只用于直流电路的原因。

与普通电容器相比，超级电容器具有较大的时间常数 τ，所以充放电时间均较长，也正因为如此，不适合连续的大电流频繁工作，会引起发热性能迅速衰减。超级电容器的频率特性表现为高频率下，碳电极微孔中的正负离子响应时间较长，故表现的容量很小。不可采用普通测量电容器设备交流测量容量，而是要采用基于电池测量 mAh 方法进行测试。

In the process of charging and discharging, super capacitor’s IR drop caused by inner resistance will leads to lose of efficiency of capacitor charging and discharging, so the size of capacitor determines the quality of capacitor to some extent; due to the internal resistance of the super capacitor is higher than normal capacitors, so in the process of charge and discharge by AC circuit or high frequency circuit, super capacitor will become heating, and this cause life decay quickly, that’s why super capacitor only commonly used in DC circuit.

Compared with ordinary capacitor, super capacitor has greater time constant τ, so the charge and discharge time is longer; also because of this,it is not suitable for working with continuous large current frequently as it can cause performance decay rapidly. The frequency characteristic of super capacitor is: the response time of positive and negative ions in carbon electrode pore is longer, so the capacity appears very small. It is not allowed to measure super capacitor by using equipment for testing common capacitors and AC measuring methods, it should be measured by methods for measuring battery for mAh.

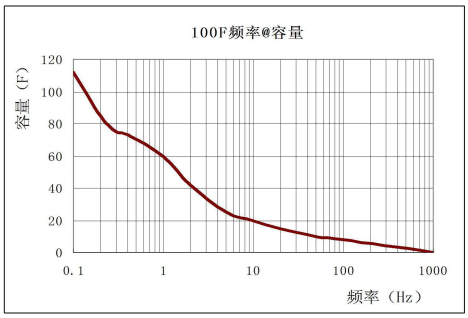

（4）运输及储存 Transport and storage

产品运输过程应防止产品受潮，储存温度应为-30℃~50℃、相对湿度小于 60%，最大湿度不可超过 85%，否则会导致电容受潮性能劣化或生锈。

Should prevent products be affected with damp in product transportation, the storage temperature should be -30℃ to 50℃, relative humidity less than 60%, the maximum humidity no more than 85%, otherwise it will cause degradation of capacitor performance or rust.

（5）安装与焊接 Installation and welding

超级电容器用于双面电路板上时，要注意连接处不可经过电容器可触及的地方，否则会导致产品短路过压及电容器损坏。安装过程及安装后，不可强行扭动或倾斜电容器，不得用力拉拽引线，应先断针及折弯后焊接。在焊接过程中要避免使电容器过热（1.6mm 的印刷线路板，焊接时应为 260℃，时间不超过 5s），焊接后，线路板和电容器要清洗干净。

When super capacitors are used for double-sided circuit boards, must pay attention the joint should not contact the capacitor, otherwise it will lead to short circuit, over-voltage and damage of capacitor. During the process of installation and

after installation, do not twist or tilted the capacitor, do not be forcibly pull the wires. Capacitors should be welded after cutting off and bending the leads. In the welding process, pay attention to avoid overheating of the capacitor (for a 1.6 mm thickness printed circuit board, the welding temperature should be 260℃, time is not more than 5s) , circuit board and the capacitor should be clean after welding.

（6）超级电容器短路判断 The judgement of short circuit of Super capacitor

短路电容应不能进行充放电，在电容正负极间施加直流电压，电容电压不升高，可判定短路，用万用表判定时，新电容在为充电时，以欧姆档测量（短路挡）指示为短路状态，是正常现象，不能确定电容即为短路，应观察阻值是否增加，如增加即为非短路。

When short circuit, the capacitor can not be charged and discharged. Adopt a DC voltage between the positive and negative electrode of capacitor, if the voltage does not rise, then we can determine short circuit occurs; when using a multimeter to judge, when charging a new capacitor, it is a normal phenomenon that ohms shift (short circuit shift) display short circuit state, at this time, we can not make sure whether the capacitor is short circuit or not, we should observe whether the resistance value is increased, an increasing on resistance value means no short circuit occurs.

（7）串联及并联使用问题 Use in series and parallel

相同超级电容器串联使用时，总电压=串联个数×单体耐压；总容量=单体容量÷串联个数；总能量=串联个数×单体容量，总内阻=串联个数×单体内阻。

三个及以上串联存在单体间的电压均衡问题，需要考虑采用均衡电路，用于保证长期使用过程中电容不能过电压使用，从而引起电容器寿命衰减及损坏。客户在自行串联使用时，建议同批次产品一起使用，不建议不同批次产品混用。

超级电容器进行并联使用时，可以不同容值的并联，采用相同电压充电，但要注意各个电容之间的电流平衡问题以及相互隔离，避免由于放电后电势差产生的相互反向充电。

When same super capacitors used in series, the total voltage = capacitor number x capacitor voltage; the total capacitance =single capacitor capacitance / capacitor number; total energy = capacitor number x single capacitor’s capacitance; total resistance = capacitor number x single capacitor’s resistance.

There is a voltage balance problem when 3 pcs or above capacitors used in series, so an equalization circuit is required to ensure the capacitor will not over-voltage in long term use process, as over-voltage will cause decay and damage of capacitor. When customers use the product in series by themselves, we recommend that using the same batch of products, and don’t mix up different batches of products.

Super capacitors in different capacitance value can be used in parallel, theses capacitors should be charged by the same voltage, but should pay attention to the current balance problem between the capacitors and mutual isolation, to avoid potential difference happened after discharge.

（8）其它使用上的问题，请向生产厂家咨询或参照 BIGCAP®超级电容器使用说明的相关技术资料执行。

Other problems please consult the manufacturer or refer to BIGCAP® super capacitor relevant technical data.

（9）规格书若有更改我司不另行通知，我司保留可能出现的各种更改权利，最终解释权归辽宁博艾格电子科技有限公司所有。

If there is any change in the specification without prior notice, our company reserves the right to make any possible change, and the final interpretation right belongs to liaoning brother electronic technology co., LTD.