EN: This Datasheet/Document is presented by the manufacturer.

Please visit our website for pricing and availability at www.hestore.hu.

THIS DRAWING IS UNPUBLISHED. RELEASED FOR PUBLICATION -,- .
© COPYRIGHT - By - ALL RIGHTS RESERVED.

LOC	DIST
CM	00

REVISIONS

P	LTR	DESCRIPTION	DATE	DWN	APVD
	S	REVISED PER ECR-12-013323	09AUG12	KH	TM

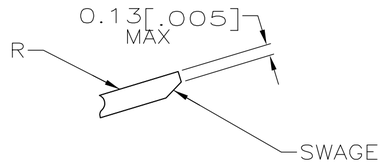

DETAIL D
SCALE 20:1

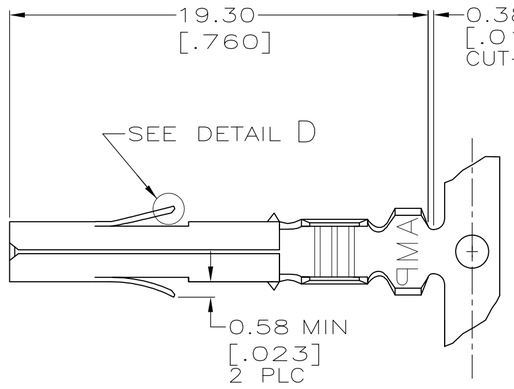

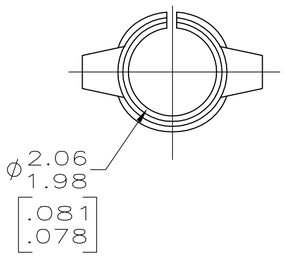

SCALE 10:1

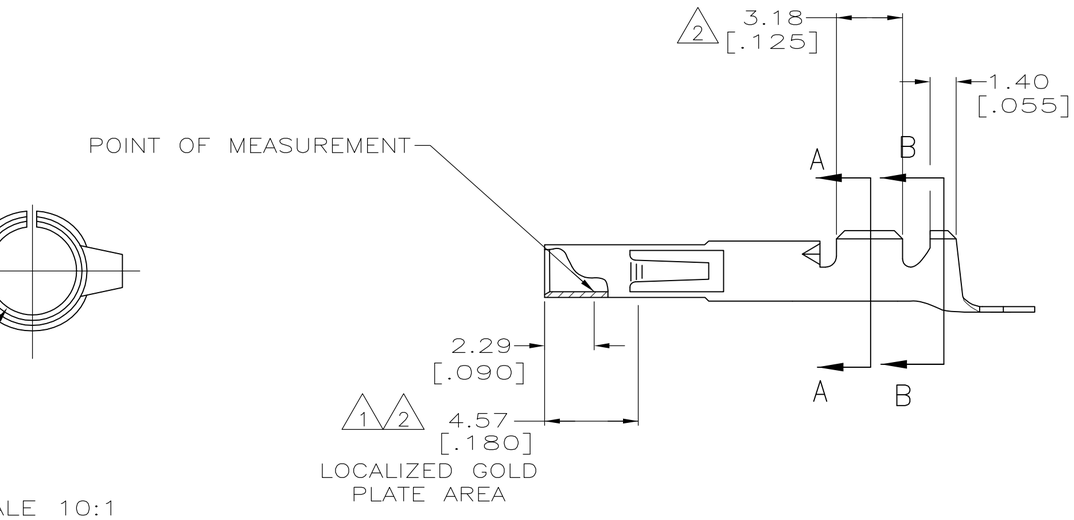

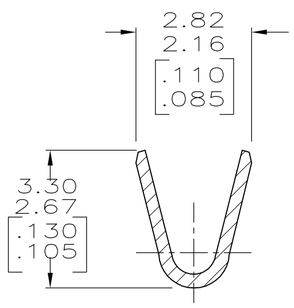

SECTION A-A
SCALE 10:1

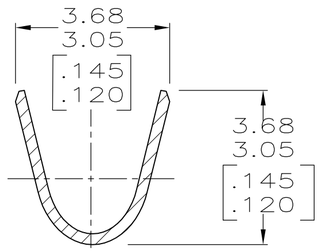

SECTION B-B
SCALE 10:1

1. 0.00076 [.000030] THICK GOLD OVER NICKEL ON INSIDE OF RECEPTACLE; REMAINDER OF CONTACT IS NICKEL PLATED.
2. 0.00076 [.000030] THICK GOLD OVER NICKEL ON INSIDE OF RECEPTACLE AND WIRE BARREL; REMAINDER OF CONTACT IS NICKEL PLATED.
3. NOT MANUFACTURED UN USA.
4. DIMENSIONS IN BRACKETS ARE IN INCHES.
5. WIRE RANGE: 24-18 AWG
6. INSULATION RANGE: 1.02-2.54 [.040-.100] DIA.

MATERIAL	FINISH	PART NUMBER
0.25[.010] BRASS	GOLD 1	350689-7
0.25[.010] PH BRZ	GOLD 1 3	350689-6
0.25[.010] PH BRZ	PRE-TIN	350689-3
0.25[.010] BRASS	GOLD 2	350689-2
0.25[.010] BRASS	PRE-TIN	350689-1

THIS DRAWING IS A CONTROLLED DOCUMENT.

DIMENSIONS: mm

TOLERANCES UNLESS OTHERWISE SPECIFIED:
0 PLC ± -
1 PLC ± -
2 PLC ± 0.13[.005]
3 PLC ± -
4 PLC ± -
ANGLES ± 0°30'

MATERIAL -
FINISH -

DWN K. WHITAKER 13-JAN-04
CHK S. RIDGILL 13-JAN-04
APVD S. RIDGILL 13-JAN-04
PRODUCT SPEC —
APPLICATION SPEC —
WEIGHT —

TE Connectivity

NAME
SOCKET,(LOOSE PIECE)
UNIVERSAL MATE-N-LOK TM

SIZE	CAGE CODE	DRAWING NO	RESTRICTED TO
A2	00779	C-350689	—

CUSTOMER DRAWING | SCALE 5:1 | SHEET 1 OF 1 | REV S

350689

1471-9 (3/11)