EN: This Datasheet/Document is presented by the manufacturer.

Please visit our website for pricing and availability at www.hestore.hu.

OPTO-4CH

4 csatornás optocsatolós modul, PC817 optocsatolóval

100.422.38
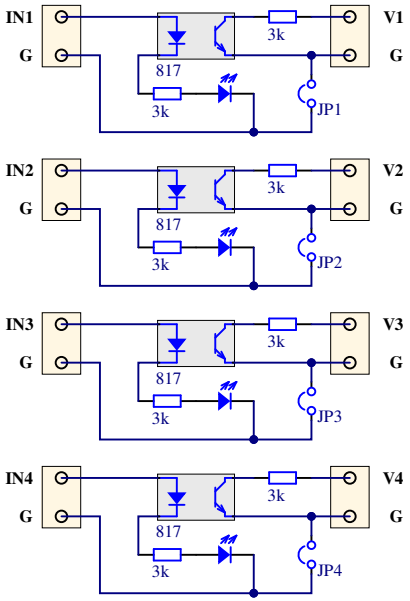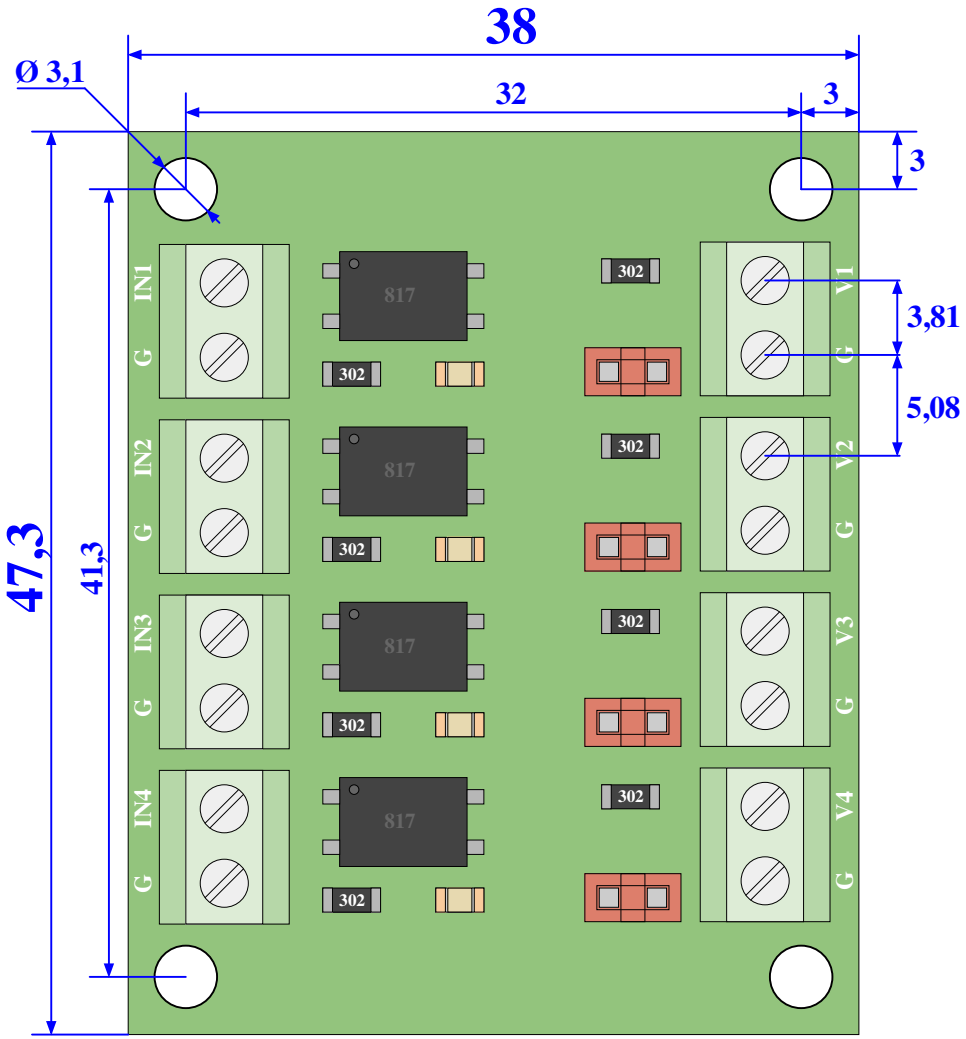
Unit: mm