EN: This Datasheet/Document is presented by the manufacturer.

Please visit our website for pricing and availability at www.hestore.hu.

GZT80

For RM84, RM85,
RM85 inrush,
RM85 105 °C sensitive,
RMB841, RMB851,
RM87L, RM87L sensitive,
RM87P, RM87P sensitive

Screw terminals
Max. tightening moment
for the terminal: 0,7 Nm
35 mm rail mount
acc. to PN-EN 60715
or on panel mounting
75,3 x 15,5 x 61(67) mm ❷
Two poles, 5 mm pinout
12 A, 300 V AC

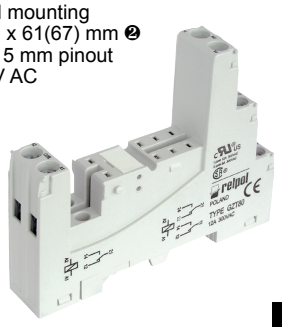

Connection diagrams ❸

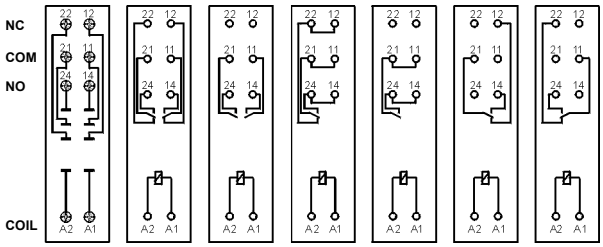

GZT80-0040

GZT80-0035

Module type M...

Accessories ❶

ZGGZ80

GZM80-0041

Dimensions

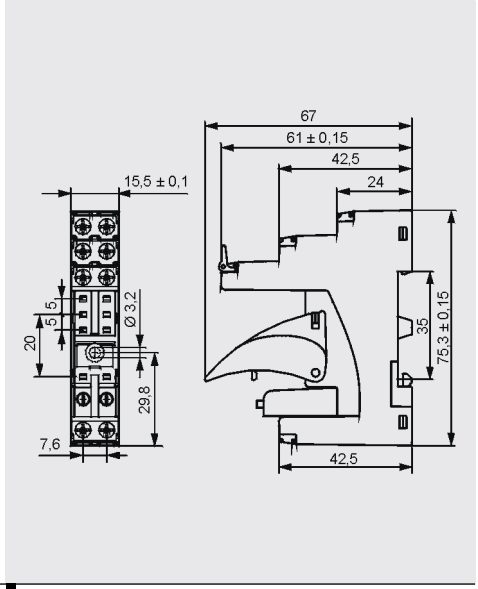

GZM80

For RM84, RM85,
RM85 inrush,
RM85 105 °C sensitive,
RMB841, RMB851,
RM87L, RM87L sensitive,
RM87P, RM87P sensitive

Screw terminals
Max. tightening moment
for the terminal: 0,7 Nm
35 mm rail mount
acc. to PN-EN 60715
or on panel mounting
78,1 x 15,9 x 61(66,5) mm ❷
Two poles, 5 mm pinout
12 A, 300 V AC

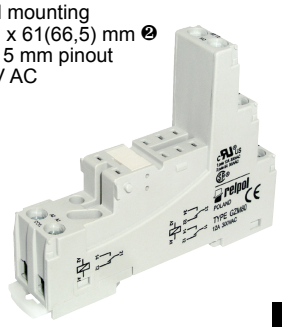

Connection diagrams ❸

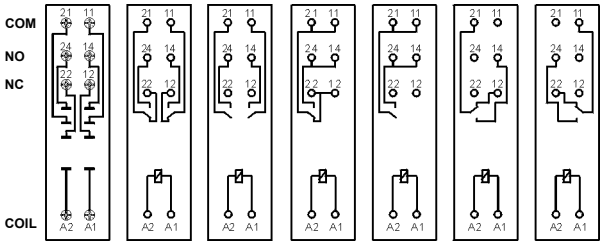

GZT80-0040

GZT80-0035

Module type M...

Accessories ❶

ZGGZ80

GZM80-0041

Dimensions

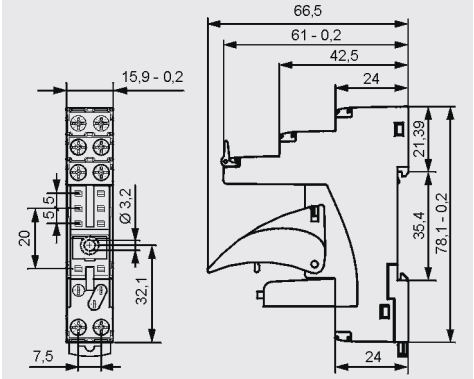

GZS80

For RM84, RM85,
RM85 inrush,
RM85 105 °C sensitive,
RMB841, RMB851,
RM87L, RM87L sensitive,
RM87P, RM87P sensitive

Screw terminals
Max. tightening moment
for the terminal: 0,5 Nm
35 mm rail mount
acc. to PN-EN 60715
or on panel mounting
76,8 x 15,8 x 42,5(57,1) mm ❷
Two poles, 5 mm pinout
10 A, 300 V AC

Connection diagrams ❸

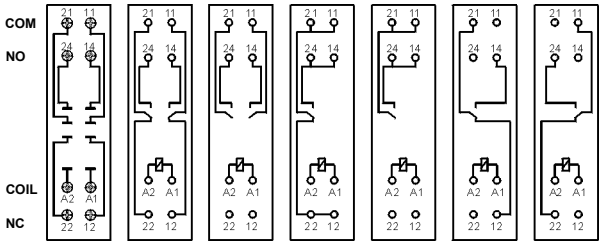

GZS-0040

TR

Module type M...

Accessories ❶

ZGGZ80

GZM80-0041

Dimensions

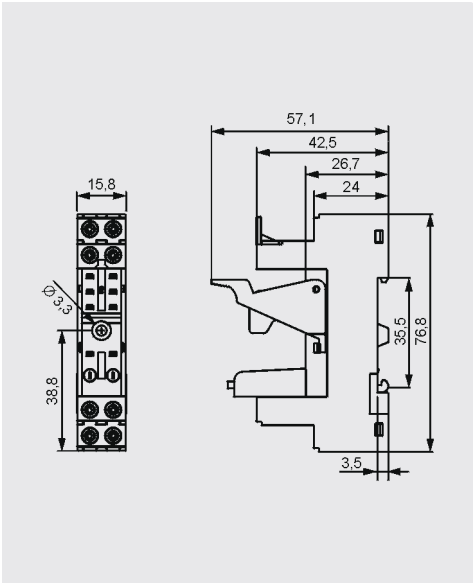

14.07.2014

❶ Mounting and sub-assemblies of accessories in the socket - see page 9. Signalling / protecting modules type M... - see page 20. ❷ In the bracket the height of socket with retainer / retractor clip is shown. ❸ For RM85, RM85 inrush, RM85 105 °C sensitive, RMB851: loads above 12 A (GZT80, GZM80) or 10 A (GZS80, GZMB80) require bridging pairs of terminals: 11 with 21, 12 with 22, 14 with 24 - see www.relpol.com.pl; For RMB841, RMB851 - see www.relpol.com.pl (energizing of bistable relays)

GZMB80

For RM84, RM85,
RM85 inrush,
RM85 105 °C sensitive,
RMB841, RMB851,
RM87L, RM87L sensitive,
RM87P, RM87P sensitive

Spring terminals
Max. cross section
of the cables:
1 x 0,2...1,5 mm²
(1 x 24...16 AWG)
Length of the cable
deinsulation: 9...11 mm

35 mm rail mount
acc. to PN-EN 60715
97 x 16 x 45,2(69) mm ❷
Two poles, 5 mm pinout
10 A, 300 V AC

Connection diagrams ❸

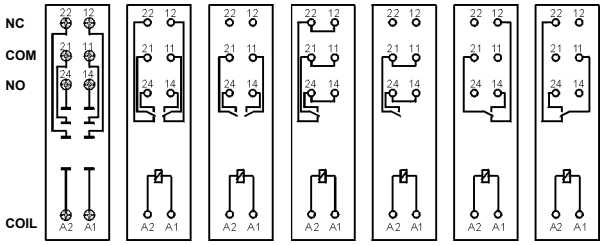

Dimensions

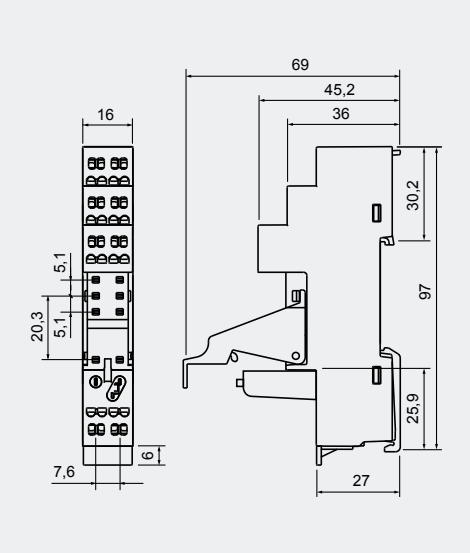

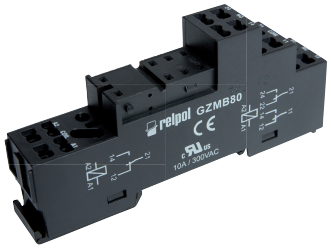

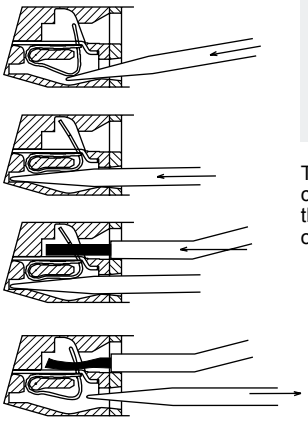

The drawings present the sequence of operations in course of inserting wires to the spring terminal, and the recommended screwdriver to be used for opening of case springs, comply with the DIN 5264 FORM „A".

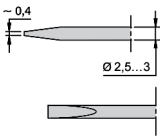

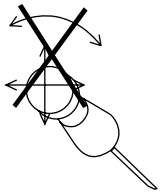

GZMB80-0040

TR

Module type M...

GZM80-0041

Accessories ❶

Wire connection

EC 50

For RM84, RM85, RM85 inrush,
RM85 105 °C sensitive,
RMB841, RMB851,
RM87L, RM87L sensitive,
RM87P, RM87P sensitive,
RM83, RM94

For PCB
31,3 x 12,7 x 9 mm
Two poles, 5 mm pinout
8 A, 300 V AC

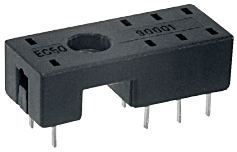

Pinout

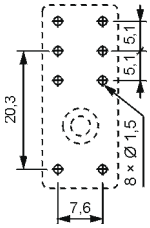

Dimensions

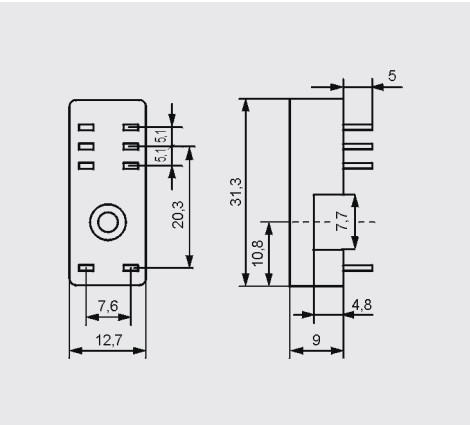

Accessories

MP25-2 MH25-2 RM81-0001

MP16-2 MH16-2 GD-0025

PW80

For RM84, RM85, RM85 inrush,
RM85 105 °C sensitive,
RMB841, RMB851,
RM87L, RM87L sensitive,
RM87P, RM87P sensitive,
RM83, RM94

For PCB
34,6 x 12,9 x 6,6 mm
Two poles, 5 mm pinout
8 A, 250 V AC

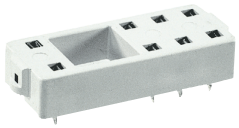

Pinout

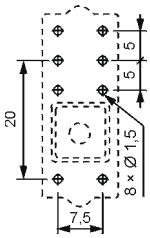

Dimensions

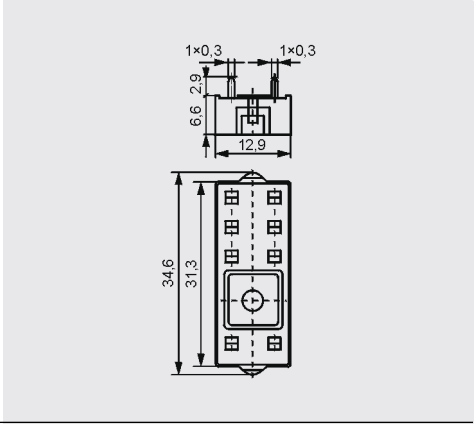

Accessories

MH25-2 RM81-0001

MH16-2 GD-0025

❶ Mounting and sub-assemblies of accessories in the socket - see page 9. Signalling / protecting modules type M... - see page 20. ❷ In the bracket the height of socket with retainer / retractor clip is shown. ❸ For RM85, RM85 inrush, RM85 105 °C sensitive, RMB851: loads above 12 A (GZT80, GZM80) or 10 A (GZS80, GZMB80) require bridging pairs of terminals: 11 with 21, 12 with 22, 14 with 24 - see www.relpol.com.pl; For RMB841, RMB851 - see www.relpol.com.pl (energizing of bistable relays)

GD50

For RM84, RM85, RM85 inrush,
RM85 105 °C sensitive,
RMB841, RMB851,
RM87L, RM87L sensitive,
RM87P, RM87P sensitive,
RM83, RM94

For PCB
31,5 x 13 x 9 mm
Two poles, 5 mm pinout
8 A, 300 V AC

Pinout

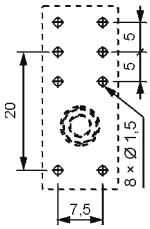

Accessories

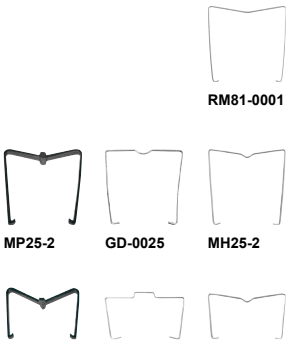

Dimensions

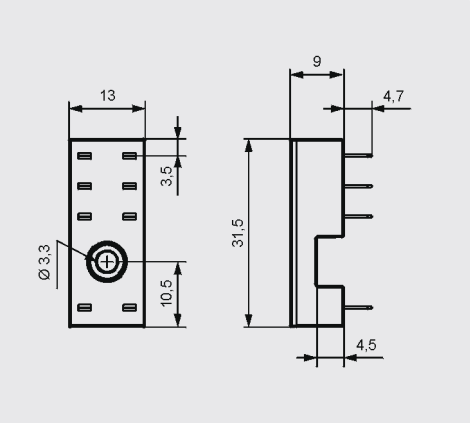

GZT92

For RM87N, RM87N sensitive

Screw terminals
Max. tightening moment
for the terminal: 0,7 Nm
35 mm rail mount
acc. to PN-EN 60715
or on panel mounting
75,3 x 15,5 x 61(67) mm ❷
One pole, 3,5 mm pinout
12 A, 300 V AC

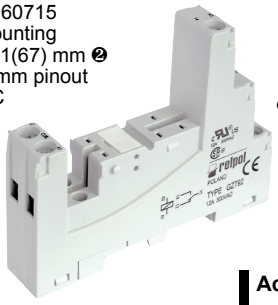

Connection diagrams

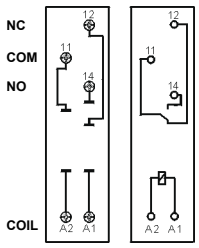

RM87N

Accessories ❶

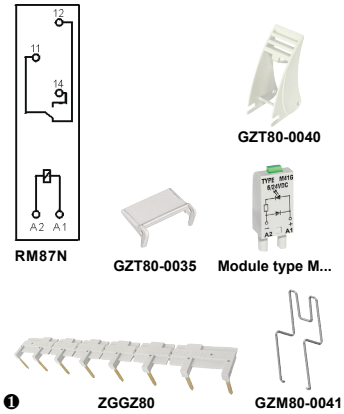

Dimensions

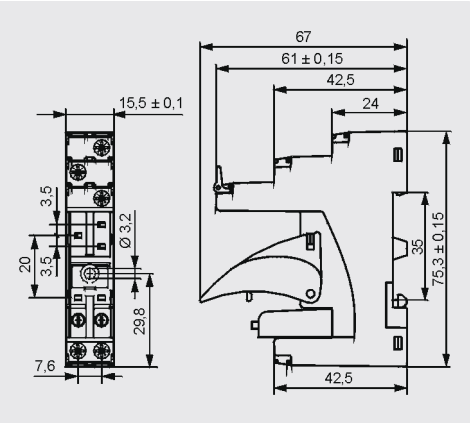

GZM92

For RM87N, RM87N sensitive

Screw terminals
Max. tightening moment
for the terminal: 0,7 Nm
35 mm rail mount
acc. to PN-EN 60715
or on panel mounting
78,1 x 15,9 x 61(66,5) mm ❷
One pole, 3,5 mm pinout
12 A, 300 V AC

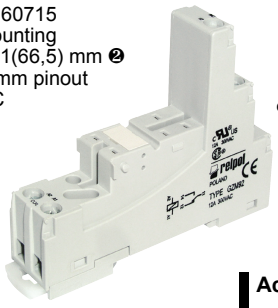

Connection diagrams

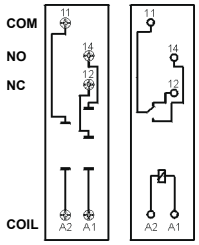

RM87N

Accessories ❶

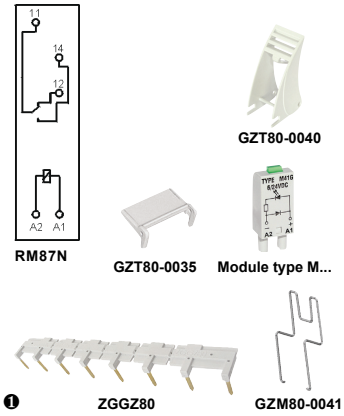

Dimensions

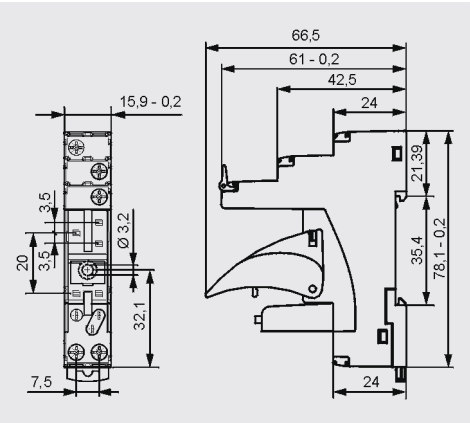

GZS92

For RM87N, RM87N sensitive

Screw terminals
Max. tightening moment
for the terminal: 0,5 Nm
35 mm rail mount
acc. to PN-EN 60715
or on panel mounting
76,8 x 15,8 x 42,5(57,1) mm ❷
One pole, 3,5 mm pinout
12 A, 300 V AC

Connection diagrams

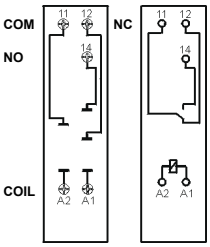

RM87N

Accessories ❶

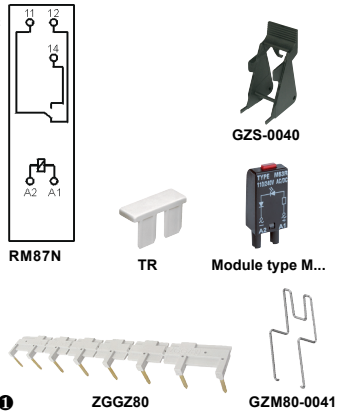

Dimensions

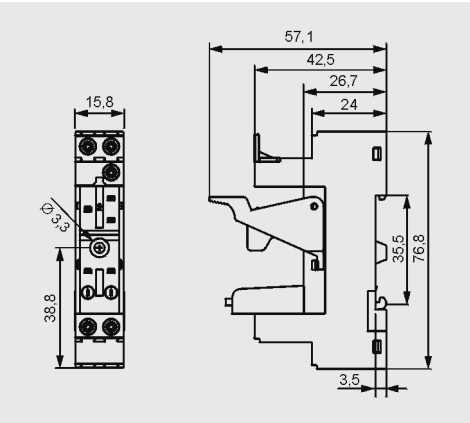

❶ Mounting and sub-assemblies of accessories in the socket - see page 9. Signalling / protecting modules type M... - see page 20.
❷ In the bracket the height of socket with retainer / retractor clip is shown.

14.07.2014

Export Sales Department phone +48 68 47 90 832, 951 • e-mail: export@relpol.com.pl

EC 35

For RM87N, RM87N sensitive, RM92

For PCB
31,3 x 12,7 x 9 mm
One pole, 3,5 mm pinout
12 A, 300 V AC

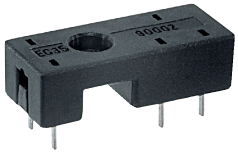

Pinout

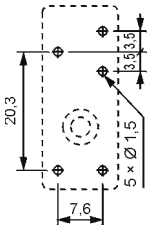

Accessories

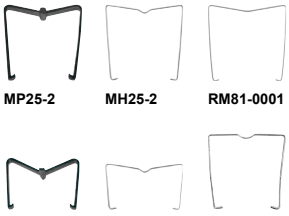

Dimensions

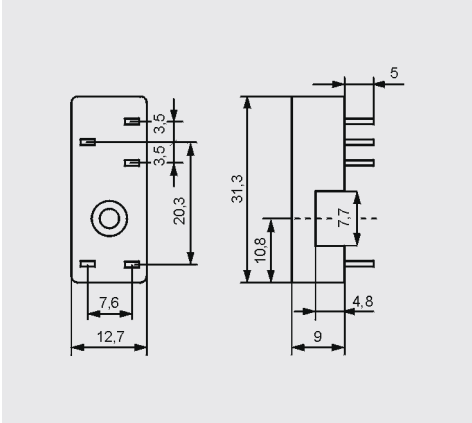

GD35

For RM87N, RM87N sensitive, RM92

For PCB
31,5 x 13 x 9 mm
One pole, 3,5 mm pinout
12 A, 300 V AC

Pinout

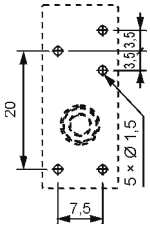

Accessories

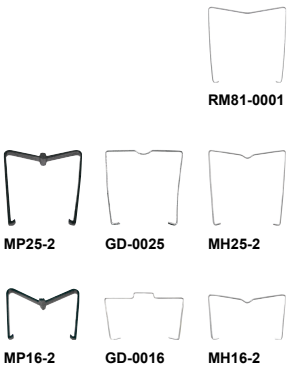

Dimensions

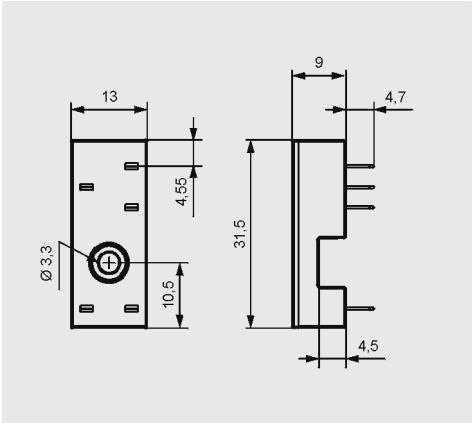

ES 32

For RM96 1 CO

Screw terminals
Max. tightening moment for the terminal: 0,7 Nm
35 mm rail mount acc. to PN-EN 60715 or on panel mounting
75 x 15,5 x 42,5(59) mm ❷
One pole, 3,2 mm pinout
12 A, 300 V AC

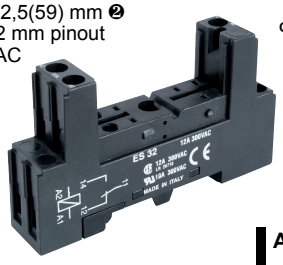

Connection diagrams

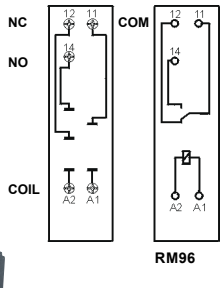

Accessories ❶

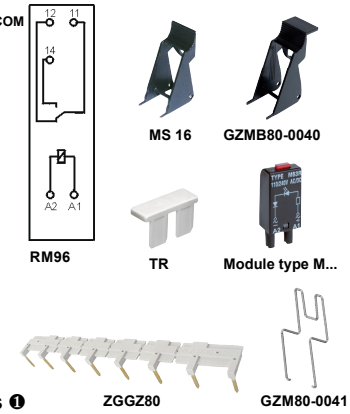

Dimensions

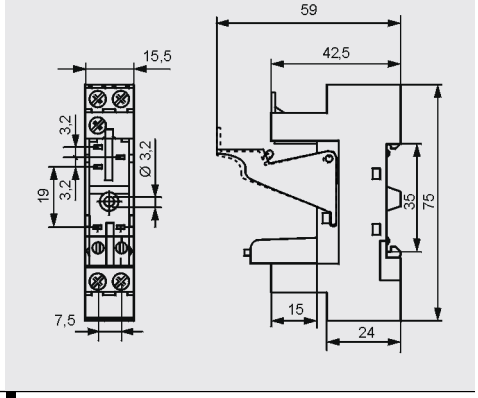

EC 32

For PCB
31 x 12,7 x 9 mm
One pole, 3,2 mm pinout
12 A, 300 V AC

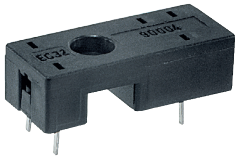

Pinout

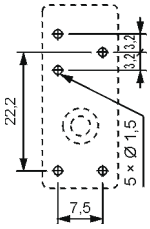

Accessories

Dimensions

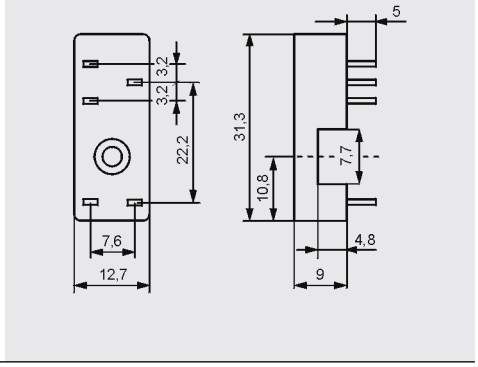

❶ Mounting and sub-assemblies of accessories in the socket - see page 9. Signalling / protecting modules type M... - see page 20.
❷ In the bracket the height of socket with retainer / retractor clip is shown.

GZT2

For R2N

Screw terminals
Max. tightening moment
for the terminal: 0,7 Nm
35 mm rail mount
acc. to PN-EN 60715
or on panel mounting
76,3 x 27 x 42,5(80) mm ❷
Two poles
12 A, 300 V AC

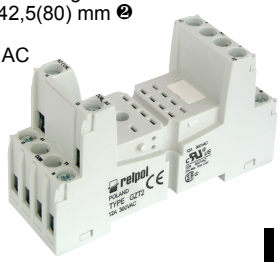

Connection diagram

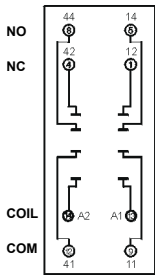

Accessories ❶

ZGGZ4

GZT4-0040

G4 1052

GZT4-0035

Module type M...

Dimensions

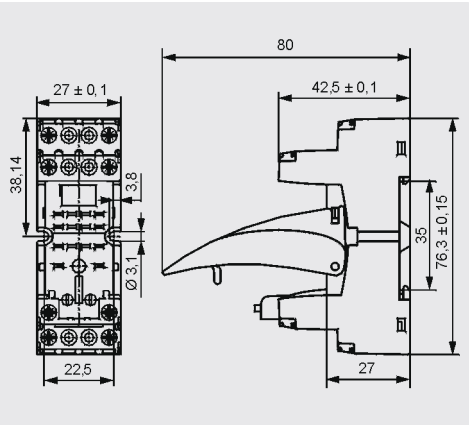

GZM2

For R2N

Screw terminals
Max. tightening moment
for the terminal: 0,7 Nm
35 mm rail mount
acc. to PN-EN 60715
or on panel mounting
75 x 27 x 61(82) mm ❷
Two poles
12 A, 300 V AC

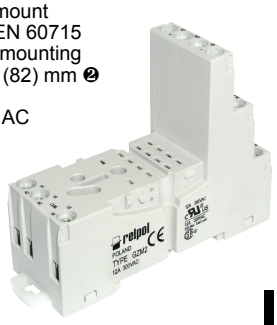

Connection diagram

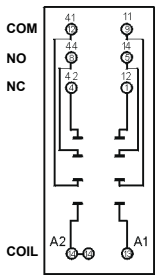

Accessories ❶

ZGGZ4

GZT4-0040

G4 1052

GZT4-0035

Module type M...

Dimensions

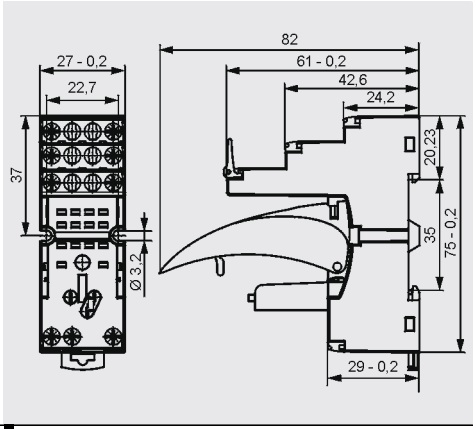

GZMB2

For R2N

Spring terminals
Max. cross section of the cables:
1 x 0,2...1,5 mm²
(1 x 24...16 AWG)
Length of the cable deinsulation:
9...11 mm

35 mm rail mount
acc. to PN-EN 60715
95 x 31 x 42,5(80) mm ❷
Two poles
10 A, 300 V AC

Connection diagram

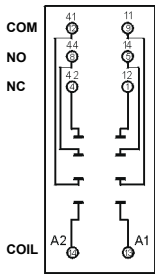

Accessories ❶

GZMB4-0040

TR

Module type M...

G4 1052

Dimensions

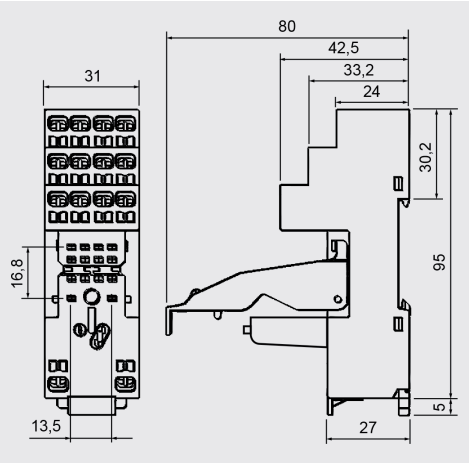

Wire connection

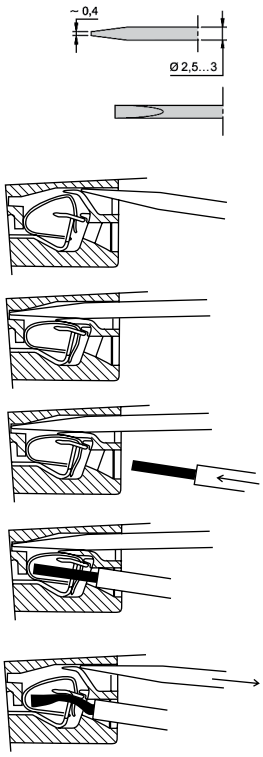

The drawings present the sequence of operations in course of inserting wires to the spring terminal, and the recommended screwdriver to be used for opening of case springs, comply with the DIN 5264 FORM „A".

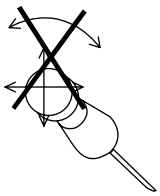

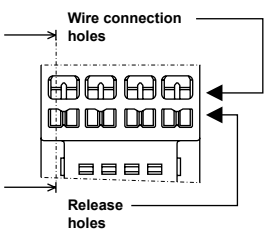

14.07.2014

❶ Mounting and sub-assemblies of accessories in the socket - see page 9. Signalling / protecting modules type M... - see page 20.
❷ In the bracket the height of socket with retainer / retractor clip is shown.

Export Sales Department phone +48 68 47 90 832, 951 • e-mail: export@relpol.com.pl

SU4/2D

For R2N

For PCB
29,6 x 21,5 x 11 mm
Two poles
12 A, 250 V AC

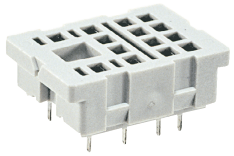

Pinout

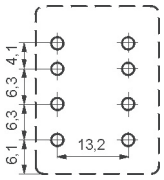

Accessories G4 1053

Dimensions

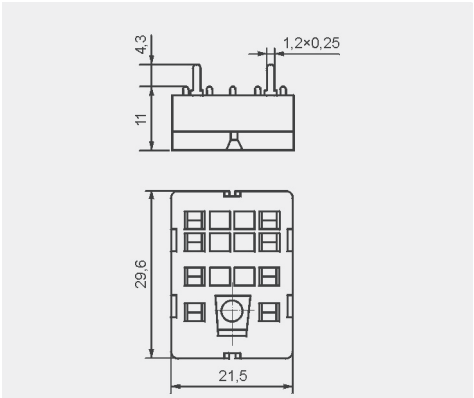

SU4/2L

For R2N

Solder terminals
29,6 x 21,5 x 18,1 mm
Two poles
12 A, 250 V AC

Dimensions of opening on panel mounting

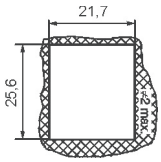

Accessories G4 1053 G4 1040

Dimensions

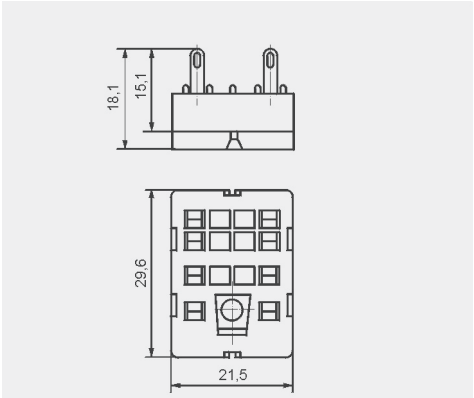

G4/2

For R2N

Solder terminals
40,5 x 21,5 x 18,1 mm
Two poles
12 A, 250 V AC

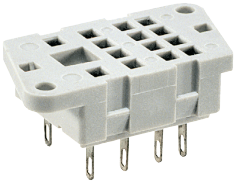

Pinout of openings on panel mounting

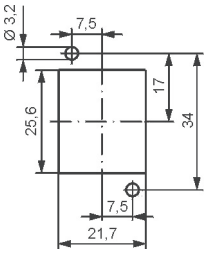

Accessories G4 1053

Dimensions

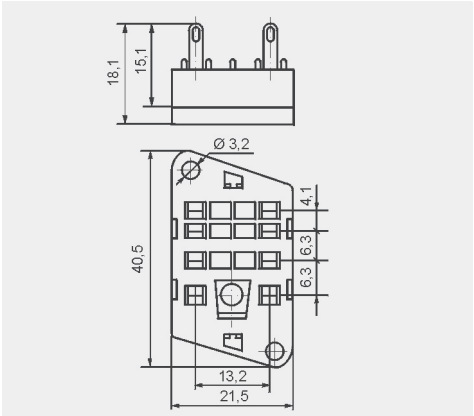

GZT3

For R3N

Screw terminals
Max. tightening moment
for the terminal: 0,7 Nm
35 mm rail mount
acc. to PN-EN 60715
or on panel mounting
76,3 x 27 x 42,5(80) mm ❷
Three poles
10 A, 300 V AC

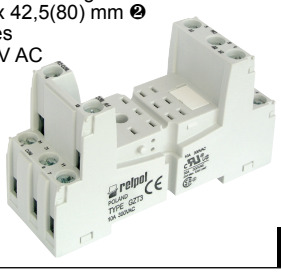

Connection diagram

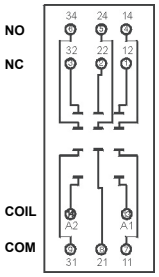

ZGGZ4

GZT4-0040

G4 1052

Accessories ❶

GZT4-0035

Module type M...

Dimensions

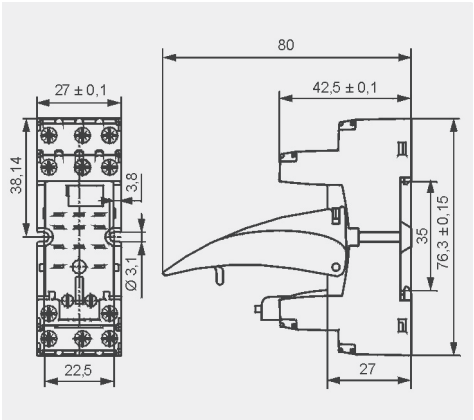

❶ Mounting and sub-assemblies of accessories in the socket - see page 9. Signalling / protecting modules type M... - see page 20.
❷ In the bracket the height of socket with retainer / retractor clip is shown.

14.07.2014

Export Sales Department phone +48 68 47 90 832, 951 • e-mail: export@relpol.com.pl

GZM3

For R3N

Screw terminals
Max. tightening moment
for the terminal: 0,7 Nm
35 mm rail mount
acc. to PN-EN 60715
or on panel mounting
75 x 27 x 61(82) mm ❷
Three poles
10 A, 300 V AC

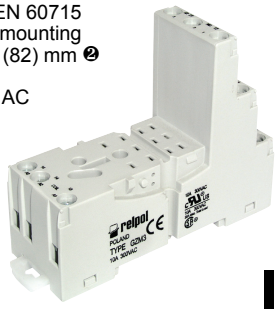

Connection diagram

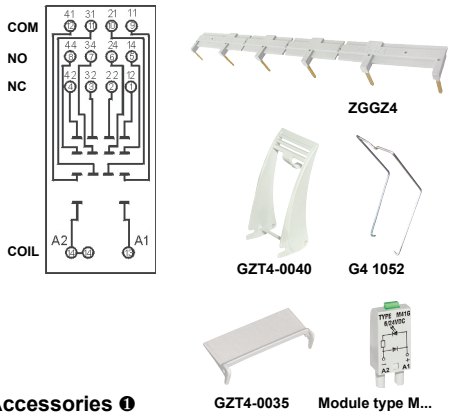

Accessories ❶

Dimensions

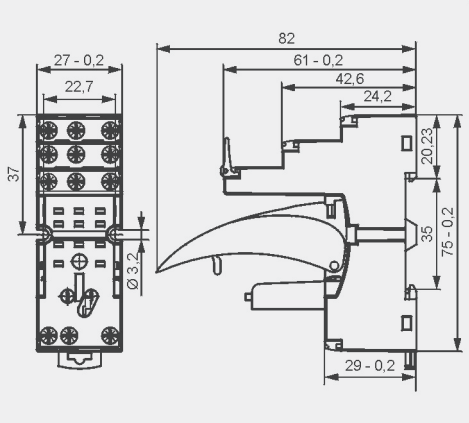

GZT4 ❹

For R4N, T-R4

Screw terminals
Max. tightening moment
for the terminal: 0,7 Nm
35 mm rail mount
acc. to PN-EN 60715
or on panel mounting
76,3 x 27 x 42,5(80) mm ❷
Four poles
6 A, 300 V AC

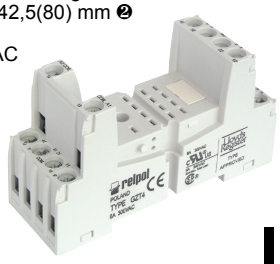

Connection diagram

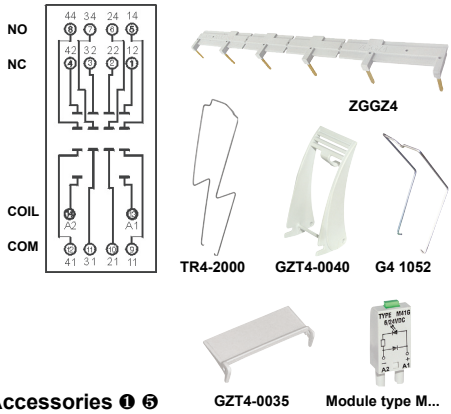

Accessories ❶ ❺

Dimensions

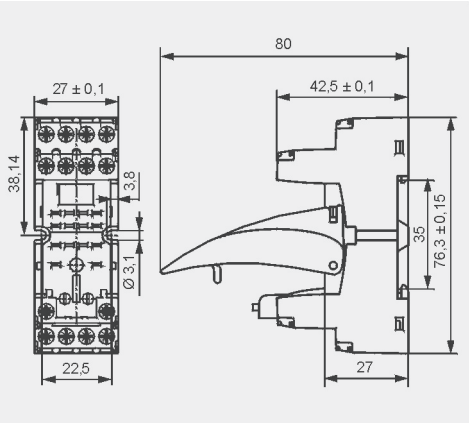

GZM4

For R4N, T-R4

Screw terminals
Max. tightening moment
for the terminal: 0,7 Nm
35 mm rail mount
acc. to PN-EN 60715
or on panel mounting
75 x 27 x 61(82) mm ❷
Four poles
6 A, 300 V AC

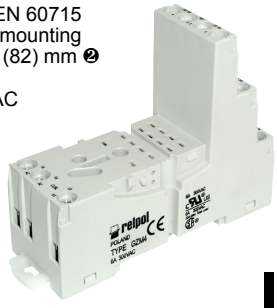

Connection diagram

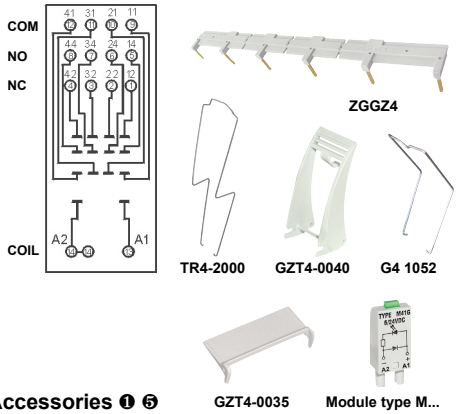

Accessories ❶ ❺

Dimensions

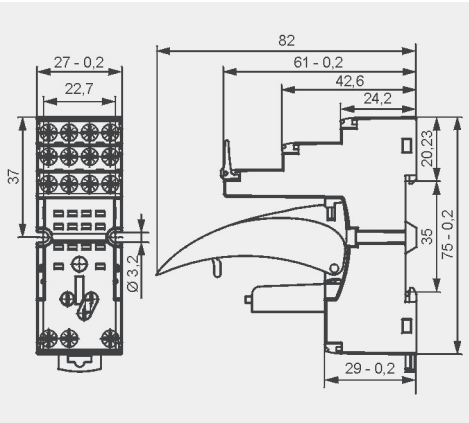

GZ4

For R4N

Screw terminals
Max. tightening moment
for the terminal: 0,7 Nm
35 mm rail mount
acc. to PN-EN 60715
or on panel mounting
66,4 x 29,5 x 29 mm
Four poles
10 A, 300 V AC

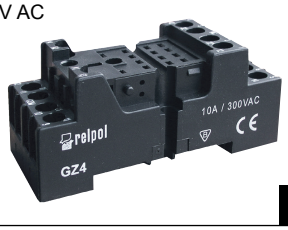

Connection diagram

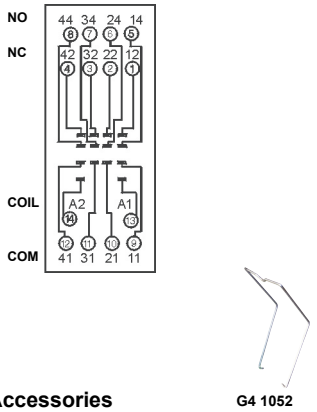

Accessories

Dimensions

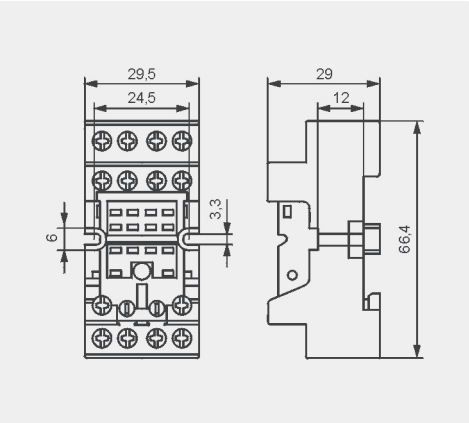

❶ Mounting and sub-assemblies of accessories in the socket - see page 9. Signalling / protecting modules type M... - see page 20. ❷ In the bracket the height of socket with retainer / retractor clip is shown. ❹ Have obtained LR Type Approval Certificate (Lloyd's Register). ❺ For R4 relays: G4 1052, GZT4-0040, GZMB-0040, GZT4-0035, TR, module type M...; for T-R4 relays: TR4-2000, GZT4-0035, TR

14.07.2014

Export Sales Department phone +48 68 47 90 832, 951 • e-mail: export@relpol.com.pl

GS4

For R4N

Screw terminals
Max. tightening moment
for the terminal: 0,7 Nm
35 mm rail mount
acc. to PN-EN 60715
or on panel mounting
67 x 30,8 x 30(~63,7) mm ❻
Four poles
6 A, 300 V AC

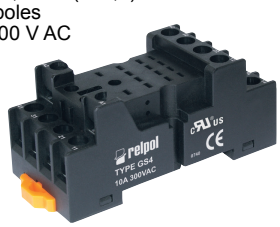

Connection diagram

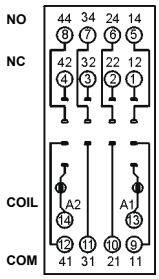

Dimensions

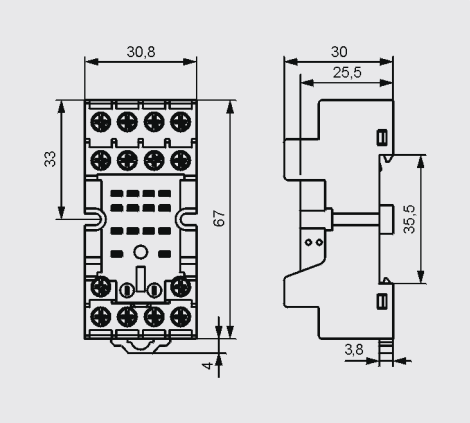

Accessories

GS4-0036

GS4-0035

GZMB4

For R4N, T-R4

Spring terminals
Max. cross section of the cables:
1 x 0,2...1,5 mm²
(1 x 24...16 AWG)
Length of the cable deinsulation:
9...11 mm

35 mm rail mount
acc. to PN-EN 60715
95 x 31 x 42,5(80) mm ❷
Four poles
10 A, 300 V AC

Connection diagram

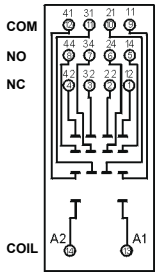

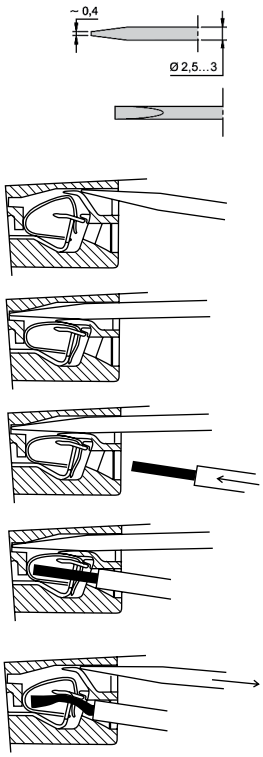

Dimensions

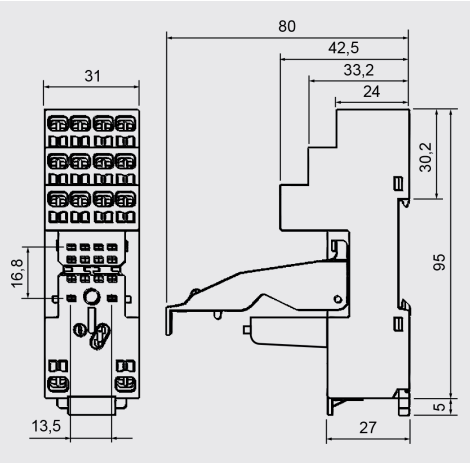

The drawings present the sequence of operations in course of inserting wires to the spring terminal, and the recommended screwdriver to be used for opening of case springs, comply with the DIN 5264 FORM „A".

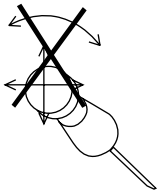

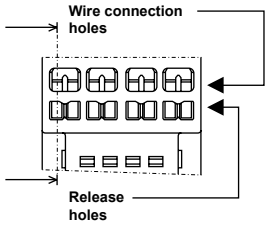

Accessories ❶ ❺

GZMB4-0040

TR

Module type M...

G4 1052

TR4-2000

Wire connection

SU4D

For R4N

For PCB
29,6 x 21,5 x 11 mm
Four poles
6 A, 250 V AC

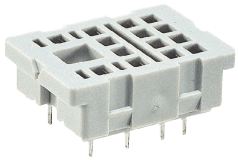

Pinout

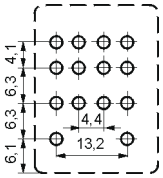

Dimensions

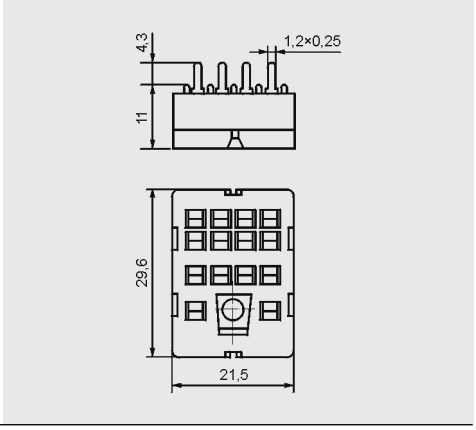

Accessories

G4 1053

❶ Mounting and sub-assemblies of accessories in the socket - see page 9. Signalling / protecting modules type M... - see page 20. ❷ In the bracket the height of socket with retainer / retractor clip is shown. ❺ For R4N relays: G4 1052, GZT4-0040, GZMB-0040, GZT4-0035, TR, module type M...; for T-R4 relays: TR4-2000, GZT4-0035, TR ❻ In the bracket the height of socket with spring wire clip is shown.

SU4L

For R4N

Solder terminals
29,6 x 21,5 x 18,1 mm
Four poles
6 A, 250 V AC

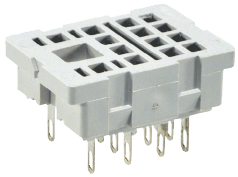

Dimensions of opening on panel mounting

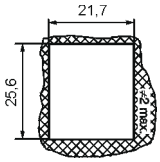

Accessories

G4 1053

G4 1040

Dimensions

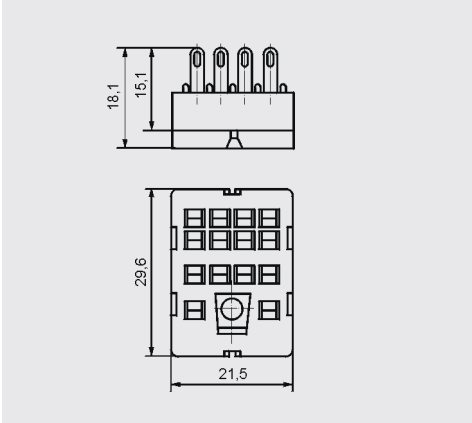

G4

For R4N

Solder terminals
40,5 x 21,5 x 18,1 mm
Four poles
6 A, 250 V AC

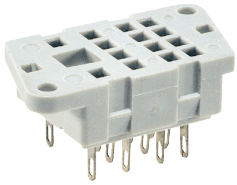

Pinout of openings on panel mounting

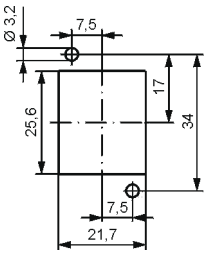

Accessories

G4 1053

Dimensions

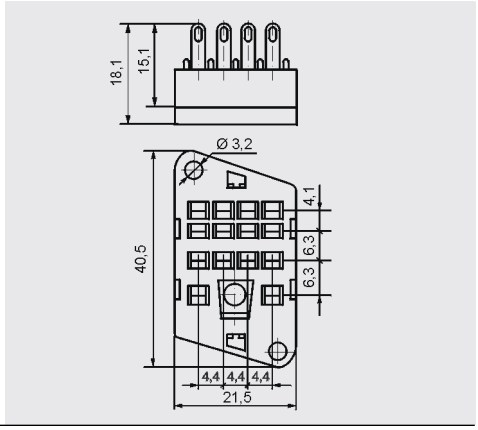

Mounting and sub-assemblies of the relay and accessories in the socket

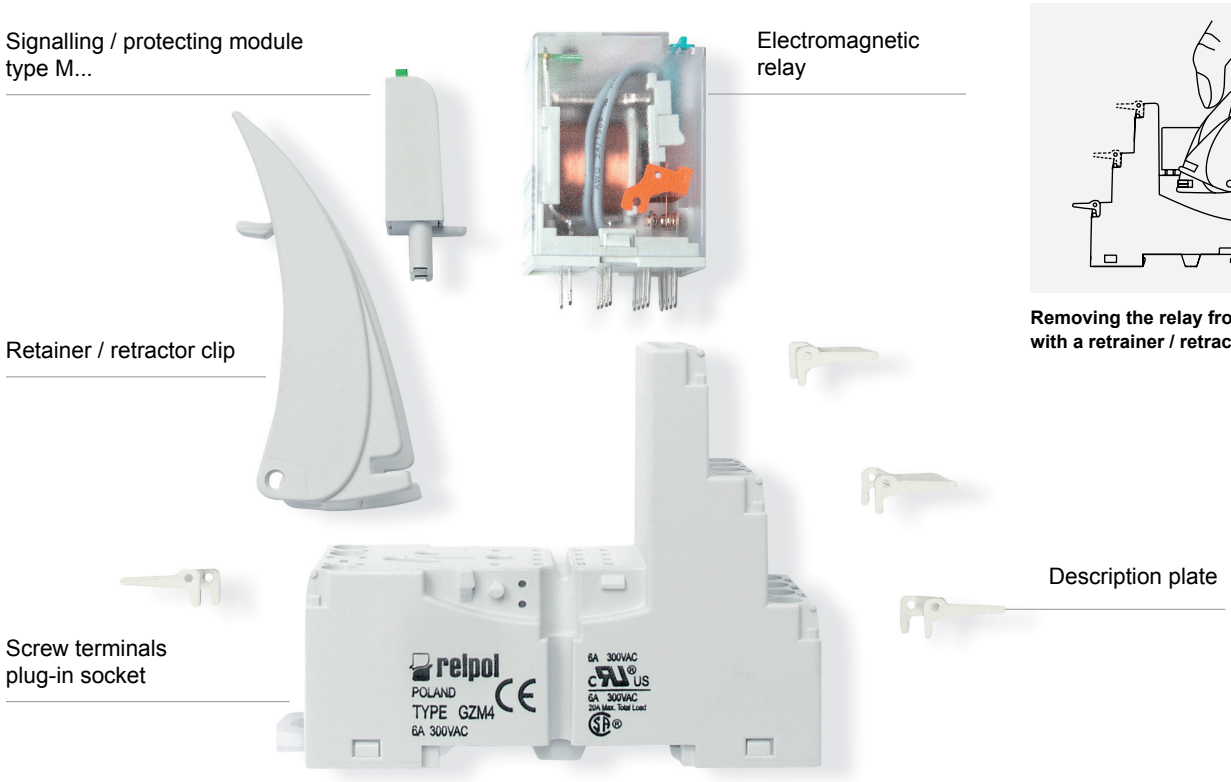

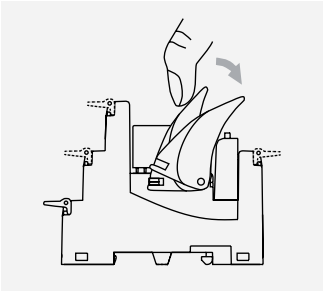

Removing the relay from the socket with a retrainer / retractor clip

14.07.2014

GZY2G

For RY2

Screw terminals
Max. tightening moment
for the terminal: 0,7 Nm
35 mm rail mount
acc. to PN-EN 60715
or on panel mounting
78,7 x 28 x 32,4 mm
Two poles
12 A, 250 V AC

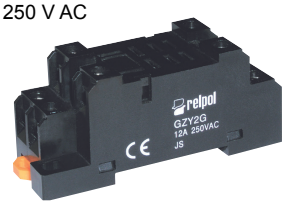

Connection diagram

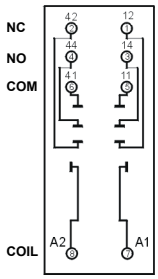

Dimensions

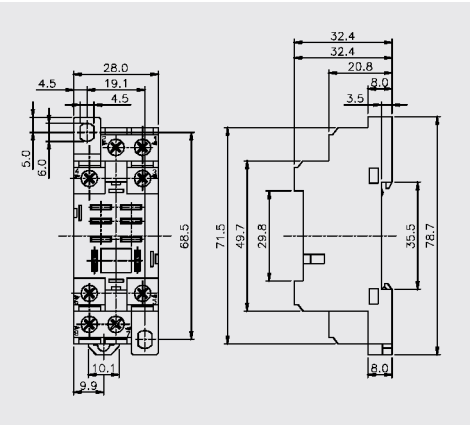

Accessories

GZY2G-0041

GZ2

For R2M

Screw terminals
Max. tightening moment
for the terminal: 0,7 Nm
35 mm rail mount
acc. to PN-EN 60715
or on panel mounting
65,2 x 20 x 25 mm
Two poles
7 A, 250 V AC

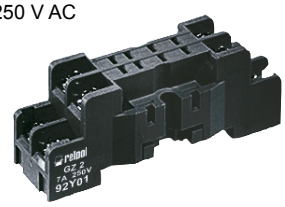

Connection diagram

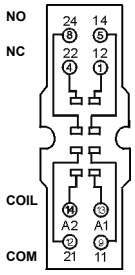

Dimensions

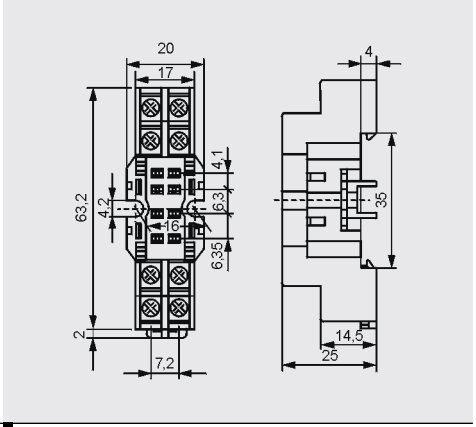

Accessories

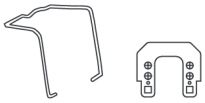

GZ2 1060 GZ2 1111

S2M

For R2M

For PCB
29,6 x 14 x 10,5 mm
Two poles
5 A, 250 V AC

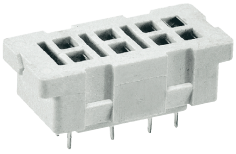

Pinout

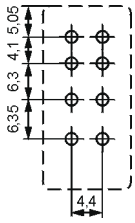

Dimensions

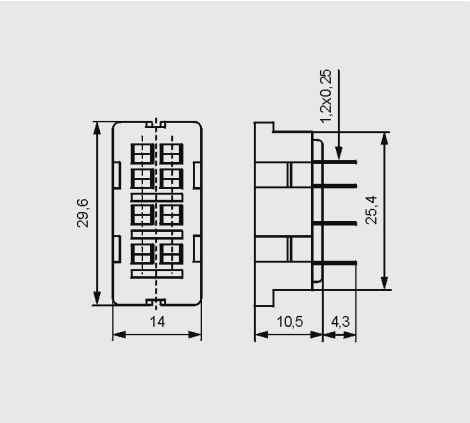

Accessories

G4 1050

G2M

For R2M

Solder terminals
40,5 x 14 x 10,5 mm
Two poles
5 A, 250 V AC

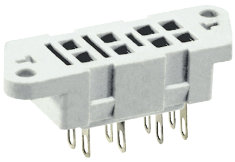

Dimensions

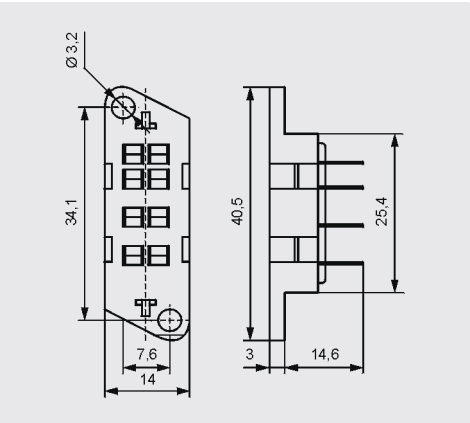

Accessories

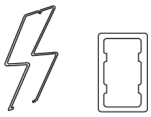

G4 1050 G2M 1020

14.07.2014

PZ8 ❹

For R15 - 2 CO

Screw terminals
Max. tightening moment
for the terminal: 0,7 Nm
35 mm rail mount
acc. to PN-EN 60715
or on panel mounting
68,2 x 38 x 24,2 mm
Two poles
10 A, 250 V AC

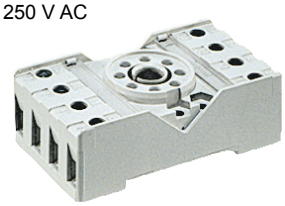

Connection diagram

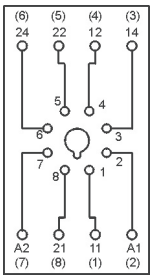

Accessories

PZ11 0031

Dimensions

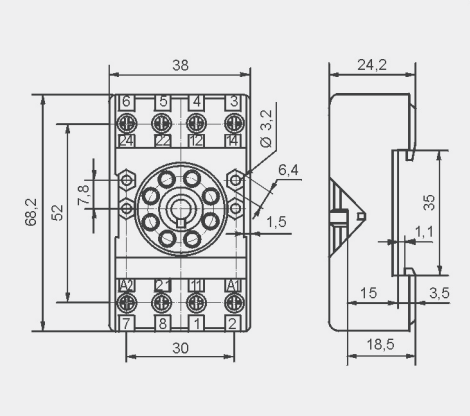

GZU8

For R15 - 2 CO

Screw terminals
Max. tightening moment
for the terminal: 0,7 Nm
35 mm rail mount
acc. to PN-EN 60715
82 x 35,5 x 25,7 mm
Two poles
10 A, 300 V AC

Connection diagram

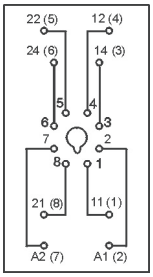

Adaptor

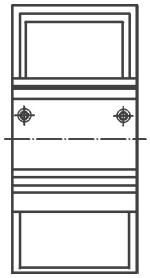

Accessories

GZU 1052

Dimensions

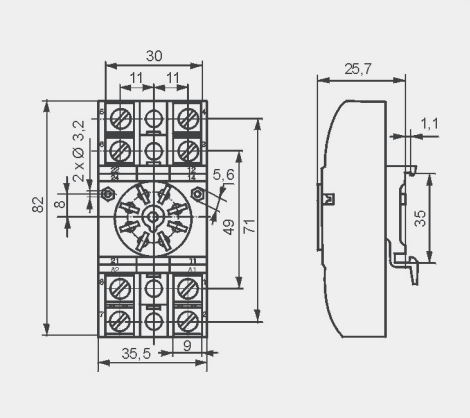

GZ8

For R15 - 2 CO

Screw terminals
Max. tightening moment
for the terminal: 0,7 Nm
On panel mounting
82,8 x 35,5 x 22,5 mm
Two poles
10 A, 300 V AC

Connection diagram

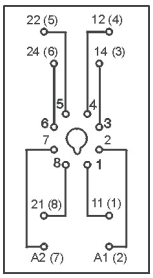

Mounting dimensions

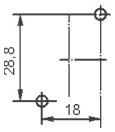

Accessories

GZ 1050

Dimensions

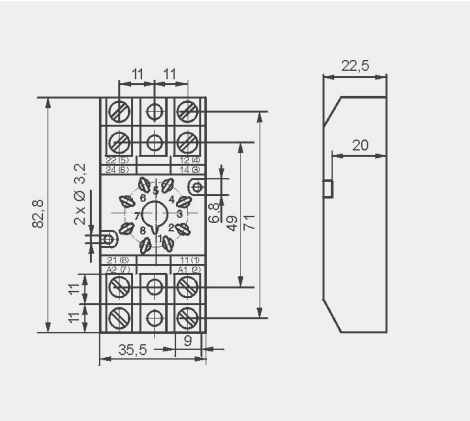

GZS8

For R15 - 2 CO

Screw terminals
Max. tightening moment
for the terminal: 1,0 Nm
35 mm rail mount
acc. to PN-EN 60715
or on panel mounting
51,3 x 40,8 x 21 mm
Two poles
10 A, 300 V AC

Connection diagram

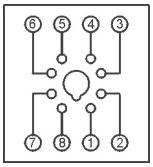

Dimensions

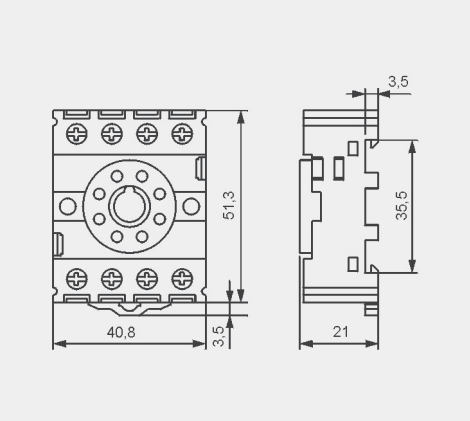

❹ Have obtained LR Type Approval Certificate (Lloyd's Register).

14.07.2014

GZP8

For R15 - 2 CO

Screw terminals
Max. tightening moment
for the terminal: 0,5 Nm
35 mm rail mount
acc. to PN-EN 60715
or on panel mounting
73 x 38,2 x 27,2 mm
Two poles
12 A, 300 V AC

Connection diagram

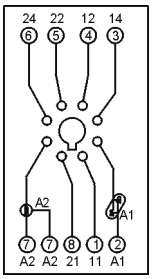

Time module COM3

Accessories

GZP-0054

GZP-0035

Dimensions

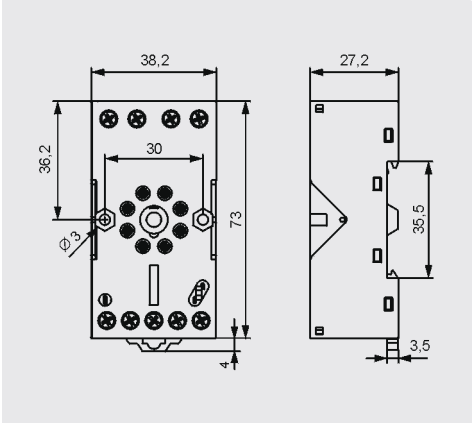

GOP8

For R15 - 2 CO

Solder terminals
47,2 x 32 x 22 mm
Two poles
10 A, 250 V AC

Accessories

R159 1051

R15 5922

Dimensions

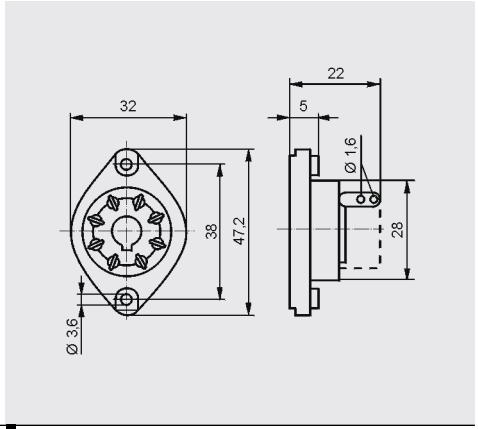

PS11 ❹

For R15 - 3 CO

Screw terminals
Max. tightening moment
for the terminal: 0,7 Nm
35 mm rail mount
acc. to PN-EN 60715
or on panel mounting
68,2 x 38 x 24,2 mm
Three poles
10 A, 250 V AC

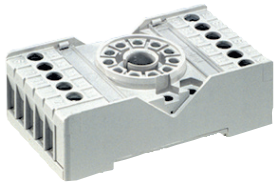

Connection diagram

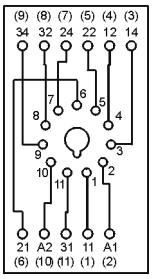

Accessories

PZ11 0031

Dimensions

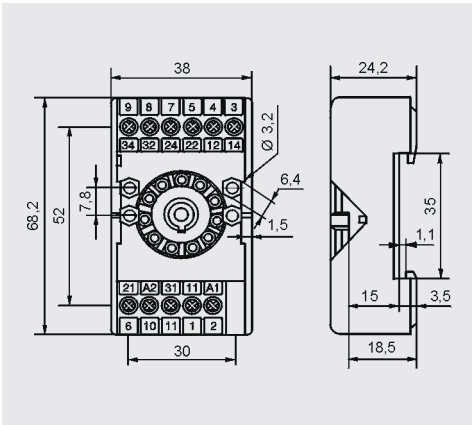

PZ11 ❹

For R15 - 3 CO

Screw terminals
Max. tightening moment
for the terminal: 0,7 Nm
35 mm rail mount
acc. to PN-EN 60715
or on panel mounting
68,2 x 38 x 24,2 mm
Three poles
10 A, 250 V AC

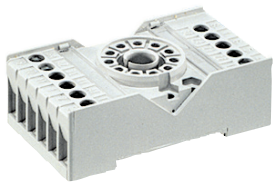

Connection diagram

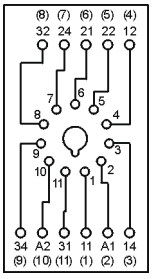

Accessories

PZ11 0031

Dimensions

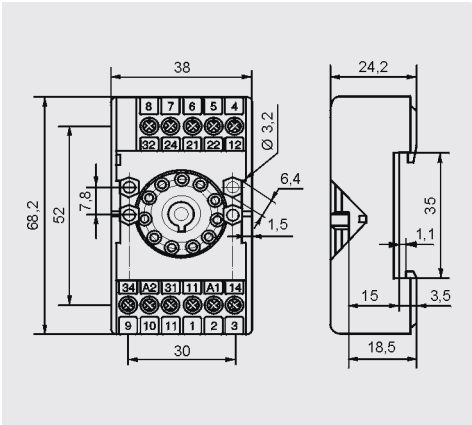

❹ Have obtained LR Type Approval Certificate (Lloyd's Register).

14.07.2014

GZU11

For R15 - 3 CO

Screw terminals
Max. tightening moment
for the terminal: 0,7 Nm
35 mm rail mount
acc. to PN-EN 60715
82 x 35,5 x 25,7 mm
Three poles
10 A, 250 V AC

Connection diagram

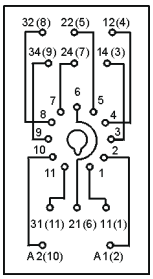

Adaptor

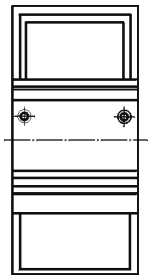

Dimensions

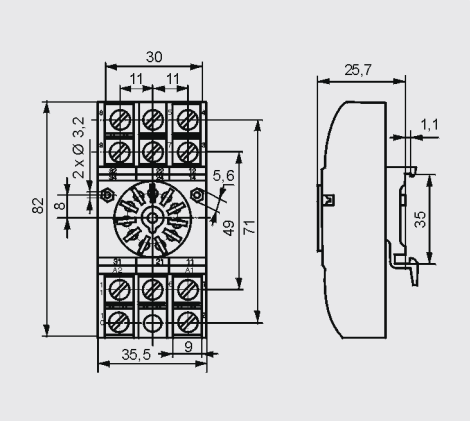

Accessories

GZU 1052

GZ11

For R15 - 3 CO

Screw terminals
Max. tightening moment
for the terminal: 0,7 Nm
On panel mounting
82,8 x 35,5 x 22,5 mm
Three poles
10 A, 250 V AC

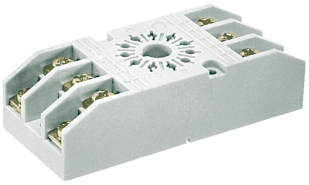

Connection diagram

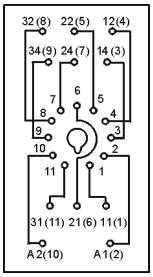

Mounting dimensions

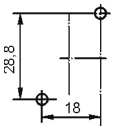

Dimensions

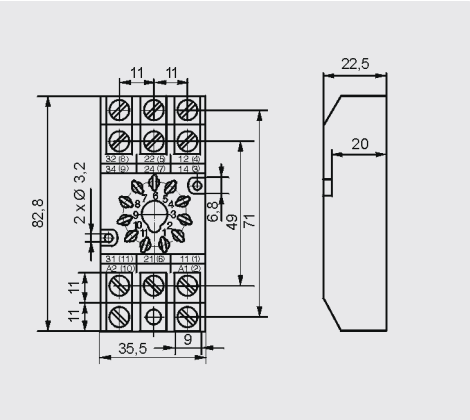

Accessories

GZ 1050

GZS11

For R15 - 3 CO

Screw terminals
Max. tightening moment
for the terminal: 1,0 Nm
35 mm rail mount
acc. to PN-EN 60715
or on panel mounting
51,3 x 43 x 30 mm
Three poles
10 A, 300 V AC

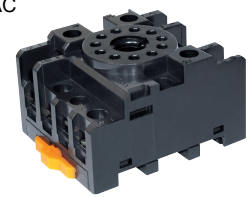

Connection diagram

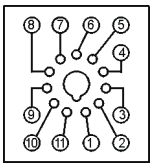

Dimensions

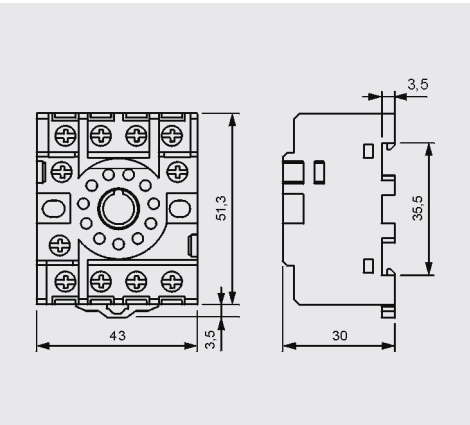

GZP11

For R15 - 3 CO

Screw terminals
Max. tightening moment
for the terminal: 0,5 Nm
35 mm rail mount
acc. to PN-EN 60715
or on panel mounting
73 x 38,2 x 27,2 mm
Three poles
12 A, 300 V AC

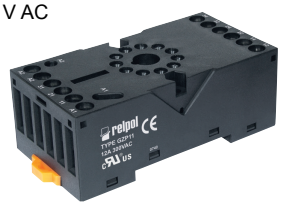

Connection diagram

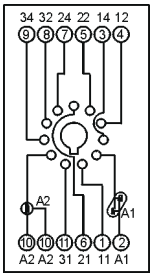

Dimensions

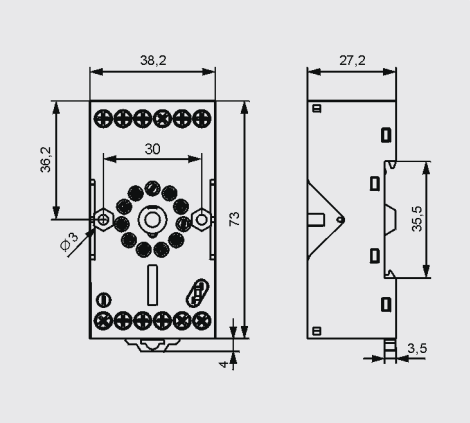

Accessories

GZP-0054

Time module COM3

GZP-0035

14.07.2014

GOP11

For R15 - 3 CO

Solder terminals
47,2 x 32 x 22 mm
Three poles
10 A, 250 V AC

Accessories

R159 1051

R15 5922

Dimensions

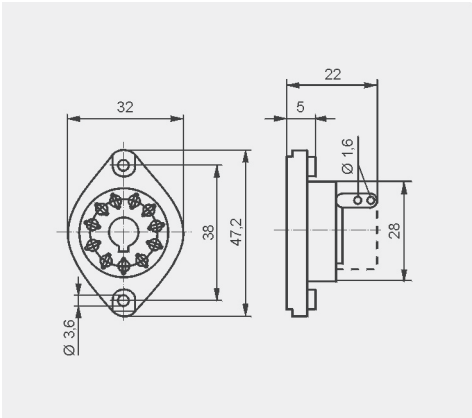

GZ14U

For R15 - 4 CO

Screw terminals
Max. tightening moment
for the terminal: 0,7 Nm
35 mm rail mount
acc. to PN-EN 60715
96,8 x 46,4 x 33,3 mm
Four poles
10 A, 250 V AC

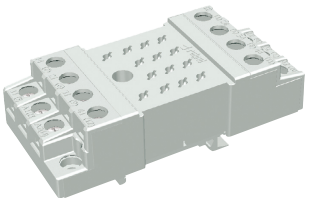

Connection diagram

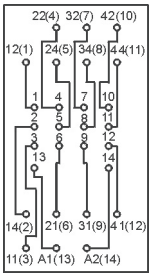

Adaptor

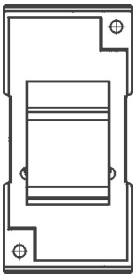

Accessories

GZ14 0737

Dimensions

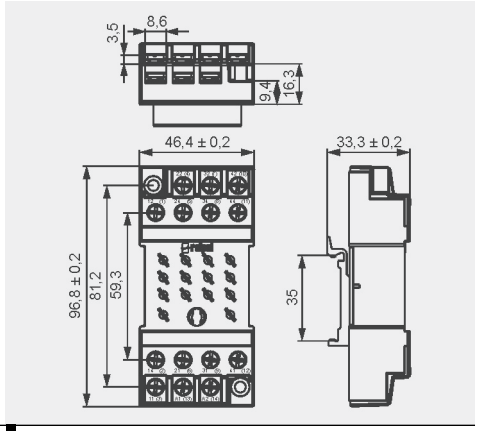

GZ14

For R15 - 4 CO

Screw terminals
Max. tightening moment
for the terminal: 0,7 Nm
On panel mounting
96,8 x 46,4 x 24,5 mm
Four poles
10 A, 250 V AC

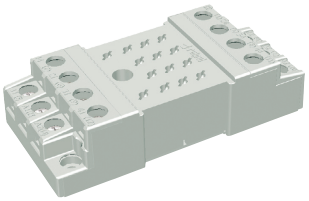

Connection diagram

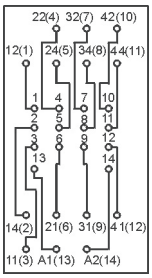

Mounting dimensions

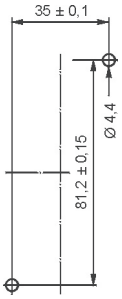

Accessories

GZ14 0737

Dimensions

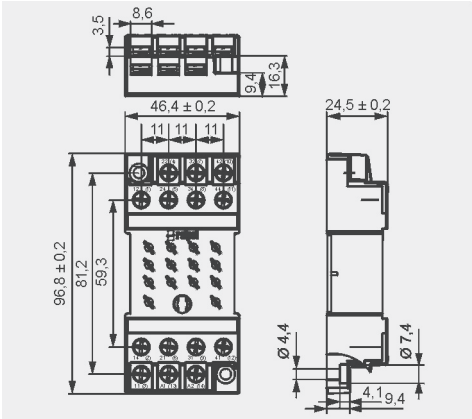

GOP14

For R15 - 4 CO

Solder terminals
50 x 42 x 23 mm
Four poles
10 A, 250 V AC

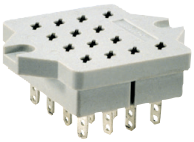

Accessories

R15 0736

R15 5922

Dimensions

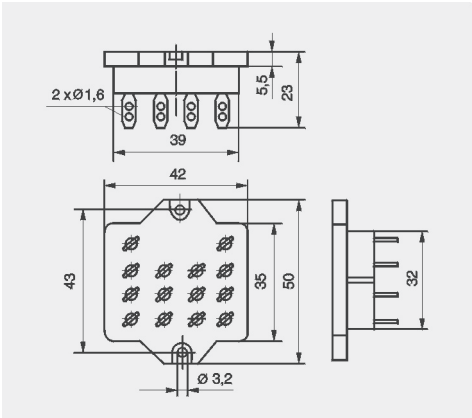

14.07.2014

GZ14Z

For R15 - 4 CO

Screw terminals
Max. tightening moment
for the terminal: 0,7 Nm
On panel mounting, behind
92,2 x 46 x 23 mm
Four poles
10 A, 250 V AC

Connection diagram

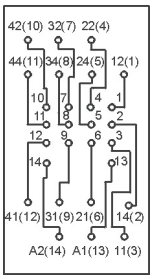

Mounting dimensions

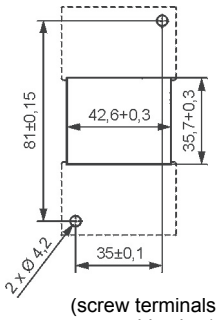

(screw terminals side view)

Dimensions

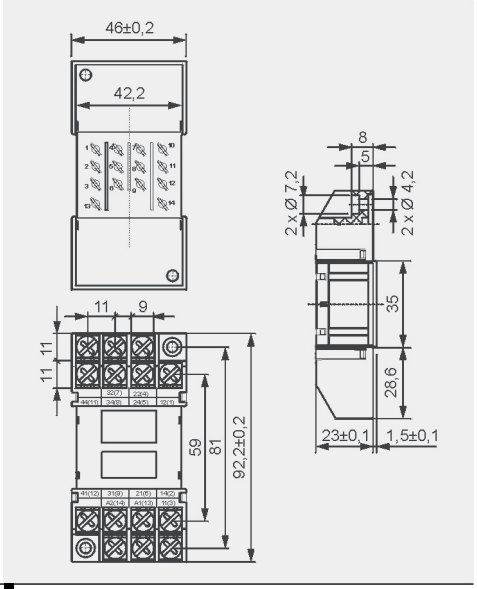

Accessories

GZ14 0737

GUC11 ❼

For RUC faston 4,8x0,5, RUC-M

Screw terminals
Max. tightening moment
for the terminal: 0,7 Nm
35 mm rail mount
acc. to PN-EN 60715
or on panel mounting
82 x 42,2 x 26,5 mm
Three poles
16 A, 250 V AC

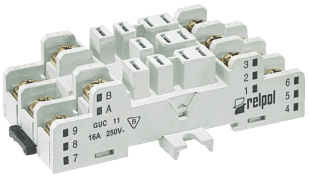

Connection diagram

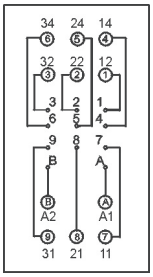

Dimensions

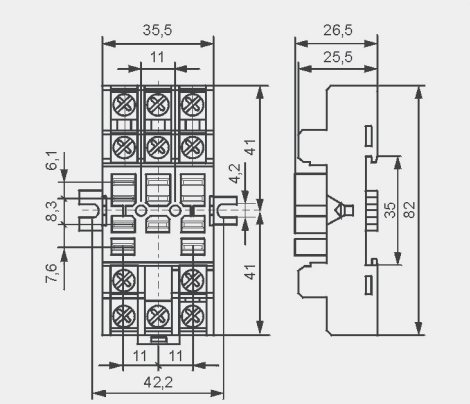

Accessories

MBA

PI6W-1P

For RM699BV, RSR30 ❽

Screw terminals
Max. tightening moment
for the terminal: 0,3 Nm
35 mm rail mount
acc. to PN-EN 60715
98,5 x 6,2 x 85,5 mm
One pole
6 A, 250 V AC

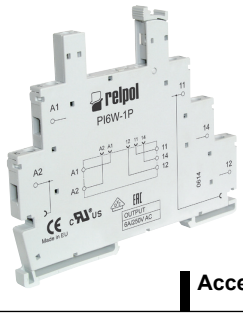

Connection diagram

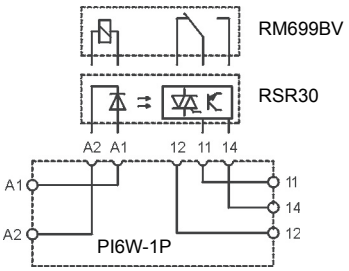

Dimensions

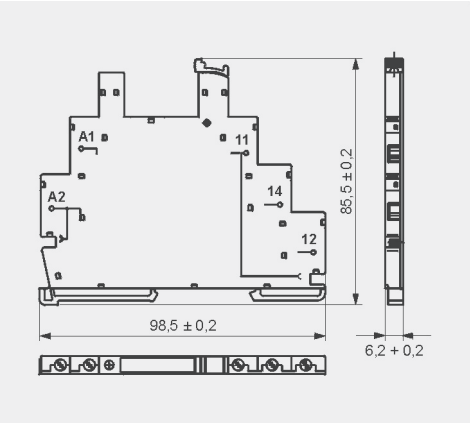

Accessories

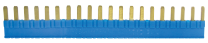

ZG20

PI6W-1246

❼ For RUC faston 4,8 x 0,5 and RUC-M, with GUC11 socket, max. switching voltages and coil voltages of relays are limited to 250 V AC / DC.
❽ Solid state relays type **RSR30** - see www.relpol.com.pl

PRECAUTIONS:
1. Ensure that the parameters of the product described in its specification provide a safety margin for the appropriate operation of the device or system and never use the product in circumstances which exceed the parameters of the product. **2.** Never touch any live parts of the device. **3.** Ensure that the product has been connected correctly. An incorrect connection may cause malfunction, excessive heating or risk of fire. **4.** In case of any risk of any serious material loss or death or injuries of humans or animals, the devices or systems shall be designed so to equip them with double safety system to guarantee their reliable operation.

For sockets type:
GZT80, GZM80, GZS80, GZMB80, GZT92, GZM92, GZS92, ES 32, GZT2, GZM2, GZMB2, GZT3, GZM3, GZT4, GZM4, GZMB4

Modules type M... are parallely connected with relay coil.
Polarity P: -A1/+A2. Polarity N: +A1/-A2.

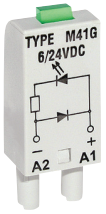

Modules type M...	Layout	Voltage	Type of module ❶ ❷
Module D (polarization P) It limits overvoltage on DC coils.	+A2 -A1	6/230 V DC	M21P
Module D (polarization N) It limits overvoltage on DC coils.	-A2 +A1	6/230 V DC	M21N
Module LD (polarization P) It limits overvoltage on DC coils. Coil energizing indication.	+A2 -A1	6/24 V DC 24/60 V DC 110/230 V DC	M31R, M31G M32R, M32G M33R, M33G
Module LD (polarization N) It limits overvoltage on DC coils. Coil energizing indication.	-A2 +A1	6/24 V DC 24/60 V DC 110/230 V DC	M41R, M41G M42R, M42G M43R, M43G
Module RC It protects against EMC disturbance. It limits overvoltage.	A2 A1	6/24 V AC 24/60 V AC 110/240 V AC	M51 M52 M53
Module L Coil energizing indication.	≂ A2 ± A1	6/24 V AC/DC 24/60 V AC/DC 110/230 V AC/DC	M61R, M61G M62R, M62G M63R, M63G
Module LV It limits overvoltage on AC and DC coils. Coil energizing indication.	≂ A2 ± A1	6/24 V AC/DC 24/60 V AC/DC 110/230 V AC/DC	M91R, M91G M92R, M92G M93R, M93G
Module V It limits overvoltage on AC and DC coils. No indication.	A2 A1	24 V AC 130 V AC 230 V AC	M71 M72 M73
Module R It limits overvoltage on AC coils.	A1 A2	110/230 V AC	M103

❶ **M...R** - LED red, **M...G** - LED green
❷ When ordering modules indicate their color: gray or black.

MODULE type M...

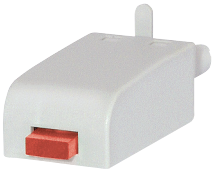

LED red – M...R

LED green – M...G

14.07.2014

Export Sales Department phone +48 68 47 90 832, 951 • e-mail: export@relpol.com.pl

ZGGZ80 for:

Plug-in sockets	Relays for plug-in sockets	Interface relays ❸
GZT80	RM84, RM85, RM85 inrush, RM85 105 °C sensitive, RMB841, RMB851, RM87L ❹, RM87P ❹, RM87N ❹	PI84-...-M..G (RM84 + GZT80)
GZM80		PI84-...-00L. (RM84 + GZM80)
GZS80		PI85-...-M..G (RM85 + GZT80)
GZT92		PI85-...-00L. (RM85 + GZM80)
GZM92		
GZS92		
ES 32	RM96 1 CO	

❸ Interface relay **PI84** (**PI85**) is offered as a **set**: plug-in socket **GZT80** or **GZM80** + miniature relay **RM84** (**RM85**) + signalling / protecting module **type M...** + retainer / retractor clip **GZT80-0040** + description plate **GZT80-0035**. ❹ Also versions RM87. sensitive

Interconnection strip ZGGZ80

- designed for the co-operation with plug-in sockets of miniature relays and with interface relays PI84 and PI85, which are equipped with screw terminals; sockets and relays are mounted on 35 mm rail mount acc. to PN-EN 60715,
- bridges common input signals (coil terminals A1 or A2) or output signals - see photo at the top,
- maximum permissible current is 10 A / 250 V AC,
- possibility of connection of 8 sockets or relays,
- colours of strips: **ZGGZ80-1** grey, **ZGGZ80-2** black.

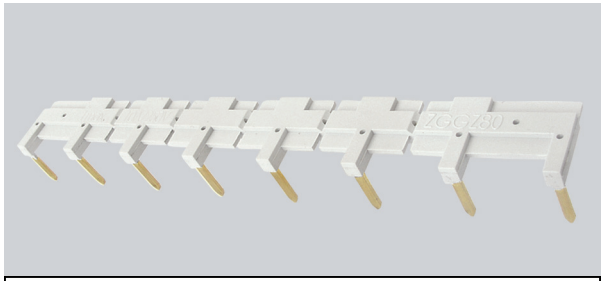

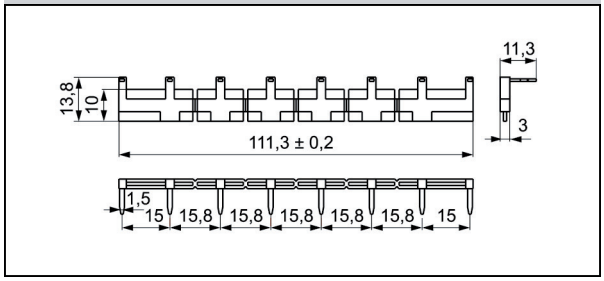

14.07.2014

ZGGZ4 for:

Plug-in sockets	Relays for plug-in sockets	Interface relays ❺
GZT2	R2N	PIR2-...-00L. (R2N + GZM2)
GZM2		PIR3-...-00L. (R3N + GZM3)
GZT3	R3N	PIR4-...-00L. (R4N + GZM4)
GZM3		
GZT4	R4N	
GZM4		

❺ Interface relay **PIR2** (**PIR3**, **PIR4**) is offered as a **set**: plug-in socket **GZM2** (**GZM3**, **GZM4**) + miniature industrial relay **R2N** (**R3N**, **R4N**) + signalling / protecting module **type M...** + retainer / retractor clip **GZT4-0040** + description plate **GZT4-0035**.

Interconnection strip ZGGZ4

- designed for the co-operation with plug-in sockets of miniature industrial relays and with interface relays PIR2, PIR3 and PIR4, which are equipped with screw terminals; sockets and relays are mounted on 35 mm rail mount acc. to PN-EN 60715,
- bridges common input signals (coil terminals A1 or A2) or output signals - see photo at the top,
- maximum permissible current is 10 A / 250 V AC,
- possibility of connection of 6 sockets or relays,
- colours of strips: **ZGGZ4-1** grey, **ZGGZ4-2** black.

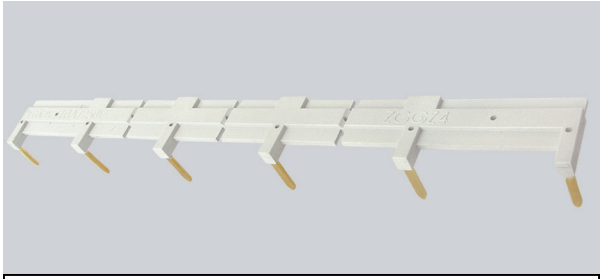

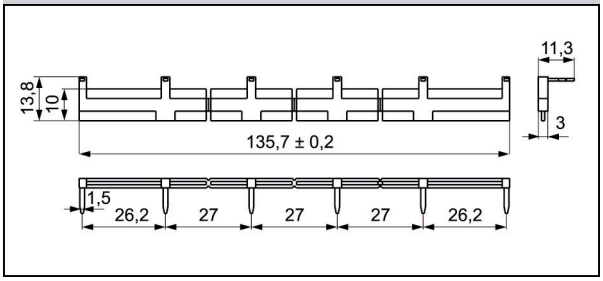

14.07.2014

Industrial relays for plug-in sockets: R2N, R3N, R4N, R15 - 2 CO ❼, R15 - 3 CO ❼ **with WT features as standard** (**W** - mechanical indicator + **T** - lockable front test button). **Detailed information** on additional features of individual relays can be found in the data sheets on the side of "Ordering codes".

Type ❻	Description	For industrial relays
W	mechanical indicator	R2N, R3N, R4N, (R15 - 2 CO, 3 CO ❼)
T	lockable front test button, orange colour - AC coils, green colour - DC coils	R2N, R3N, R4N, (R15 - 2 CO, 3 CO ❼)
L	light indicator (LED diode), located inside the relay	R2N, R3N, R4N, RY2, (R15 - 2 CO, 3 CO, 4 CO ❼) RUC, RUC-M
D	surge suppression element (diode) - only for DC coils	R2N, R3N, R4N, RY2, (R15 - 2 CO, 3 CO, 4 CO ❼)
V	surge suppression element (varistor) - only for AC coils	(R15 - 2 CO, 3 CO ❼)
K	test button without block function	(R15 - 4 CO ❼), RUC

❻ Available combinations:
WT, WTL, WTD, WTLD - in relays R2N, R3N, R4N for plug-in sockets
L, D, LD - in relays RY2 for plug-in sockets
WT, WTL, WTD, WTLD, WTV, WTLV - in relays R15 - 2 CO, 3 CO for plug-in sockets
K, L, D, KL, KD, LD, KLD - in relays R15 - 4 CO for plug-in sockets
K, L, KL - in relays RUC
L - in relays RUC-M
❼ Voltage versions, in covers

Test buttons type T R2N, R3N, R4N

Test buttons type T R15 - 2 CO, 3 CO

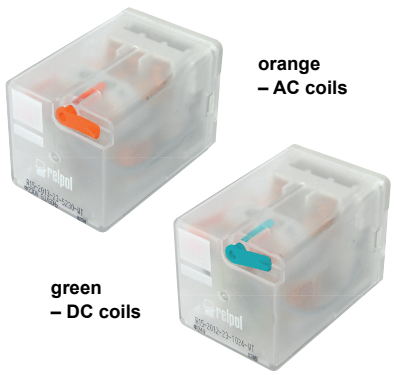

Test buttons (no latching) are recommended for R2N...WT, R3N...WT, R4N...WT, R15...WT 2 CO, R15...WT 3 CO relays - **for applications that do not allow permanent contact latching**. By manual operation (pressing the button) relay contacts can get switched for as long time as long the button is pressed. Contacts return to initial position as soon as pressure is released from the button. Those operations can be done while the coil is deenergized.

Button **R4P-0001** or **R15-M404** can be easily inserted by the Customer after removal of button type **T** (see Fig. 2). Button type **T** can be removed with screwdriver as shown on Fig. 1.

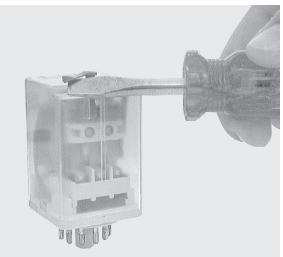

Fig. 1

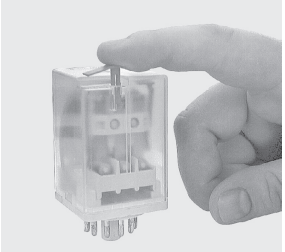

Fig. 2

Dimensions - test button **R4P-0001**
for **R2N...WT, R3N...WT, R4N...WT**

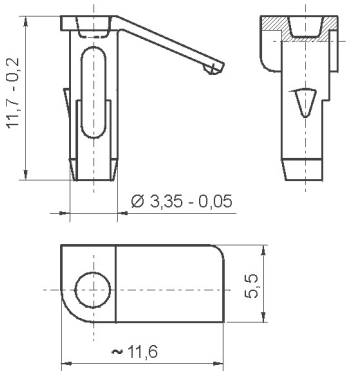

Types of buttons:
R4P-0001-A - orange colour (AC coils)
R4P-0001-D - green colour (DC coils)

Dimensions - test button **R15-M404**
for **R15...WT 2 CO, R15...WT 3 CO**

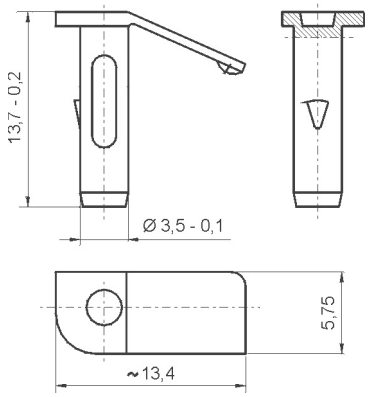

Types of buttons:
R15-M404-A - orange colour (AC coils)
R15-M404-D - green colour (DC coils)

Plugs R4W-0003 or **R15-M203** can substitute button type **T if manual operation (latching and testing) is not allowed**. Changing button type **T** for plug can be done by Customer themselves in the same way as changing button type **T** for button (no latching).

Dimensions - plug **R4W-0003**
for **R2N...WT, R3N...WT, R4N...WT**

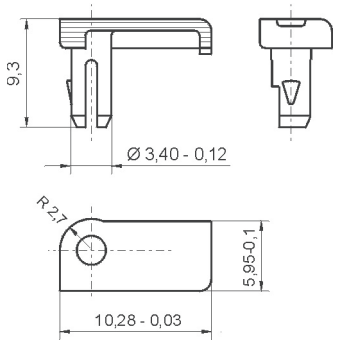

Types of plugs:
R4W-0003-A - orange colour (AC coils)
R4W-0003-D - green colour (DC coils)

Dimensions - plug **R15-M203**
for **R15...WT 2 CO, R15...WT 3 CO**

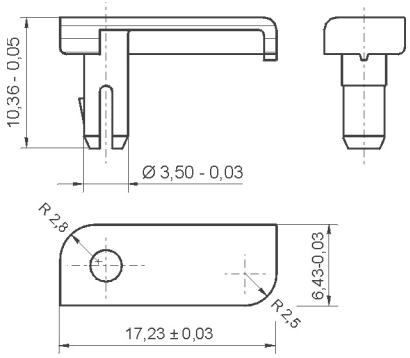

Types of plugs:
R15-M203-A - orange colour (AC coils)
R15-M203-D - green colour (DC coils)