EN: This Datasheet/Document is presented by the manufacturer.

Please visit our website for pricing and availability at www.hestore.hu.

Installation instructions for LED music level display kit

Try to choose soldering tin wire with the diameter of 0.6mm and 63% content of soldering tin, and select the pointed or knife edge electric soldering iron with 20W-30W for welding.

Weld front LED components first , and then weld the rear components.

During layout of chip LED, the same row or column should be the same color, and there should be no multicolor in the same row or column.

The differences of the positive and negative electrode of LED are as shown in figure.

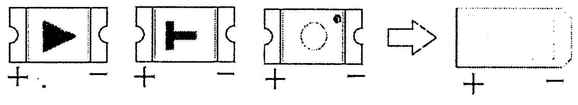

The methods for components welding are shown in figure. Firstly, add soldering tin to the welding spot, clamp the component with tweezer and weld one end of the component, and then weld the other end later.

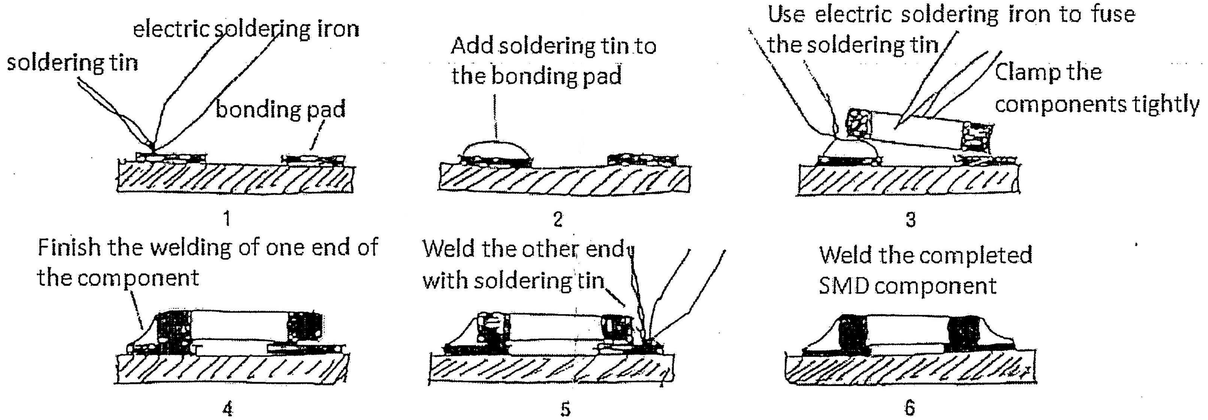

IC welding is shown as the figure: face to the IC characters, the left bottom is 1 pin, and the order of the pin starts from the 1 pin in anticlockwise. Facing the notch or dot to the notch or dot on the circuit board.

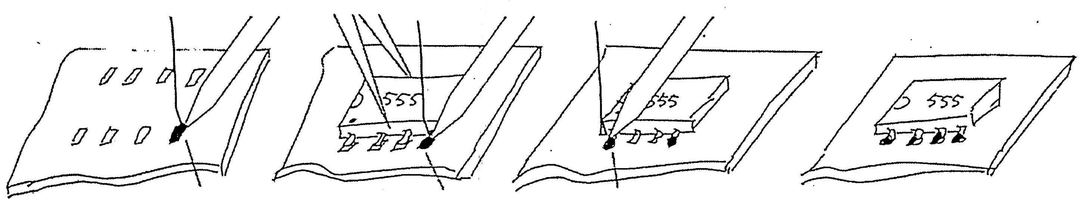

101 indicates 100 Ω ; 104 indicates 100K; 100 indicates 10 Ω ; 203 indicates 20K; The brown one is chip capacitor, the large one is 1uF and the small one is 0.1uF.

Test: Press and hold the touch switch first, then charge the circuit with electricity of 5V, and then the LED will display according to the law; if the LED continuously lights or doesn't light, please check whether the LED is inversely connected or inveracious soldering. If the whole row or column doesn't light, please check the electrical resistance of U1 or R1. Change the value of electrical resistance of R02 or R01, the volume size can be changed.

Install shell: tear off the protective film of the shell, and fix the shell with screws.

Component installation diagram

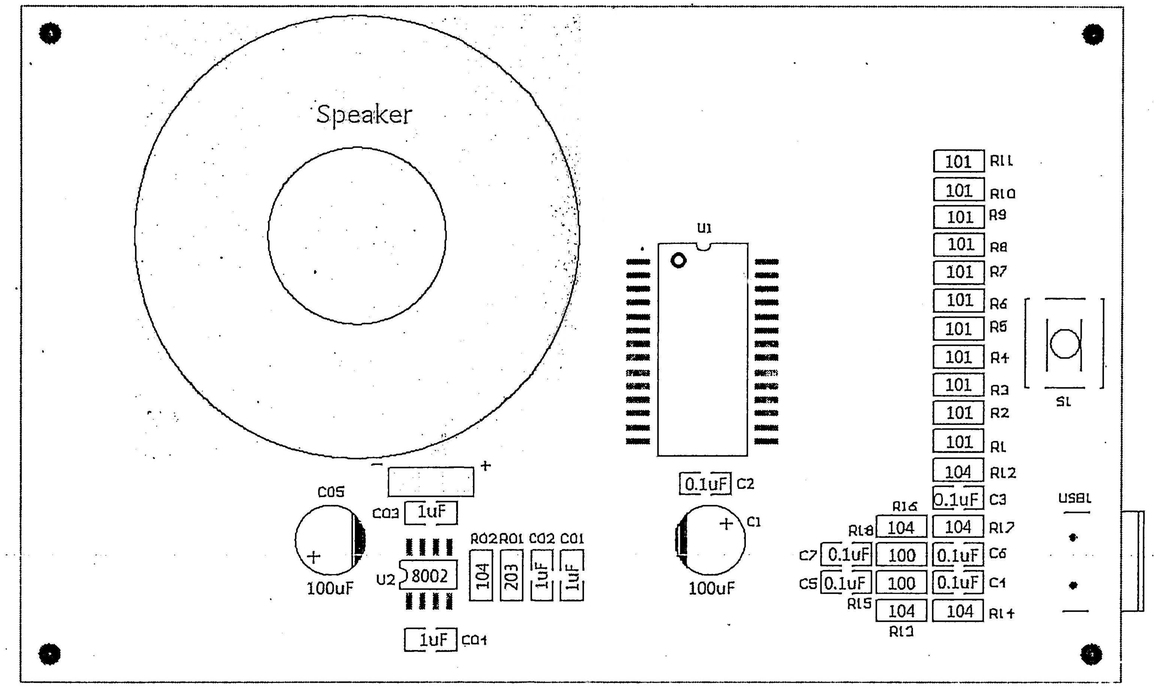

Circuit schematics

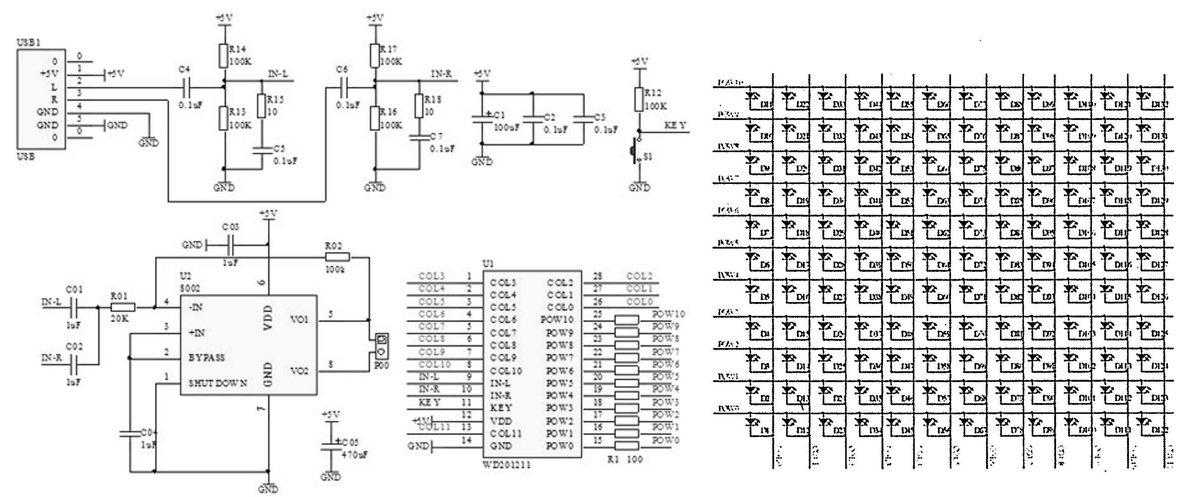

Detailed diagram instructions

http://www.diyleyuan.com/JC/02.html