EN: This Datasheet/Document is presented by the manufacturer.

Please visit our website for pricing and availability at www.hestore.hu.

DOG SERIES 3.3V

INCL. CONTROLLER ST7036 FOR 4-/8-BIT, SPI (4-WIRE)

EA DOGM163B-A
blue

EA LED55x31-W
white

available for 1 pc. off!
even with LED: 5.8mm flat

EA DOGM081S-A
+ EA LED55x31-W

EA DOGM081W-A
+ EA LED55x31-B

EA DOGM162E-A
+ EA LED55x31-G

EA DOGM162W-A
+ EA LED55x31-A

EA DOGM163W-A
+ EA LED55x31-W

TECHNICAL DATA

* HIGH-CONTRAST LCD SUPERTWIST DISPLAY
* OPTIONAL LED BACKLIGHT UNITS IN DIFFERENT COLORS
* 1x8, 2x16 AND 3x16 WITH 12.0 mm / 5.6 mm AND 3.6 mm CHARACTER HEIGHT
* ST 7036 CONTROLLER FOR 4-BIT, 8-BIT AND SPI (4-WIRE) INTERFACE
* POWER SUPPLY +3.3V OR +5V SINGLE SUPPLY (typically 250µA)
* NO ADDITIONAL VOLTAGES REQUIRED
* OPERATING TEMPERATURE RANGE -20 THROUGH +70°C
* LED BACKLIGHT 3 through 80mA @ 3.3V or 2 through 40mA @ 5V
* NO MOUNTING REQUIRED, SIMPLY SOLDER INTO PCB

ORDERING CODE

LCD MODULE 1x8 - 11.97mm	**EA DOGM081x-A**
LCD MODULE 2X16 - 5.57 mm	**EA DOGM162x-A**
LCD MODULE 3X16 - 3.65mm	**EA DOGM163x-A**

x: ***B*** *= blue background*
E *= yellow/green background*
L *= yellow/green background (cannot be backlit)*
S *= black background*
W *= white background*

LED BACKLIGHT, WHITE	**EA LED55X31-W**
LED BACKLIGHT, YELLOW/GREEN	**EA LED55X31-G**
LED BACKLIGHT, BLUE	**EA LED55X31-B**
LED BACKLIGHT, RED	**EA LED55X31-R**
LED BACKLIGHT, AMBER	**EA LED55X31-A**
LED BACKLIGHT, FULL COLOR RGB	**EA LED55X31-RGB**
USB TEST BOARD FOR PC (WINDOWS) **new !**	**EA 9780-1USB**
SOCKET CONNECTOR 4.8 mm HIGH (1x20-PIN, 2.54mm PITCH)	**EA FL-20P**

ELECTRONIC ASSEMBLY GMBH
making things easy

LOCHHAMER SCHLAG 17 · D - 82 166 GRAEFELFING
Phone +49-89-8541991 · FAX +49-89-8541721 · http://www.lcd-module.de

EA DOG SERIES

With its EA DOG series, ELECTRONIC ASSEMBLY presents the world's first display series which will run on 3.3 V systems without auxiliary power. They can, of course be used on traditional 5 V systems. Unlike normal LCD modules, you order the display and the corresponding backlight separately. This gives you a wealth of possible combinations.
Designed for compact hand-held devices, this modern LCD range provides a number of real benefits with or without backlight:

* extremely compact at 55 x 31 mm at the standard font size of 5.57 mm (2 x 16)
* ultra-flat at 2.0 mm without backlight or 5.8 mm including LED backlight
* 4-bit, 8-bit and SPI interface (4-wire)
* typical power consumption of only 250µA in full operation (LED white backlight as of 3mA)
* easy installation by simply soldering into the board
* A whole range of design variants (63) can be supplied as of single units
* Changing background color

SETTING THE CONTRAST

The contrast on all displays of the EA DOG series can be set with a command. This is done using bits C0 through C5 in the commands "Contrast Set" and "Power/Icon Control/Contrast Set". Generally, the contrast is set once and kept constant across the entire operating temperature range (-20 through +70°C) thanks to the integrated temperature compensation function.
Even when run at 3.3 V, the displays do not require any additional negative voltage!

LED BACKLIGHTS

6 different variants are available for individual backlighting: white, yellow/green, blue, red, amber and full color.

For monochrome backlights, 2 separate LED paths are available, which can be switched in parallel or in series to ideally match the system voltage. This means that all the backlights can be run either at 5 V or at 3.3 V.

Operation of the backlight requires an external series resistor for current limiting. This can be calculated from R=U/I; you will find the values in the table. To improve life time it is recommanded to use a current source only.

The operating life of the yellow/green, red and amber backlights is 100,000 hours and that of the white and blue backlights much shorter.
Important: Never operate the backlight directly on a 5 V/ 3.3V supply, as this can immediately destroy the LEDs!

yellow/green EA LED55x31-G	Forwar voltage	Current max.	Limiting resistor	
			@ 3,3 V	@ 5 V
Connected in parallel	2,2 V	80 mA	14 ohm	35 ohm
Connected in series	4,4 V	40 mA	-	15 ohm

white EA LED55x31-W	Forwar voltage	Current max.	Limiting resistor	
			@ 3,3 V	@ 5 V
Connected in parallel	3,2 V	60 mA	1,6 ohm	30 ohm
Connected in series	6,4 V	30 mA	-	-

blue EA LED55x31-B	Forwar voltage	Current max.	Limiting resistor	
			@ 3,3 V	@ 5 V
Connected in parallel	3,2 V	60 mA	1,6 ohm	30 ohm
Connected in series	6,4 V	30 mA	-	-

amber EA LED55x31-A	Forwar voltage	Current max.	Limiting resistor	
			@ 3,3 V	@ 5 V
Connected in parallel	2,4 V	80 mA	11 ohm	32 ohm
Connected in series	4,8 V	40 mA	-	5 ohm

red EA LED55x31-R	Forwar voltage	Current max.	Limiting resistor	
			@ 3,3 V	@ 5 V
Connected in parallel	2,1 V	80 mA	15 ohm	36 ohm
Connected in series	4,2 V	40 mA	-	20 ohm

Full color EA LED55x31-RGB	Forwar voltage	Current max.	Limiting resistor	
			@3,3 V	@ 5 V
Connected in parallel	4 V	125 mA	-	3x24 ohm

INSTALLATION

First, the display and the corresponding backlight are clipped together. The complete unit is then inserted into a PCB and soldered. Note that the 4 pins for the backlight must also be soldered from the top.
Important: There are one or two protective films on the display (top and/or rear side) and one on each backlight. Those have to be removed during or after production.

Change without notice. Printing error reserved

5 DIFFERENT TECHNOLOGIES

As a standard we provide 5 different technologies as STN and FSTN:

display type	technology	optional backlight	readability	display color non backlighted	display color with backlighted	recommended backlight color
	FSTN pos. transflective	it's fine with and without backlight	readable even without backlight	black on white	black on backlight color	white, blue, RGB
	STN pos. yellow/green transmissive	backlight unit required	readable even without backlight	dark green on yellow/green	black on yellow/green or amber	yellow/green, amber
	STN neg. blue transmissive	usage only with backlight	---	---	backlight color on blue background	white, yellow/green
	FSTN neg. transmissive	usage only with backlight	---	---	backlight color on black background	white, RGB
	STN pos. yellow/green reflective	no backlight possible	finest readable without backlight	dark green on yellow/green	---	---

3 DIFFERENT DISPLAYS

These displays are available for mentioned technologies:

6 DIFFERENT BACKLIGHTS

6 different backlight colors are available to match equipments design as much as possible. The most effective and brightest one is the white one EA LED55x31-W.

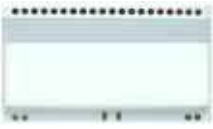

EA LED55x31-W White

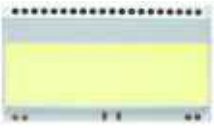

EA LED55x31-G Yellow/Green

EA LED55x31-B Blue

EA LED55x31-R Red

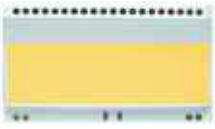

EA LED55x31-A Amber

EA LED55x31-RGB Full Color

When you can see black and white pictures only here on this page then you're able to download a coloured version from our website http://www.lcd-module.de/eng/pdf/doma/dogme.pdf

Change without notice. Printing error reserved

APPLICATION EXAMPLES

Different wiring must be used depending on the interface and the power supply. 2 additional capacitors are required for 3.3 V operation.
Note that the COG technology means that the current capacity of the outputs is limited. Therefore, a large load on the bus may cause signal loops and unclean levels. If in doubt, additional pull-down resistors (8051) are required or additional waits/NOPs must be incorporated.

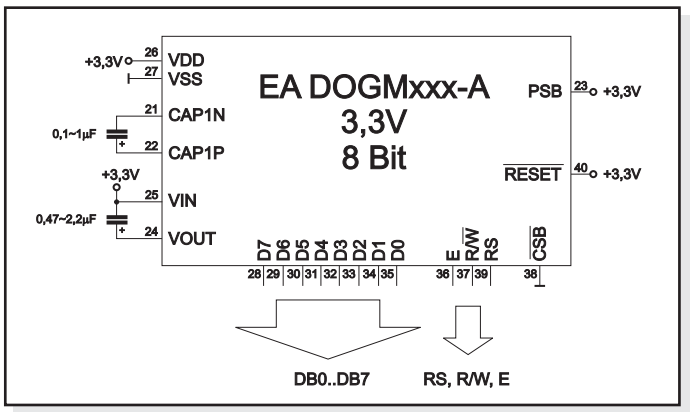

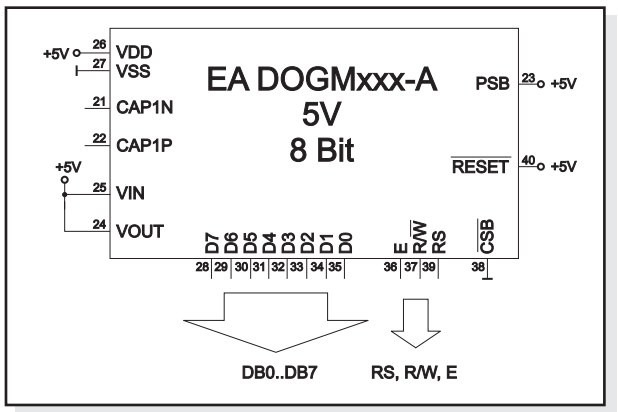

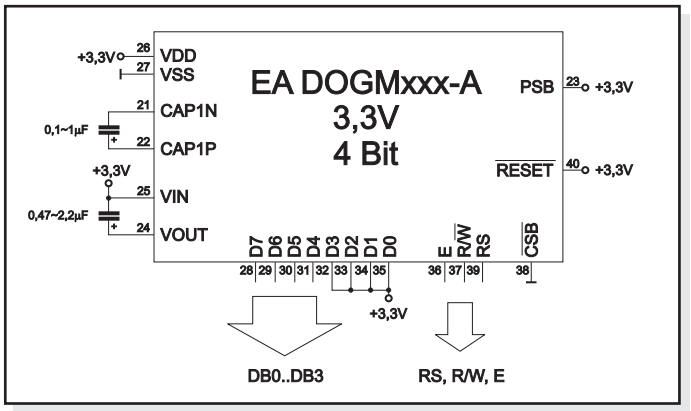

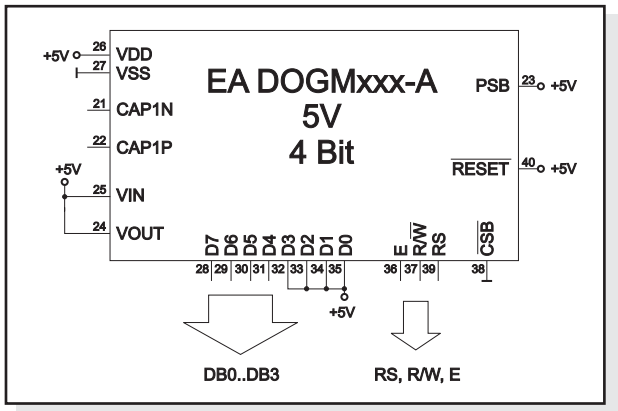

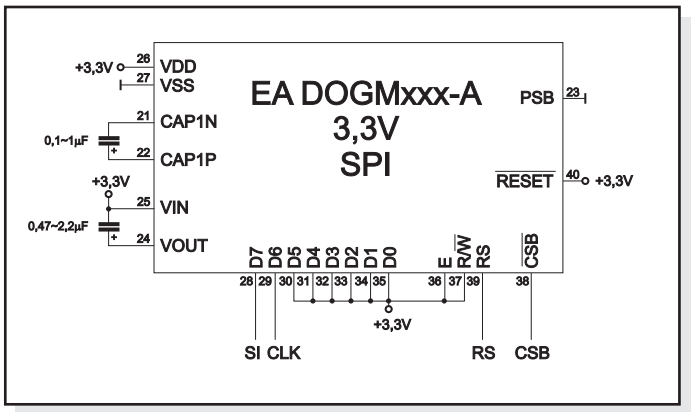

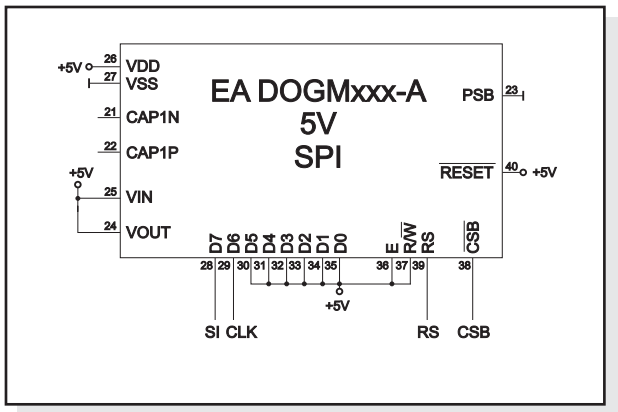

USB-TEST BOARD EA 9780-1USB

For easy startup, a USB test board is available that can be connected to a PC. A USB cable and Windows software is supplied with the product. This allows text and images (BMP) to displayed directly on the connected display.

SIMULATION WITH WINDOWS

A simulator window also displays the contents of the display. The software can simulate all the displays and colors even without the hardware. You can download the software free from our website: http://www.lcd-module.de/deu/disk/startdog.zip

Change without notice. Printing error reserved

CHARACTER SET

The below show character set is alerady built-in. In addition to that you are able to define 8 characters by your own.

A detailed description for integrated controller ST7036 you can find under http://www.lcd-module.de/eng/pdf/zubehoer/st7036.pdf

Change without notice. Printing error reserved

TABLE OF COMMAND

Instruction	Instruction Code										Description	Instruction Execution Time		
	RS	R/W	DB7	DB6	DB5	DB4	DB3	DB2	DB1	DB0		OSC= 380kHz	OSC= 540kHz	OSC= 700kHz
Clear Display	0	0	0	0	0	0	0	0	0	1	Write "20H" to DDRAM. and set DDRAM address to "00H" from AC	1.08 ms	0.76 ms	0.59 ms
Return Home	0	0	0	0	0	0	0	0	1	x	Set DDRAM address to "00H" from AC and return cursor to its original position if shifted. The contents of DDRAM are not changed.	1.08 ms	0.76 ms	0.59 ms
Entry Mode Set	0	0	0	0	0	0	0	1	I/D	S	Sets cursor move direction and specifies display shift. These operations are performed during data write and read.	26.3 µs	18.5 µs	14.3 µs
Display ON/OFF	0	0	0	0	0	0	1	D	C	B	D=1:entire display on C=1:cursor on B=1:cursor position on	26.3 µs	18.5 µs	14.3 µs
Function Set	0	0	0	0	1	DL	N	DH	IS2	IS1	DL: interface data is 8/4 bits N: number of line is 2/1 DH: double height font IS[2:1]: instruction table select	26.3 µs	18.5 µs	14.3 µs
Set DDRAM Address	0	0	1	AC6	AC5	AC4	AC3	AC2	AC1	AC0	Set DDRAM address in address counter	26.3 µs	18.5 µs	14.3 µs
Read Busy Flag and Address	0	1	BF	AC6	AC5	AC4	AC3	AC2	AC1	AC0	Whether during internal operation or not can be known by reading BF. The contents of address counter can also be read.	0	0	0
Write Data to RAM	1	0	D7	D6	D5	D4	D3	D2	D1	D0	Write data into internal RAM (DDRAM/CGRAM/ICONRAM)	26.3 µs	18.5 µs	14.3 µs
Read Data from RAM	1	1	D7	D6	D5	D4	D3	D2	D1	D0	Read data from internal RAM (DDRAM/CGRAM/ICONRAM)	26.3 µs	18.5 µs	14.3 µs
Instruction table 0(IS[2:1]=[0,0])														
Cursor or Display Shift	0	0	0	0	0	1	S/C	R/L	X	X	S/C and R/L: Set cursor moving and display shift control bit, and the direction, without changing DDRAM data.	26.3 µs	18.5 µs	14.3 µs
Set CGRAM	0	0	0	1	AC5	AC4	AC3	AC2	AC1	AC0	Set CGRAM address in address counter	26.3 µs	18.5 µs	14.3 µs
Instruction table 1(IS[2:1]=[0,1])														
Bias Set	0	0	0	0	0	1	BS	1	0	FX	BS=1:1/4 bias BS=0:1/5 bias FX: fixed on high in 3-line application and fixed on low in other applications.	26.3 µs	18.5 µs	14.3 µs
Set ICON Address	0	0	0	1	0	0	AC3	AC2	AC1	AC0	Set ICON address in address counter.	26.3 µs	18.5 µs	14.3 µs
Power/ICON Control/ Contrast Set	0	0	0	1	0	1	Ion	Bon	C5	C4	Ion: ICON display on/off Bon: set booster circuit on/off C5,C4: Contrast set for internal follower mode.	26.3 µs	18.5 µs	14.3 µs
Follower Control	0	0	0	1	1	0	Fon	Rab 2	Rab 1	Rab 0	Fon: set follower circuit on/off Rab2~0: select follower amplified ratio.	26.3 µs	18.5 µs	14.3 µs
Contrast Set	0	0	0	1	1	1	C3	C2	C1	C0	Contrast set for internal follower mode.	26.3 µs	18.5 µs	14.3 µs
Instruction table 2(IS[2:1]=[1,0])														
Double Height Position Select	0	0	0	0	0	1	UD	X	x	x	UD: Double height position select	26.3 µs	18.5 µs	14.3 µs
Reserved	0	0	0	1	X	X	X	X	X	X	Do not use (reserved for test)	26.3 µs	18.5 µs	14.3 µs

A detailed description for integrated controller ST7036 you can find under http://www.lcd-module.de/eng/pdf/zubehoer/st7036.pdf

Change without notice. Printing error reserved

EXAMPLES FOR INITIALISATION

EA DOGM081

Example of initialisation: 8 bit / 3.3V
EA DOGM081

Command	RS	R/W	DB7	DB6	DB5	DB4	DB3	DB2	DB1	DB0	Hex	Note
Function Set	0	0	0	0	1	1	0	0	0	1	$31	8 bit data length, 1 line, instruction table 1
Bias Set	0	0	0	0	0	1	0	1	0	0	$14	BS: 1/5, 1 line LCD
Power Control	0	0	0	1	0	1	0	1	0	1	$55	booster on, contrast C5, set C4
Follower Control	0	0	0	1	1	0	1	1	0	1	$6D	set voltage follower and gain
Contrast Set	0	0	0	1	1	1	1	1	0	0	$7C	set contrast C3, C2, C1
Function Set	0	0	0	0	1	1	0	0	0	0	$30	switch back to instruction table 0
Display ON/OFF	0	0	0	0	0	0	1	1	1	1	$0F	display on, cursor on, cursor blink
Clear Display	0	0	0	0	0	0	0	0	0	1	$01	delete display, cursor at home
Entry Mode Set	0	0	0	0	0	0	0	1	1	0	$06	cursor auto-increment

Initialisation for 3.3V

Example of initialisation: 8 bit / 5V
EA DOGM081

Command	RS	R/W	DB7	DB6	DB5	DB4	DB3	DB2	DB1	DB0	Hex	Note
Function Set	0	0	0	0	1	1	0	0	0	1	$31	8 bit data length, 1 line, instruction table 1
Bias Set	0	0	0	0	0	1	1	1	0	0	$1C	BS: 1/4, 1 line LCD
Power Control	0	0	0	1	0	1	0	0	0	1	$51	booster off, contrast C5, set C4
Follower Control	0	0	0	1	1	0	1	0	1	0	$6A	set voltage follower and gain
Contrast Set	0	0	0	1	1	1	0	1	0	0	$74	set contrast C3, C2, C1
Function Set	0	0	0	0	1	1	0	0	0	0	$30	switch back to instruction table 0
Display ON/OFF	0	0	0	0	0	0	1	1	1	1	$0F	display on, cursor on, cursor blink
Clear Display	0	0	0	0	0	0	0	0	0	1	$01	delete display, cursor at home
Entry Mode Set	0	0	0	0	0	0	0	1	1	0	$06	cursor auto-increment

Initialisation for 5V

EA DOGM162

Example of initialisation: 8 Bit / 3.3V
EA DOGM162

Command	RS	R/W	DB7	DB6	DB5	DB4	DB3	DB2	DB1	DB0	Hex	Note
Function Set	0	0	0	0	1	1	1	0	0	1	$39	8 bit data length, 2 lines, instruction table 1
Bias Set	0	0	0	0	0	1	0	1	0	0	$14	BS: 1/5, 2 line LCD
Power Control	0	0	0	1	0	1	0	1	0	1	$55	booster on, contrast C5, set C4
Follower Control	0	0	0	1	1	0	1	1	0	1	$6D	set voltage follower and gain
Contrast Set	0	0	0	1	1	1	1	0	0	0	$78	set contrast C3, C2, C1
Function Set	0	0	0	0	1	1	1	0	0	0	$38	switch back to instruction table 0
Display ON/OFF	0	0	0	0	0	0	1	1	1	1	$0F	display on, cursor on, cursor blink
Clear Display	0	0	0	0	0	0	0	0	0	1	$01	delete display, cursor at home
Entry Mode Set	0	0	0	0	0	0	0	1	1	0	$06	cursor auto-increment

Initialisation for 3.3V

Example of initialisation: 8 bit / 5V
EA DOGM162

Command	RS	R/W	DB7	DB6	DB5	DB4	DB3	DB2	DB1	DB0	Hex	Note
Function Set	0	0	0	0	1	1	1	0	0	1	$39	8 bit data length, 2 lines, instruction table 1
Bias Set	0	0	0	0	0	1	1	1	0	0	$1C	BS: 1/4, 2 line LCD
Power Control	0	0	0	1	0	1	0	0	1	0	$52	booster off, contrast C5, set C4
Follower Control	0	0	0	1	1	0	1	0	0	1	$69	set voltage follower and gain
Contrast Set	0	0	0	1	1	1	0	1	0	0	$74	set contrast C3, C2, C1
Function Set	0	0	0	0	1	1	1	0	0	0	$38	switch back to instruction table 0
Display ON/OFF	0	0	0	0	0	0	1	1	1	1	$0F	display on, cursor on, cursor blink
Clear Display	0	0	0	0	0	0	0	0	0	1	$01	delete display, cursor at home
Entry Mode Set	0	0	0	0	0	0	0	1	1	0	$06	cursor auto-increment

Initialisation for 5V

EA DOGM163

Example of initialisation: 8 bit / 3.3V
EA DOGM163

Befehl	RS	R/W	DB7	DB6	DB5	DB4	DB3	DB2	DB1	DB0	Hex	Bemerkung
Function Set	0	0	0	0	1	1	1	0	0	1	$39	8 bit data length, 2 lines, instruction table 1
Bias Set	0	0	0	0	0	1	0	1	0	1	$15	BS: 1/5, 3 line LCD
Power Control	0	0	0	1	0	1	0	1	0	1	$55	booster on, contrast C5, set C4
Follower Control	0	0	0	1	1	0	1	1	1	0	$6E	set voltage follower and gain
Contrast Set	0	0	0	1	1	1	0	0	1	0	$72	set contrast C3, C2, C1
Function Set	0	0	0	0	1	1	1	0	0	0	$38	switch back to instruction table 0
Display ON/OFF	0	0	0	0	0	0	1	1	1	1	$0F	display on, cursor on, cursor blink
Clear Display	0	0	0	0	0	0	0	0	0	1	$01	delete display, cursor at home
Entry Mode Set	0	0	0	0	0	0	0	1	1	0	$06	cursor auto-increment

Initialisation for 3.3V

Example of initialisation: 8 bit / 5V
EA DOGM163

Command	RS	R/W	DB7	DB6	DB5	DB4	DB3	DB2	DB1	DB0	Hex	Note
Function Set	0	0	0	0	1	1	1	0	0	1	$39	8 bit data length, 2 lines, instruction table 1
Bias Set	0	0	0	0	0	1	1	1	0	1	$1D	BS: 1/4, 3 line LCD
Power Control	0	0	0	1	0	1	0	0	0	0	$50	booster off, contrast C5, set C4
Follower Control	0	0	0	1	1	0	1	1	0	0	$6C	set voltage follower and gain
Contrast Set	0	0	0	1	1	1	1	1	0	0	$7C	set contrast C3, C2, C1
Function Set	0	0	0	0	1	1	1	0	0	0	$38	switch back to instruction table 0
Display ON/OFF	0	0	0	0	0	0	1	1	1	1	$0F	display on, cursor on, cursor blink
Clear Display	0	0	0	0	0	0	0	0	0	1	$01	delete display, cursor at home
Entry Mode Set	0	0	0	0	0	0	0	1	1	0	$06	cursor auto-increment

Initialisation for 5V

Change without notice. Printing error reserved

EA DOG-M

DIMENSIONS

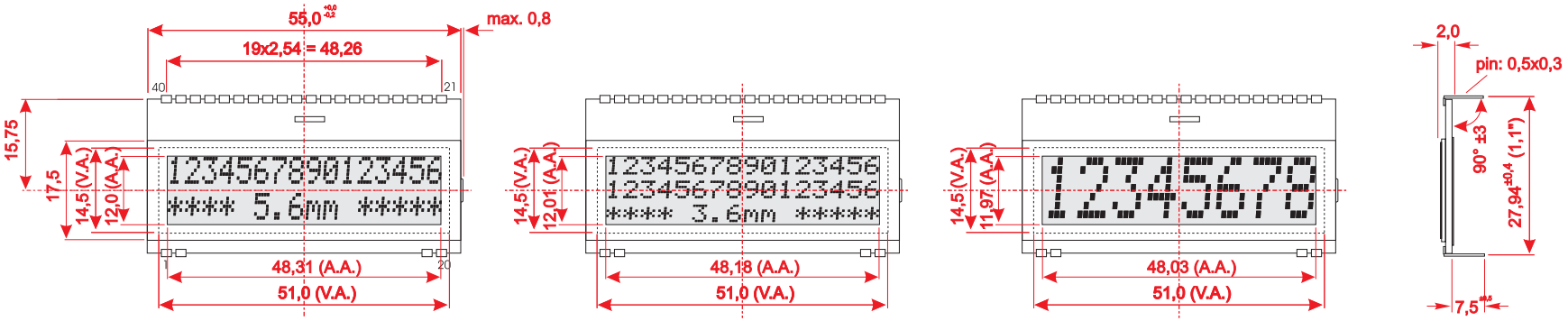

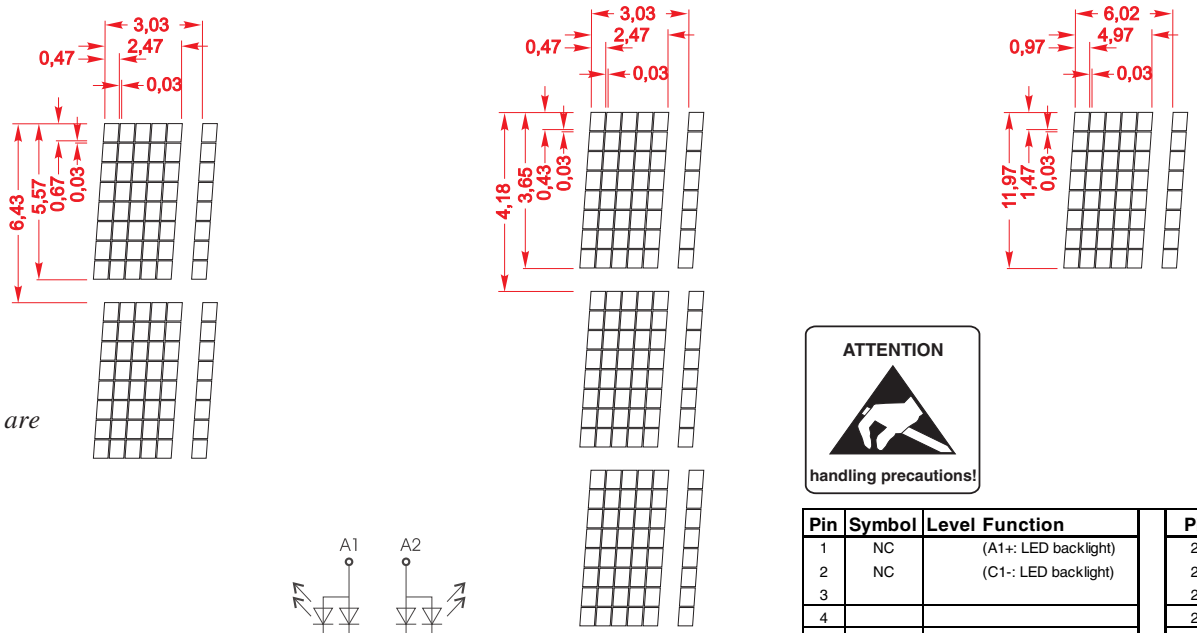

alle dimensions are in mm

Note:
- LC-displays are not suited for wave soldering or reflow soldering. Temperatures above +80°C may damage lcd-module.
- Surfaces of display and backlight are with protection foils protected against scratching. Please remove before use.

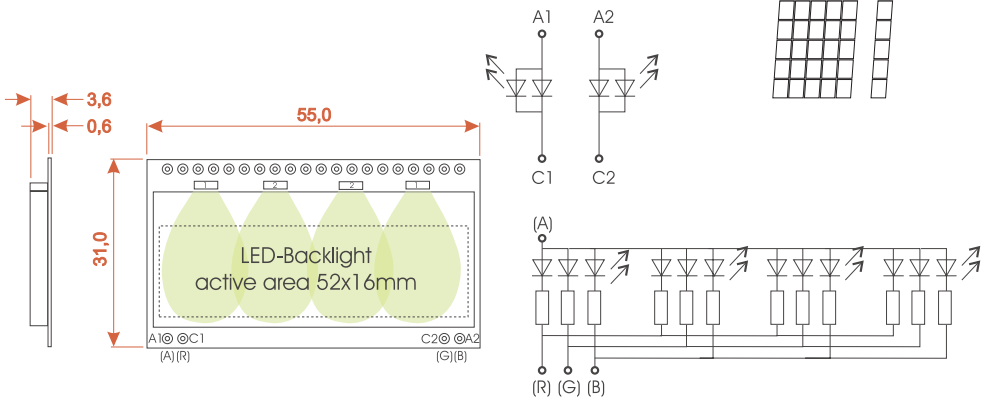

Note: The 4 LED pins A1, C1, A2 and C2 (or A, R, G, B) must be soldered from the top to ensure a clean contact.

Pin	Symbol	Level	Function
1	NC		(A1+: LED backlight)
2	NC		(C1-: LED backlight)
3			
4			
5			
6			
7			
8			
9			
10			
11			
12			
13			
14			
15			
16			
17			
18			
19	NC		(C2-: LED backlight)
20	NC		(A2+: LED backlight)

Pin	Symbol	Level	Function
21	CAP1N	-	Voltage Booster + (0,1..1uF)
22	CAP1P	-	Voltage Booster - (0,1..1uF)
23	PSB	H / L	L= Serial Mode, H= Parallel Mode
24	VOUT	-	Voltage Booster Output
25	VIN	-	Voltage Booster Input
26	VDD	H	Power Supply +3,3..5V
27	VSS	L	Power Supply 0V (GND)
28	D7	H / L	Display Data (MSB)
29	D6	H / L	Display Data
30	D5	H / L	Display Data
31	D4	H / L	Display Data
32	D3	H / L	Display Data
33	D2	H / L	Display Data
34	D1	H / L	Display Data
35	D0	H / L	Display Data (LSB)
36	E	H	Enable (falling edge)
37	R/W	H / L	L= Write, H=Read
38	CSB	L	Chip Select
39	RS	H / L	L= Command, H= Data
40	RESET	L	Reset

LOCHHAMER SCHLAG 17 · D-82166 GRAEFELFING
Phone +49-89-8541991 · FAX +49-89-8541721 · http://www.lcd-module.de

ELECTRONIC ASSEMBLY GMBH
making things easy