EN: This Datasheet/Document is presented by the manufacturer.

Please visit our website for pricing and availability at www.hestore.hu.

UNIVAL® BLADE TYPE FUSE

UniVAL® fuses are compliant with ISO 8820-3 Standard (Type "C"), the first standard automotive blade fuse.
UniVAL® are made of Zinc alloy whose low melting temperature avoids heavy over temperatures

Breaking capacity: 1000[A]
Voltage rating: 32[Vdc]
Ambient temperature: -40°C to +125°C

MTA/ISO UniVAL® operating time limits		
% I_N	min [s]	max [s]
110	360000	-
135	0,75	600
160	0,25	50
200	0,15	5
350	0,04	0,5
600	0,02	0,1

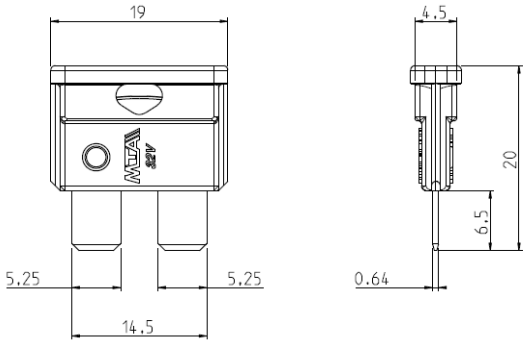

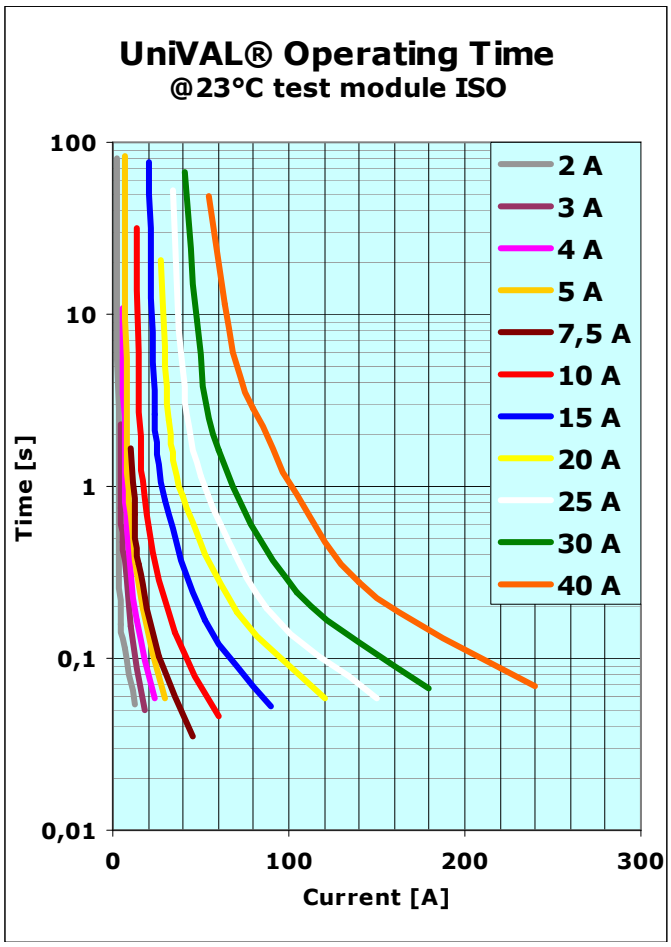

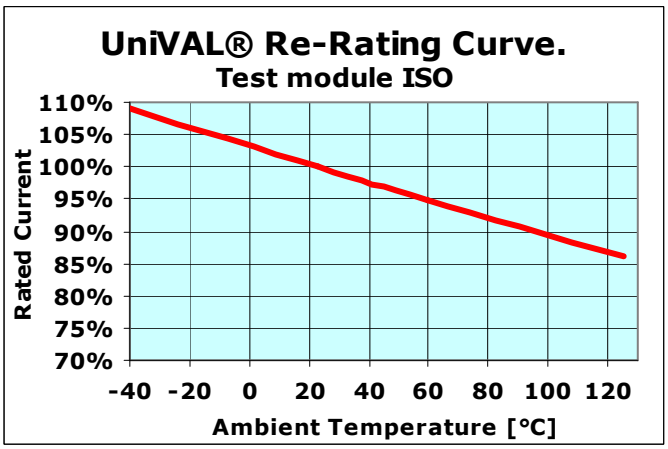

CURRENT RATING [A]	VOLTAGE DROP @ current rating [mV]	CABLE SIZE [mm^2]	I^2t
2	142	0,35	157
3	135		200
4	126		205
5	119	0,5	218
7,5	139	0,75	304
10	112	1,0	320
15	104	1,5	480
20	117	2,5	720
25	104		1155
30	103	4,0	1843
40	101	6,0	2880

© MTA SpA - ALL RIGHTS RESERVED - OCTOBER 2011 - Rev. 0