Kingbright

2.8X0.8mm RIGHT ANGLE SMD CHIP LED LAMP

Part Number: KA-2810AQBS-F Blue

ATTENTION
OBSERVE PRECAUTIONS
FOR HANDLING
ELECTROSTATIC
DISCHARGE
SENSITIVE
DEVICES

Features

- 2.8mmX0.8mm right angle SMT LED, 1.2mm thickness.
- Low power consumption.
- Ideal for backlight and indicator.
- Various colors and lens types available.
- Package : 2000pcs / reel.
- Moisture sensitivity level : level 3.
- RoHS compliant.

Description

The Blue source color devices are made with InGaN Light Emitting Diode.

Static electricity and surge damage the LEDS.

It is recommended to use a wrist band or anti-electrostatic glove when handling the LEDs.

All devices, equipment and machinery must be electrically grounded.

Package Dimensions

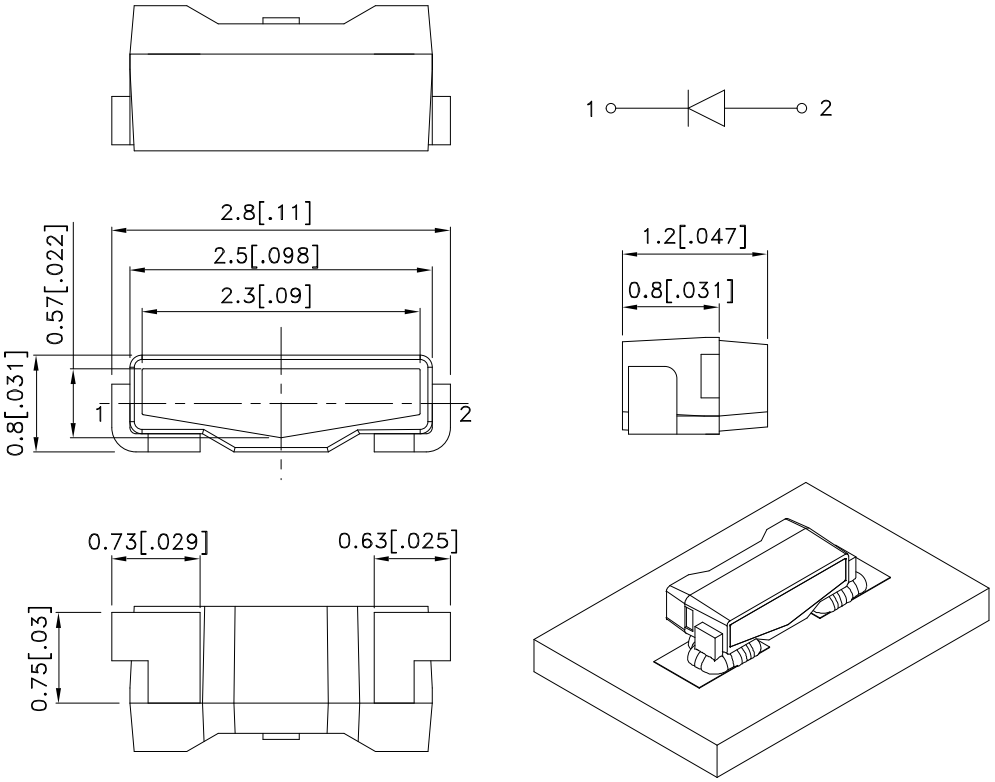

Notes:
1. All dimensions are in millimeters (inches).
2. Tolerance is ±0.1(0.0039") unless otherwise noted.
3. The specifications, characteristics and technical data described in the datasheet are subject to change without prior notice.
4. The device has a single mounting surface. The device must be mounted according to the specifications.

Handling Precautions

Compare to epoxy encapsulant that is hard and brittle, silicone is softer and flexible. Although its characteristic significantly reduces thermal stress, it is more susceptible to damage by external mechanical force.
As a result, special handling precautions need to be observed during assembly using silicone encapsulated

Do not directly touch or handle the silicone lens surface. It may damage the internal circuitry.

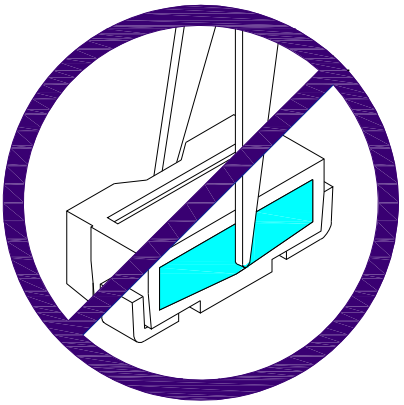

Selection Guide

Part No.	Dice	Lens Type	Iv (mcd) [2] @ 20mA		Viewing Angle [1]
			Min.	Typ.	2θ1/2
KA-2810AQBS-F	Blue (InGaN)	WATER CLEAR	110	250	110°

Notes:
1. θ1/2 is the angle from optical centerline where the luminous intensity is 1/2 of the optical peak value.
2. Luminous intensity/ luminous Flux: +/-15%.

Electrical / Optical Characteristics at TA=25°C

Symbol	Parameter	Device	Typ.	Max.	Units	Test Conditions
λpeak	Peak Wavelength	Blue	461		nm	I_F=20mA
λD [1]	Dominant Wavelength	Blue	465		nm	I_F=20mA
Δλ1/2	Spectral Line Half-width	Blue	25		nm	I_F=20mA
C	Capacitance	Blue	100		pF	V_F=0V;f=1MHz
V_F [2]	Forward Voltage	Blue	3.3	4	V	I_F=20mA
I_R	Reverse Current	Blue		50	uA	V_R=5V

Notes:
1.Wavelength: +/-1nm.
2. Forward Voltage: +/-0.1V.

Absolute Maximum Ratings at TA=25°C

Parameter	Blue	Units
Power dissipation	120	mW
DC Forward Current	30	mA
Peak Forward Current [1]	150	mA
Reverse Voltage	5	V
Operating Temperature	-40°C To +85°C	
Storage Temperature	-40°C To +85°C	

Note:
1. 1/10 Duty Cycle, 0.1ms Pulse Width.

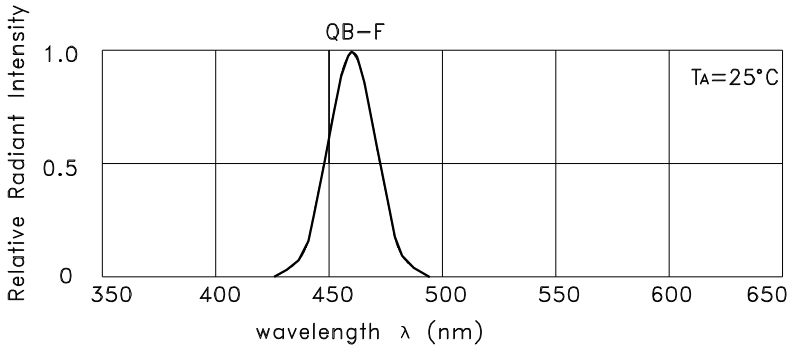

RELATIVE INTENSITY Vs. WAVELENGTH

Blue **KA-2810AQBS-F**

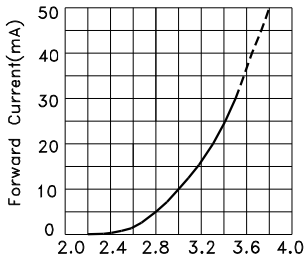

FORWARD CURRENT Vs.
FORWARD VOLTAGE

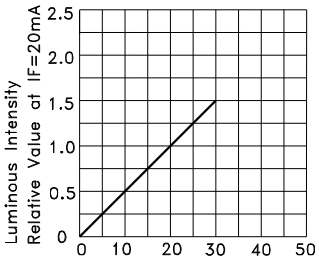

LUMINOUS INTENSITY Vs.
FORWARD CURRENT

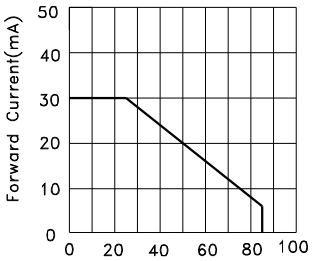

FORWARD CURRENT
DERATING CURVE

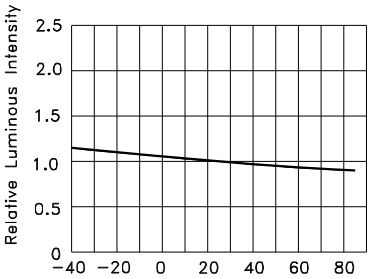

LUMINOUS INTENSITY Vs.
AMBIENT TEMPERATURE

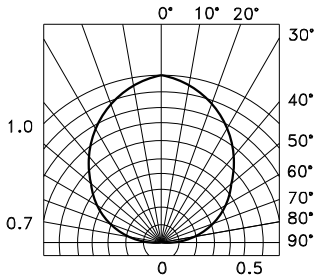

SPATIAL DISTRIBUTION

KA-2810AQBS-F

Reflow soldering is recommended and the soldering profile is shown below.
Other soldering methods are not recommended as they might cause damage to the product.

Reflow Soldering Profile For Lead-free SMT Process.

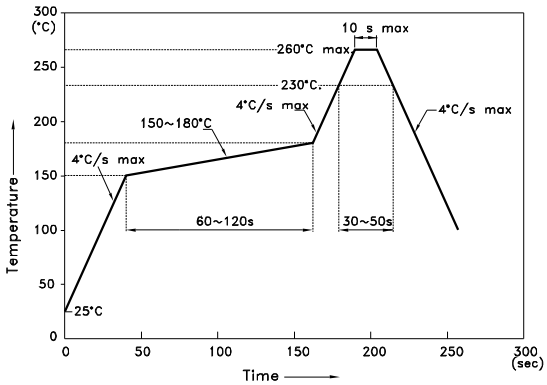

NOTES:
1. We recommend the reflow temperature 245°C(+/-5°C).The maximum soldering temperature should be limited to 260°C.
2. Don't cause stress to the epoxy resin while it is exposed to high temperature.
3. Number of reflow process shall be 2 times or less.

Recommended Soldering Pattern
(Units : mm; Tolerance: ± 0.1)

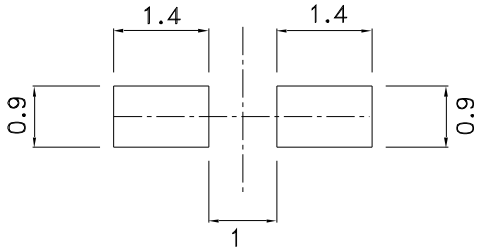

Reel Dimension

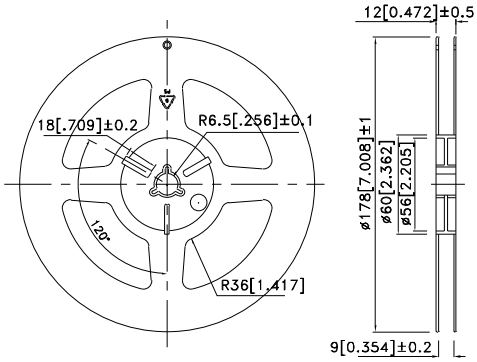

Tape Dimensions
(Units : mm)

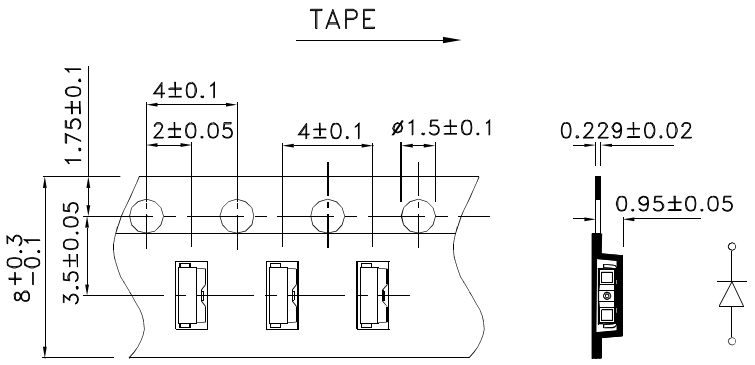

PACKING & LABEL SPECIFICATIONS **KA-2810AQBS-F**