EN: This Datasheet/Document is presented by the manufacturer.

Please visit our website for pricing and availability at www.hestore.hu.

PD - 94301A

International
IOR Rectifier

SMPS MOSFET

IRFP90N20D

HEXFET® Power MOSFET

Applications
- High frequency DC-DC converters

V_{DSS}	$R_{DS(on)}$ max	I_D
200V	0.023Ω	94A⑥

Benefits
- Low Gate-to-Drain Charge to Reduce Switching Losses
- Fully Characterized Capacitance Including Effective C_{OSS} to Simplify Design, (See App. Note AN1001)
- Fully Characterized Avalanche Voltage and Current



TO-247AC

Absolute Maximum Ratings

	Parameter	Max.	Units
I_D @ T_C = 25°C	Continuous Drain Current, V_{GS} @ 10V	94⑥	A
I_D @ T_C = 100°C	Continuous Drain Current, V_{GS} @ 10V	66	
I_{DM}	Pulsed Drain Current ①	380	
P_D @T_C = 25°C	Power Dissipation	580	W
	Linear Derating Factor	3.8	W/°C
V_{GS}	Gate-to-Source Voltage	± 30	V
dv/dt	Peak Diode Recovery dv/dt ③	6.7	V/ns
T_J	Operating Junction and	-55 to + 175	°C
T_{STG}	Storage Temperature Range		
	Soldering Temperature, for 10 seconds	300 (1.6mm from case)	
	Mounting torqe, 6-32 or M3 screw	10 lbf•in (1.1N•m)	

Thermal Resistance

	Parameter	Typ.	Max.	Units
$R_{\theta JC}$	Junction-to-Case	—	0.26	°C/W
$R_{\theta CS}$	Case-to-Sink, Flat, Greased Surface	0.24	—	
$R_{\theta JA}$	Junction-to-Ambient	—	40	

Notes ① through ⑥ are on page 8

Static @ T_J = 25°C (unless otherwise specified)

	Parameter	Min.	Typ.	Max.	Units	Conditions
$V_{(BR)DSS}$	Drain-to-Source Breakdown Voltage	200	—	—	V	V_{GS} = 0V, I_D = 250µA
$\Delta V_{(BR)DSS}/\Delta T_J$	Breakdown Voltage Temp. Coefficient	—	0.24	—	V/°C	Reference to 25°C, I_D = 1mA
$R_{DS(on)}$	Static Drain-to-Source On-Resistance	—	—	0.023	Ω	V_{GS} = 10V, I_D = 56A ④
$V_{GS(th)}$	Gate Threshold Voltage	3.0	—	5.0	V	V_{DS} = V_{GS}, I_D = 250µA
I_{DSS}	Drain-to-Source Leakage Current	—	—	25	µA	V_{DS} = 200V, V_{GS} = 0V
		—	—	250		V_{DS} = 160V, V_{GS} = 0V, T_J = 150°C
I_{GSS}	Gate-to-Source Forward Leakage	—	—	100	nA	V_{GS} = 30V
	Gate-to-Source Reverse Leakage	—	—	-100		V_{GS} = -30V

Dynamic @ T_J = 25°C (unless otherwise specified)

	Parameter	Min.	Typ.	Max.	Units	Conditions
g_{fs}	Forward Transconductance	39	—	—	S	V_{DS} = 50V, I_D = 56A
Q_g	Total Gate Charge	—	180	270	nC	I_D = 56A
Q_{gs}	Gate-to-Source Charge	—	45	67		V_{DS} = 160V
Q_{gd}	Gate-to-Drain ("Miller") Charge	—	87	130		V_{GS} = 10V, ④
$t_{d(on)}$	Turn-On Delay Time	—	23	—	ns	V_{DD} = 100V
t_r	Rise Time	—	160	—		I_D = 56A
$t_{d(off)}$	Turn-Off Delay Time	—	43	—		R_G = 1.2Ω
t_f	Fall Time	—	79	—		V_{GS} = 10V ④
C_{iss}	Input Capacitance	—	6040	—	pF	V_{GS} = 0V
C_{oss}	Output Capacitance	—	1070	—		V_{DS} = 25V
C_{rss}	Reverse Transfer Capacitance	—	170	—		f = 1.0MHz
C_{oss}	Output Capacitance	—	8350	—		V_{GS} = 0V, V_{DS} = 1.0V, f = 1.0MHz
C_{oss}	Output Capacitance	—	420	—		V_{GS} = 0V, V_{DS} = 160V, f = 1.0MHz
C_{oss} eff.	Effective Output Capacitance	—	870	—		V_{GS} = 0V, V_{DS} = 0V to 160V ⑤

Avalanche Characteristics

	Parameter	Typ.	Max.	Units
E_{AS}	Single Pulse Avalanche Energy②	—	1010	mJ
I_{AR}	Avalanche Current①	—	56	A
E_{AR}	Repetitive Avalanche Energy①	—	58	mJ

Diode Characteristics

	Parameter	Min.	Typ.	Max.	Units	Conditions
I_S	Continuous Source Current (Body Diode)	—	—	94⑥	A	MOSFET symbol showing the integral reverse p-n junction diode.
I_{SM}	Pulsed Source Current (Body Diode) ①	—	—	380		
V_{SD}	Diode Forward Voltage	—	—	1.5	V	T_J = 25°C, I_S = 56A, V_{GS} = 0V ④
t_{rr}	Reverse Recovery Time	—	230	340	ns	T_J = 25°C, I_F = 56A
Q_{rr}	Reverse RecoveryCharge	—	1.9	2.8	µC	di/dt = 100A/µs ④
t_{on}	Forward Turn-On Time	Intrinsic turn-on time is negligible (turn-on is dominated by L_S+L_D)				

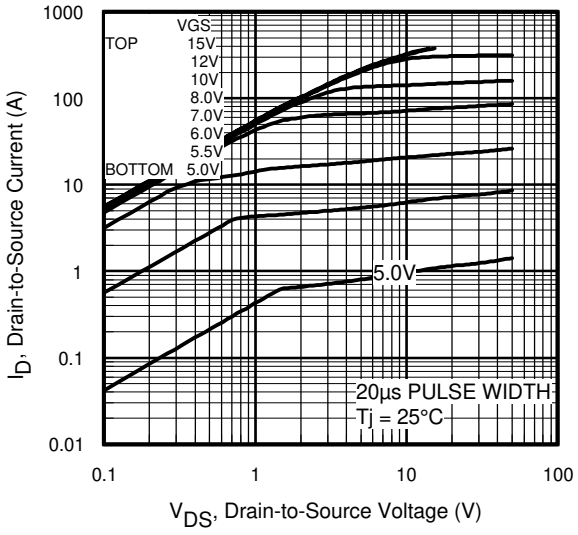

Fig 1. Typical Output Characteristics

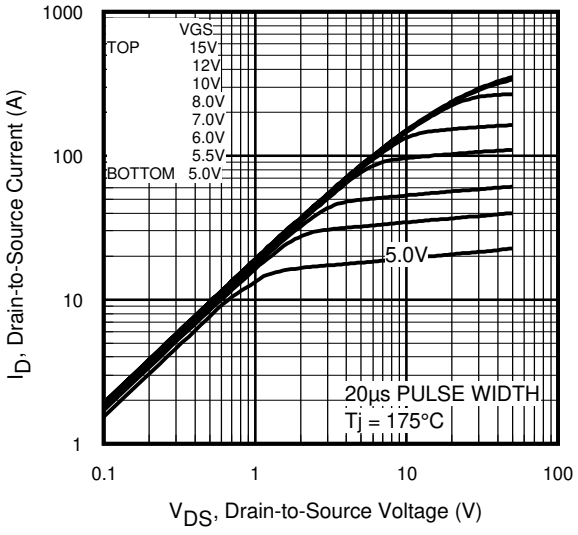

Fig 2. Typical Output Characteristics

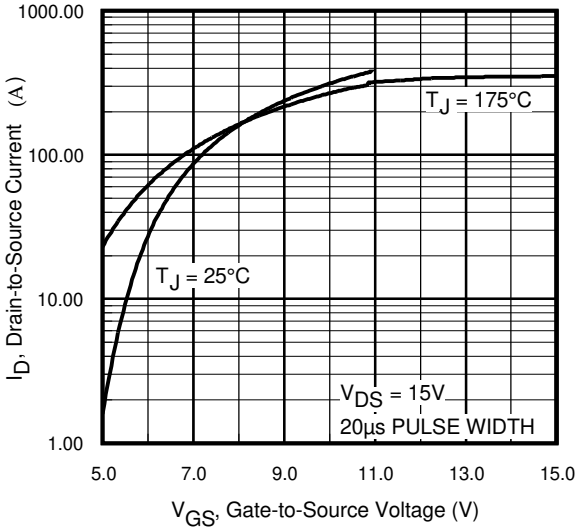

Fig 3. Typical Transfer Characteristics

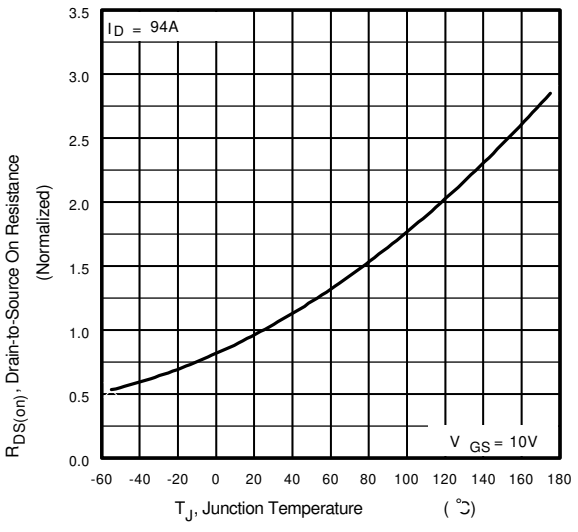

Fig 4. Normalized On-Resistance vs. Temperature

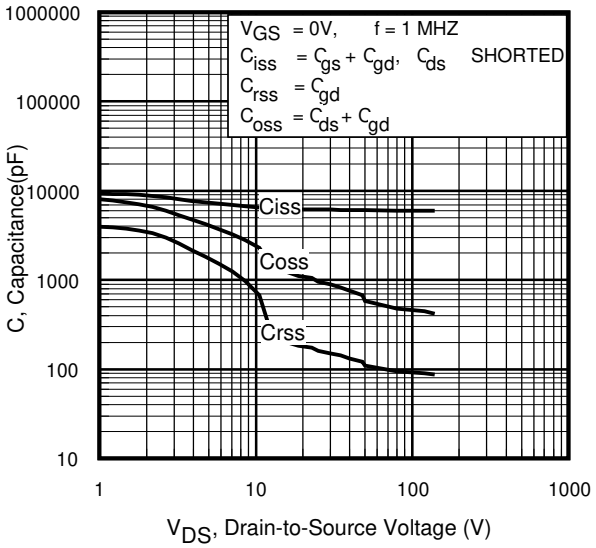

Fig 5. Typical Capacitance vs. Drain-to-Source Voltage

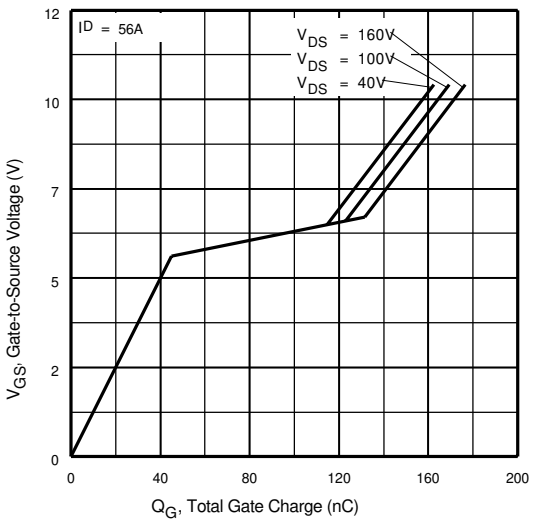

Fig 6. Typical Gate Charge vs. Gate-to-Source Voltage

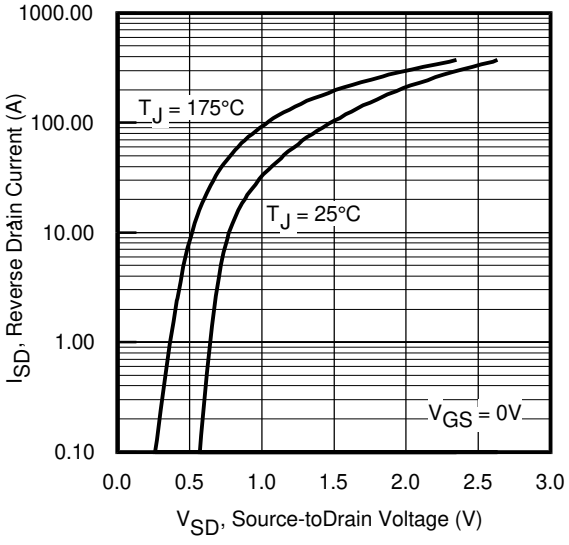

Fig 7. Typical Source-Drain Diode Forward Voltage

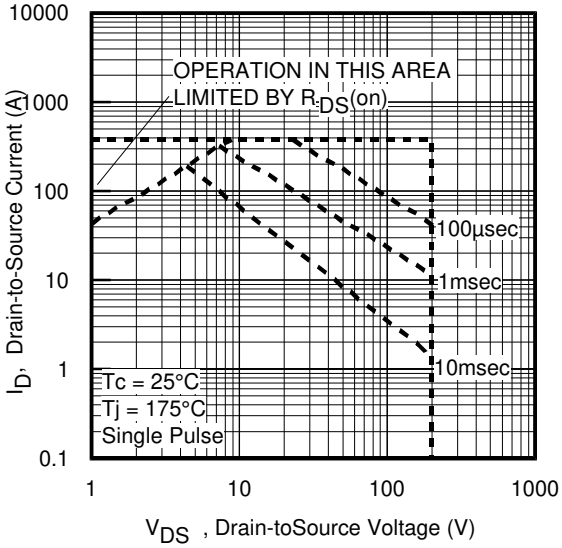

Fig 8. Maximum Safe Operating Area

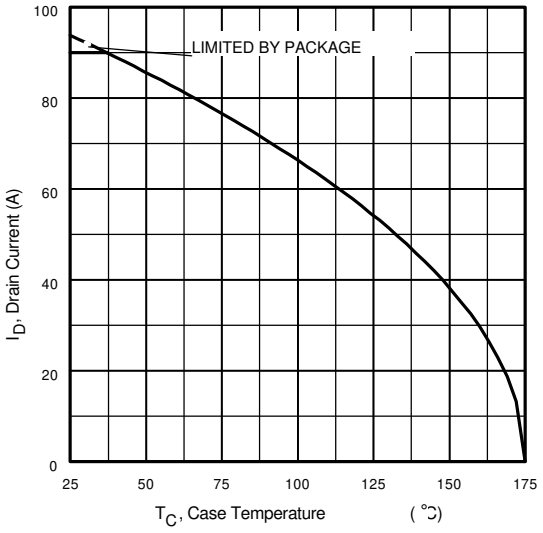

Fig 9. Maximum Drain Current vs. Case Temperature

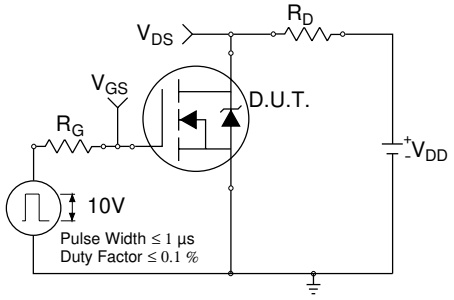

Fig 10a. Switching Time Test Circuit

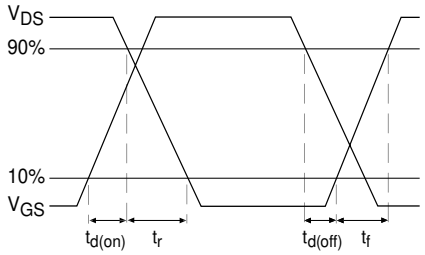

Fig 10b. Switching Time Waveforms

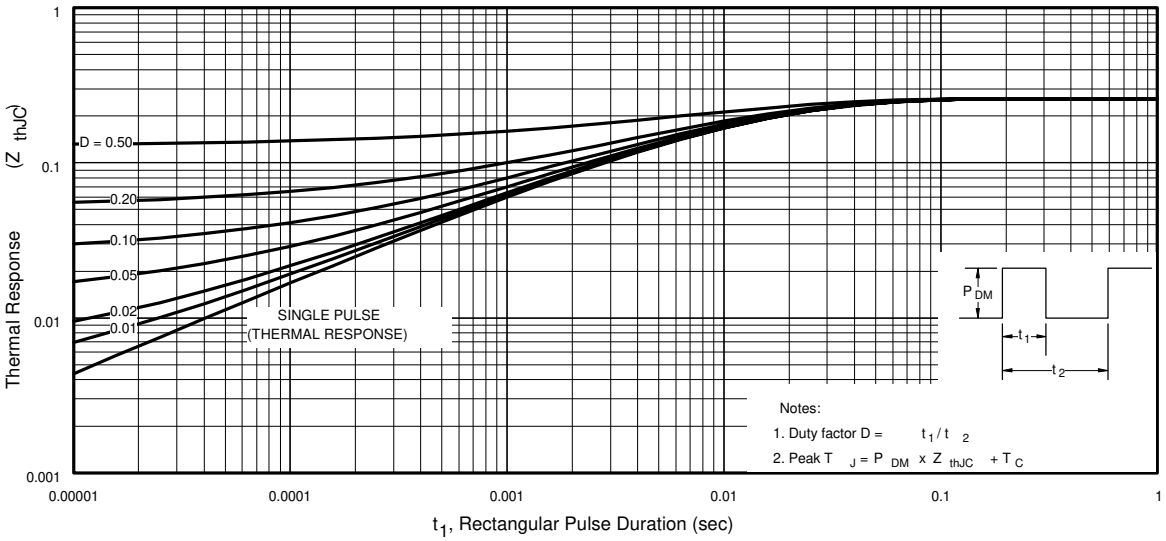

Fig 11. Maximum Effective Transient Thermal Impedance, Junction-to-Case

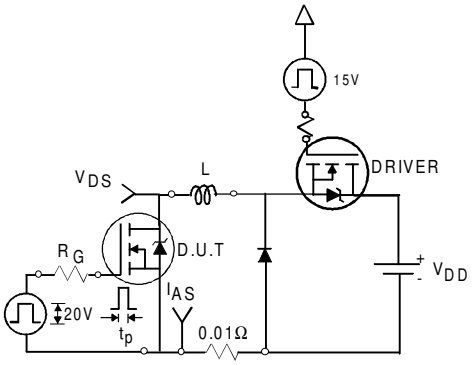

Fig 12a. Unclamped Inductive Test Circuit

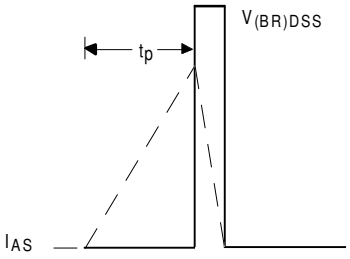

Fig 12b. Unclamped Inductive Waveforms

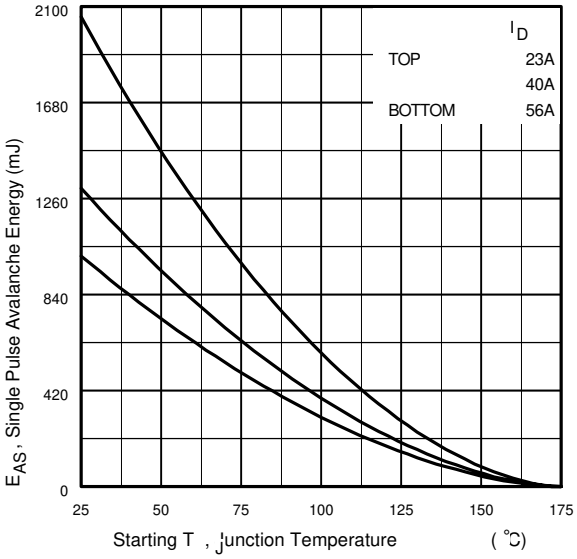

Fig 12c. Maximum Avalanche Energy vs. Drain Current

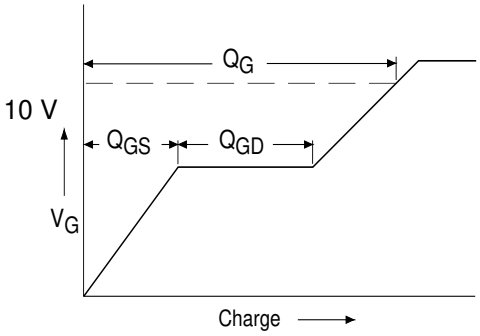

Fig 13a. Basic Gate Charge Waveform

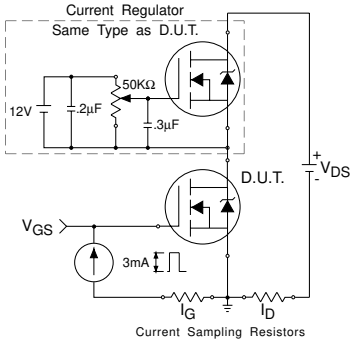

Fig 13b. Gate Charge Test Circuit

Peak Diode Recovery dv/dt Test Circuit

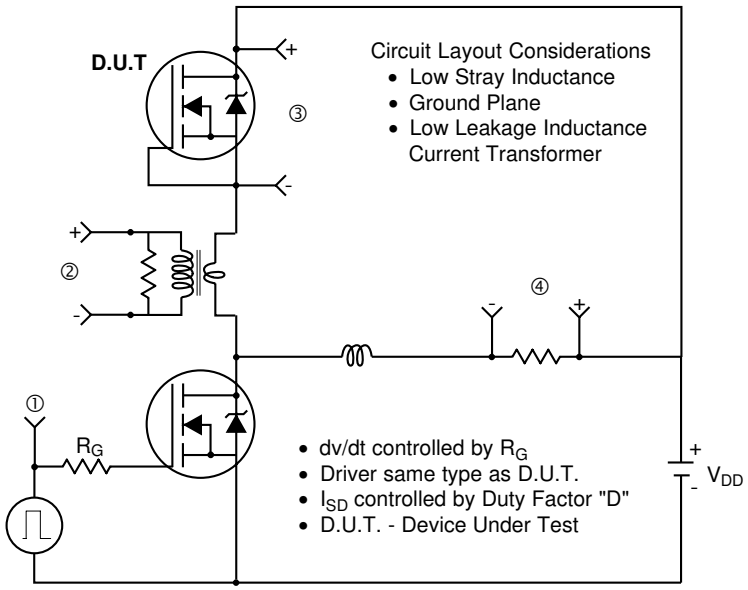

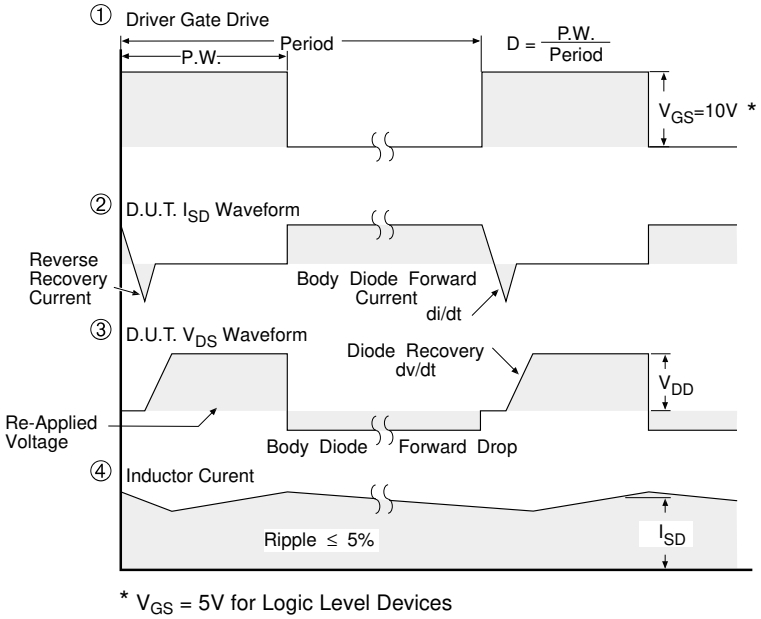

* V_{GS} = 5V for Logic Level Devices

Fig 14. For N-Channel HEXFET® Power MOSFETs

TO - 247 Package Outline

Dimensions are shown in millimeters (inches)

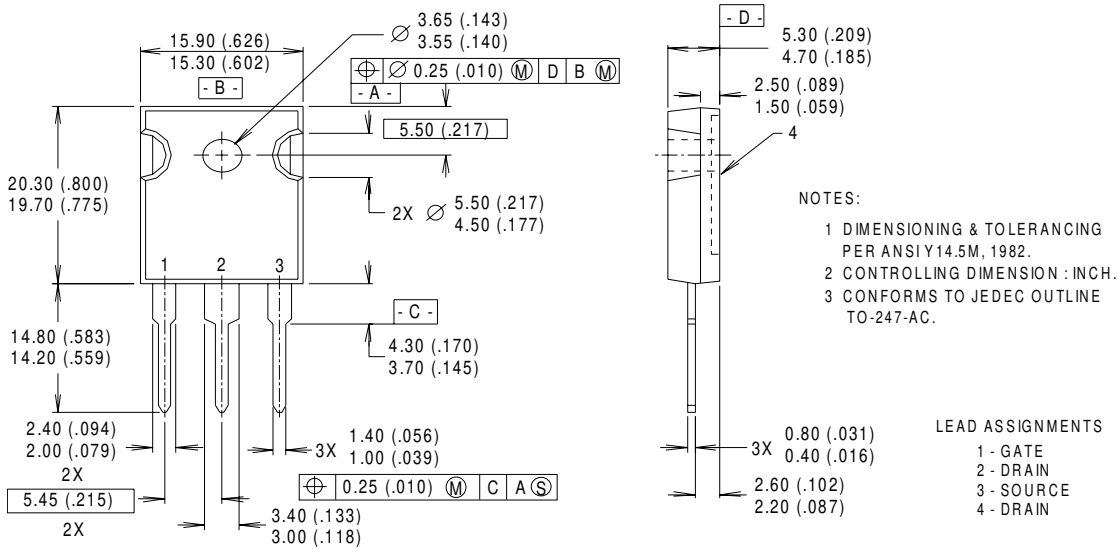

NOTES:

1 DIMENSIONING & TOLERANCING PER ANSI Y14.5M, 1982.
2 CONTROLLING DIMENSION : INCH.
3 CONFORMS TO JEDEC OUTLINE TO-247-AC.

LEAD ASSIGNMENTS

1 - GATE
2 - DRAIN
3 - SOURCE
4 - DRAIN

Notes:

① Repetitive rating; pulse width limited by max. junction temperature.

② Starting T_J = 25°C, L = 0.64mH R_G = 25Ω, I_{AS} = 56A.

③ I_{SD} ≤ 56A, di/dt ≤ 470A/µs, V_{DD} ≤ $V_{(BR)DSS}$, T_J ≤ 175°C

④ Pulse width ≤ 300µs; duty cycle ≤ 2%.

⑤ C_{oss} eff. is a fixed capacitance that gives the same charging time as C_{oss} while V_{DS} is rising from 0 to 80% V_{DSS}

⑥ Calculated continuous current based on maximum allowable junction temperature. Package limitation current is 90A.

Data and specifications subject to change without notice.
This product has been designed and qualified for the Industrial market.
Qualification Standards can be found on IR's Web site.

International
IOR Rectifier

IR WORLD HEADQUARTERS: 233 Kansas St., El Segundo, California 90245, USA Tel: (310) 252-7105
TAC Fax: (310) 252-7903
Visit us at www.irf.com for sales contact information.09/01

Note: For the most current drawings please refer to the IR website at:
http://www.irf.com/package/